> PRINT > COPY > SCAN > FAX

2552ci
3252ci
3552ci
4052ci
5052ci
6052ci

OPERATION GUIDE



KYOCERA
Document Solutions

Preface

Thank you for purchasing this machine.

This Operation Guide is intended to help you operate the machine correctly, perform routine maintenance, and take simple troubleshooting measures as needed so that the machine can always be used in the optimum condition.

Please read this Operation Guide before using the machine.

We recommend the use of our own brand supplies.

Please use our genuine toner containers, which have passed rigorous quality control testing.

The use of non-genuine toner containers may cause failure.

We will not be liable for any damages caused by the use of third party supplies in this machine.

A label is affixed to our genuine supplies, as shown below.

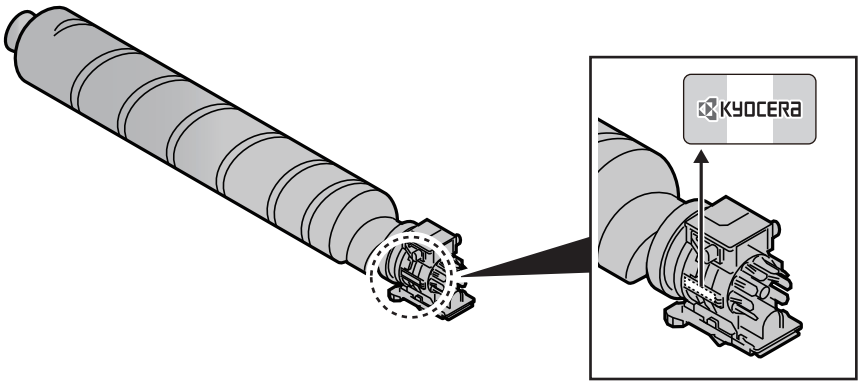

Checking the Equipment's Serial Number

The equipment's serial number is printed in the location shown in the figure.

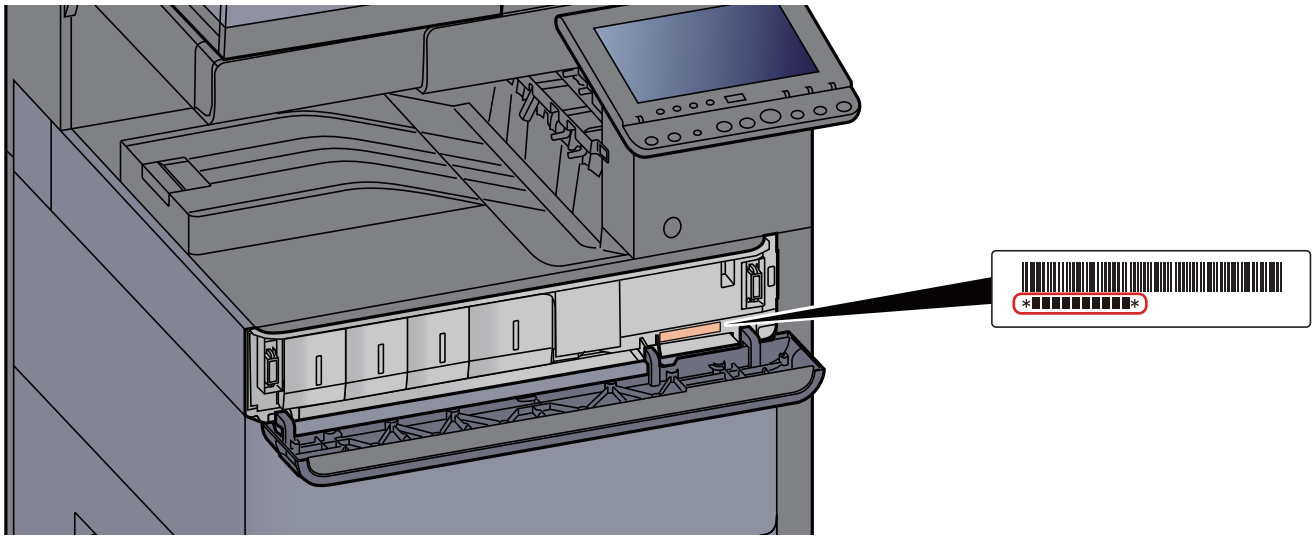

You'll need the equipment's serial number when contacting your Service Representative. Please check the number before contacting your Service Representative.

Contents

Preface ..... **i**
Contents ..... **ii**
Overview ..... **xi**
Machine Features ..... **xii**
Color and Image Quality Functions ..... **xvii**
Basic Color Modes xvii
Adjusting Image Quality and Color xviii
Guides Provided with the Machine ..... **xx**
About the Operation Guide (this Guide) ..... **xxii**
Structure of the guide xxii
Conventions Used in This Guide xxiii
Menu Map ..... **xxvi**

1 Legal and Safety Information 1-1

Notice **1-2**
Safety Conventions in This Guide 1-2
Environment 1-3
Precautions for Use 1-4
Laser Safety (Europe) 1-5
SAFETY OF LASER BEAM (USA) 1-6
Safety Instructions Regarding the Disconnection of Power 1-7
Compliance and Conformity 1-7
Radio Tag Technology 1-7
Other precautions (for users in California, the United States) 1-7
Warranty (the United States and Canada) 1-8
Legal Restriction on Copying/Scanning 1-10
EN ISO 7779 1-10
EK1-ITB 2000 1-10
Wireless Connection (Mexico only) 1-10
Security Precautions when Using Wireless LAN (If equipped) 1-10
Limited Use of This Product (If equipped) 1-11
Legal Information 1-12
Energy Saving Control Function 1-18
Automatic 2-Sided Print Function 1-18
Resource Saving - Paper 1-18
Environmental benefits of "Power Management" 1-18
Energy Star (ENERGY STAR®) Program 1-18

2 Installing and Setting up the Machine 2-1

Part Names (Machine Exterior) **2-2**
Part Names (Connectors/Interior) **2-4**
Part Names (With Optional Equipments Attached) **2-5**
Connecting the Machine and Other Devices **2-6**
Connecting Cables **2-7**
Connecting LAN Cable 2-7
Connecting USB Cable 2-8
Connecting the Power Cable 2-8
Power On/Off **2-9**
Power On 2-9
Power Off 2-9
Using the Operation Panel **2-10**
Operation Panel Keys 2-10
Adjusting the Operation Panel Angle 2-11
Assigning Functions to Function Keys 2-12
Touch Panel **2-14**
Home Screen 2-14

Display for Device Information 2-18
Display Setting Screen 2-18
Functions Key 2-19
Using the Screen 2-19
Display of Keys That Cannot Be Set 2-20
Original Preview 2-20
Entering Numbers 2-23
Using the Enter Key 2-24
Using the Quick No. Search Key 2-24
Help Screen 2-25
Accessibility Functions (Magnifying the View) 2-26
Login/Logout 2-27
Login 2-27
Logout 2-28
Default Settings of the Machine 2-29
Setting Date and Time 2-29
Network Setup 2-30
Configuring the Wired Network 2-30
Configuring the Wireless Network 2-32
Setting Wi-Fi Direct 2-36
Configuring NFC 2-38
Energy Saver Function 2-39
Low Power Mode 2-39
Sleep 2-39
Auto Sleep 2-40
Sleep Rules (models for Europe) 2-40
Sleep Level (Energy Saver) (models except for Europe) 2-40
Energy Saver Recovery Level 2-40
Weekly Timer Settings 2-40
Power Off Timer (models for Europe) 2-41
Quick Setup Wizard 2-42
Installing Software 2-45
Software on DVD (Windows) 2-45
Installing Software in Windows 2-46
Uninstalling the Software 2-51
Installing Software in Mac Computer 2-53
Setting TWAIN Driver 2-55
Setting WIA Driver 2-57
Checking the Counter 2-58
Additional Preparations for the Administrator 2-59
Sending Documents to a PC 2-59
Strengthening the Security 2-59
Command Center RX 2-61
Accessing Command Center RX 2-62
Changing Security Settings 2-63
Changing Device Information 2-64
E-mail Settings 2-65
Registering Destinations 2-69
Creating a New Custom Box 2-70
Printing a document stored in a Custom Box 2-71
Transferring Data from Our Other Products 2-73
Migrating the Address Book 2-73

3 Preparation before Use 3-1

Loading Paper 3-2
Precaution for Loading Paper 3-2
Selecting the Paper Feeder Units 3-3
Loading in Cassette 1 3-4
Loading in Cassette 2 3-7

Loading Envelopes or Cardstock in the Cassettes 3-10
Loading in the Large Capacity Feeder 3-14
Loading in the Side Feeder 3-16
Precautions for Outputting Paper 3-18
Paper Stopper 3-18
Envelope Stack Guide 3-18
Stack Level Adjuster 3-19
Preparation for Sending a Document to a Shared Folder in a PC 3-20
Making a note of the computer name and full computer name 3-20
Making a note of the user name and domain name 3-21
Creating a Shared Folder, Making a Note of a Shared Folder 3-22
Configuring Windows Firewall 3-25
Registering Destinations in the Address Book 3-30
Adding a Destination (Address Book) 3-30
Adding a Destination on One Touch Key (One Touch Key) 3-37

4 Printing from PC 4-1

Printer Driver Properties Screen 4-2
Displaying the Printer Driver Help 4-3
Changing the Default Printer Driver Settings (Windows 8.1) 4-3
Printing from PC 4-4
Printing on Standard Sized Paper 4-4
Printing on Non-standard Sized Paper 4-6
Banner Printing 4-9
Canceling Printing from a Computer 4-15
Printing from the Handheld Device 4-16
Printing by AirPrint 4-16
Printing by Google Cloud Print 4-16
Printing by Mopria 4-16
Printing with Wi-Fi Direct 4-16
Printing with NFC 4-17
Printing Data Saved in the Printer 4-18
Specifying the Job Box from a Computer and Storing the Job 4-18
Printing Documents from Private Print Box 4-19
Deleting the Documents Stored in the Private Print Box 4-19
Printing Document from Stored Job Box 4-20
Deleting the Documents Stored in the Stored Job Box 4-20
Printing Document from Quick Copy Box 4-21
Deleting the Documents Stored in the Quick Copy Box 4-21
Printing Document from Proof and Hold Box 4-22
Deleting the Documents Stored in the Proof and Hold Box 4-22
Monitoring the Printer Status (Status Monitor) 4-23
Accessing the Status Monitor 4-23
Exiting the Status Monitor 4-23
Quick View State 4-23
Printing Progress Tab 4-24
Paper Tray Status Tab 4-24
Toner Status Tab 4-24
Alert Tab 4-25
Status Monitor Context Menu 4-25
Status Monitor Notification Settings 4-26

5 Operation on the Machine 5-1

Loading Originals 5-2
Placing Originals on the Platen 5-2
Loading Originals in the Document Processor 5-4

Loading Paper in the Multi Purpose Tray 5-7
Program 5-11
Registering Programs 5-12
Recalling Programs 5-12
Editing Programs 5-13
Deleting Programs 5-13
Application 5-14
Installing Applications 5-14
Activating Applications 5-15
Deactivating Applications 5-16
Uninstalling Applications 5-17
Registering Shortcuts (Copy, Send, and Document Box Settings) 5-18
Adding Shortcuts 5-18
Editing Shortcuts 5-19
Deleting Shortcuts 5-19
Copying 5-20
Basic Operation 5-20
Proof Copy 5-22
Interrupt Copy 5-23
Canceling Jobs 5-23
Frequently-Used Sending Method 5-24
Sending Document via E-mail 5-25
Configuring Settings before Sending 5-25
Sending Scanned Document via E-mail 5-25
Sending Document to Desired Shared Folder on a Computer (Scan to PC) 5-26
Configuring Settings before Sending 5-26
Sending Document to Desired Shared Folder on a Computer 5-26
Sending Document to Folder on an FTP Server (Scan to FTP) 5-29
Configuring Settings before Sending 5-29
Sending Document to Folder on an FTP Server 5-29
Scanning using TWAIN or WIA 5-31
Configuring Settings before Sending 5-31
Scanning Document Using Application 5-31
Scanning Document stored in a Custom Box 5-32
Configuring Settings before Sending 5-32
Scanning Document Stored in a Box 5-32
Useful Sending Method 5-33
WSD Scan 5-34
Installing the Driver 5-34
Executing WSD scan 5-35
DSM Scan 5-37
Configuring Settings before Sending 5-37
Executing DSM Scan 5-37
Scanning with File Management Utility 5-39
Configuring Settings before Sending 5-39
Using FMU Connection to Scan an Original 5-39
Sending to Different Types of Destinations (Multi Sending) 5-40
Send to Me (E-mail) 5-41
Configuring Settings before Sending 5-41
Sending a Document to the Mail Address of the Logged In User 5-41
Canceling Sending Jobs 5-42
Handling Destination 5-43
Specifying Destination 5-43
Choosing from the Address Book 5-43
Choosing from the One Touch Key 5-45
Choosing from the Speed Dial 5-45
Checking and Editing Destinations 5-46
Confirmation Screen of Destinations 5-47
Recall 5-48

How to use the FAX Function 5-49
Using Document Boxes 5-50
What is Custom Box? 5-50
What is Job Box? 5-50
What is Removable Memory Box? 5-51
Fax Box 5-51
Basic Operation for Document Box 5-51
Creating a New Custom Box 5-55
Editing Custom Box 5-56
Deleting Custom Box 5-57
Storing Documents to a Custom Box 5-57
Printing Documents in Custom Box 5-58
Saving Scanned Documents to a Custom Box 5-59
Sending Documents in Custom Box 5-59
Sending Documents in Custom Box to E-mail Address of Logged In User. 5-60
Moving Documents in Custom Box 5-62
Copying Documents in Custom Box into Other Boxes 5-62
Copying Documents in Custom Box to Removable Memory 5-63
Joining Documents in Custom Box 5-63
Deleting Documents in Custom Box 5-64
Job Box 5-65
Outputting Repeat Copy Jobs 5-65
Form for Form Overlay 5-65
Operating using Removable USB Memory 5-67
Printing Documents Stored in Removable USB Memory 5-67
Saving Documents to USB Memory (Scan to USB) 5-69
Check the USB Memory Information 5-70
Removing USB Memory 5-70
Using the Internet Browser 5-71
Launching and Exiting the Browser 5-71
Using the Browser Screen 5-72
Manual Staple 5-73

6 Using Various Functions 6-1

Functions Available on the Machine 6-2
About Functions Available on the Machine 6-2
How to Select Functions 6-2
Copy 6-2
Send 6-5
Custom Box (Store File, Printing, Send) 6-8
Removable Memory (Store File, Printing Documents) 6-14
Functions 6-17
Original Size 6-18
Paper Selection 6-19
Mixed Size Originals 6-20
Original Orientation 6-23
Fold 6-24
Collate/Offset 6-25
Staple/Punch 6-26
Paper Output 6-30
Density 6-31
Original Image 6-31
EcoPrint 6-32
Color Selection 6-32
Color Balance 6-34
Hue Adjustment 6-35
One-touch Image Adjust 6-36
Sharpness 6-38
Contrast 6-38

Background Density Adj. (Background Density Adjustment) 6-39
Saturation 6-39
Prevent Bleed-thru 6-40
Trapping 6-40
Zoom 6-41
Combine 6-44
Margin/Centering, Margin, Centering 6-46
Border Erase 6-47
Booklet 6-49
Duplex 6-52
Cover 6-55
Form Overlay 6-56
Erase Shadowed Areas 6-57
Page # 6-57
Insert Sheets/Chapters 6-59
Memo Page 6-60
Poster 6-61
Image Repeat 6-62
Text Stamp 6-63
Bates Stamp 6-66
Continuous Scan 6-69
Auto Image Rotation 6-69
Negative Image 6-70
Mirror Image 6-70
Job Finish Notice 6-70
File Name Entry 6-71
Priority Override 6-71
Repeat Copy 6-72
OHP Backing Sheet 6-73
DP Read Action 6-74
Skip Blank Page 6-74
2-sided/Book Original, Book Original 6-75
Sending Size 6-76
File Format 6-77
File Separation 6-81
Scan Resolution 6-81
E-mail Subject/Body 6-82
Send and Print 6-82
Send and Store 6-82
FTP Encrypted TX 6-83
File Size Confirmation 6-83
Delete after Printed 6-83
Delete after Transmitted 6-83
Storing Size 6-84
Long Original 6-84
Encrypted PDF Password 6-85
JPEG/TIFF Print 6-85
XPS Fit to Page 6-85

7 Status/Job Cancel 7-1

Checking Job Status 7-2
Details of the Status Screens 7-3
Checking Detailed Information of Jobs 7-8
Checking Job History 7-9
Checking the Detailed Information of Histories 7-10
Sending the Log History 7-10
Job Operation 7-11
Pause and Resumption of Jobs 7-11
Canceling of Jobs 7-11

Priority Override for Waiting Jobs 7-11
Reordering Print Jobs 7-12
Device/Communication 7-13
Checking the Remaining Amount of Toner and Paper (Paper/Supplies) 7-14

8 Setup and Registration (System Menu) 8-1

System Menu 8-2
Operation Method 8-2
System Menu Settings 8-4
Counter 8-7
Cassette/MP Tray Settings 8-7
Common Settings 8-10
Home 8-32
Copy 8-33
Send 8-34
Document Box/Removable Memory 8-39
FAX 8-40
Printer 8-40
Report 8-43
System/Network 8-48
Edit Destination 8-67
User Login/Job Accounting 8-68
User Property 8-68
Date/Timer/Energy Saver 8-68
Adjustment/Maintenance 8-72
Internet 8-75
Application 8-75

9 User Authentication and Accounting (User Login, Job Accounting) .. 9-1

Overview of User Login Administration 9-2
Managing the Job Account from PC 9-2
Managing the Users to Use TWAIN for Scanning 9-2
Managing the Users to Use WIA for Scanning 9-2
Managing the Users to Send Faxes from a PC 9-2
Enabling User Login Administration 9-3
Setting User Login Administration 9-5
Authentication Security 9-5
Adding a User (Local User List) 9-8
Changing User Properties 9-12
User Login Administration for Printing 9-15
Managing the Users to Scan Using TWAIN 9-16
Managing the Users to Scan Using WIA 9-17
Managing the Users that Send Faxes from a PC 9-18
Local Authorization 9-19
Group Authorization Settings 9-20
Guest Authorization Set. 9-23
Obtain NW User Property 9-26
Simple Login Settings 9-28
ID Card Settings 9-31
PIN Code Authorization 9-32
Using User Login Administration 9-33
Login/Logout 9-33
Overview of Job Accounting 9-34
To Manage the Number of Sheets Used on Jobs Printed from a PC 9-34
Managing the Scan Job Account by Using TWAIN 9-34
Managing the Scan Job Account by Using WIA 9-34
Managing the FAX Job Transmitted from a PC 9-34

Enabling Job Accounting **9-35**
Job Accounting Access 9-36
Job Accounting (Local) **9-37**
Adding an Account 9-37
Restricting the Use of the Machine 9-39
Editing an Account 9-40
Deleting an Account 9-41
Job Accounting for Printing 9-42
Job Accounting for Scan Using TWAIN 9-43
Job Accounting for Scan Using WIA 9-44
Job Accounting for the FAX Transmitted from a Computer 9-45
Configuring Job Accounting **9-46**
Default Setting 9-46
Counting the Number of Pages Printed 9-49
Print Accounting Report 9-51
Using Job Accounting **9-52**
Login/Logout 9-52
Apply Limit **9-53**
Copy/Printer Count **9-54**
Unknown User Settings **9-55**
Unknown ID Job 9-55
Registering Information for a User whose ID is Unknown 9-56

10 Troubleshooting 10-1

Regular Maintenance **10-2**
Cleaning 10-2
Cleaning Glass Platen 10-2
Cleaning inside of the Document Processor 10-2
Cleaning Slit Grass 10-3
Toner Container Replacement 10-4
Replace the Waste Toner Box 10-7
Loading Paper 10-9
Replacing Staples (Inner Finisher) 10-10
Replacing Staples (1,000-Sheet Finisher) 10-12
Replacing Staples (4,000-Sheet Finisher) 10-13
Replacing Staples (Folding Unit) 10-15
Disposing of the Punch Waste 10-17
Troubleshooting **10-23**
Solving Malfunctions 10-23
Machine Operation Trouble 10-23
Printed Image Trouble 10-28
Color Printing Trouble 10-31
Responding to Messages 10-32
Adjustment/Maintenance **10-50**
Overview of Adjustment/Maintenance 10-50
Color Registration Procedure 10-50
Tone Curve Adjustment 10-54
Drum Refresh 10-55
Calibration 10-55
Laser Scanner Cleaning 10-56
Developer Refresh 10-56
Clearing Paper Jams **10-57**
Jam Location Indicators 10-57
Remove any jammed paper in Cassette 1 10-58
Remove any jammed paper in Cassette 2 10-61
Remove any jammed paper in Cassette 3 and 4 (500-sheet×2) 10-64
Remove any jammed paper in Cassette 3 (1,500-sheet×2) 10-66
Remove any jammed paper in Cassette 4 (1,500-sheet×2) 10-68
Remove any jammed paper in Cassette 5 (Side Feeder) 10-71

Remove any jammed paper in the Multi Purpose Tray 10-73
Remove any jammed paper in Right Cover 1 10-74
Remove any jammed paper in Right Cover 2 (500-sheet×2) 10-78
Remove any jammed paper in Right Cover 2 (1,500-sheet×2) 10-79
Remove any jammed paper in the Bridge Unit 10-81
Remove any jammed paper in the Mailbox 10-82
Remove any jammed paper in the Inner Finisher 10-83
Remove any jammed paper in the Document Processor (Reverse Automatic) 10-84
Remove any jammed paper in the Document Processor (Dual Scan) 10-86
Remove any jammed paper in the 1,000-Sheet Finisher 10-87
Remove any jammed paper in the 4,000-sheet Finisher (Inner) 10-90
Remove any jammed paper in the 4,000-sheet Finisher (Tray A) 10-91
Remove any jammed paper in the 4,000-sheet Finisher (Tray B) 10-95
Remove any jammed paper in the Folding Unit 10-98
Remove any jammed paper in the Folding Tray 10-103
Clearing a Staple Jam 10-108
Clearing a Staple Jam of the Inner Finisher 10-108
Clearing a Staple Jam of the 1,000-Sheet Finisher 10-110
Clearing a Staple Jam of the 4,000-Sheet Finisher 10-113
Clearing a Staple Jam of the Folding Unit 10-115

11 Appendix 11-1

Optional Equipment 11-2
Overview of Optional Equipment 11-2
Optional Applications 11-8
Starting Application Use 11-8
Checking Details of Application 11-9
Character Entry Method 11-10
Entry Screens 11-10
Entering Characters 11-12
Paper 11-13
Basic Paper Specifications 11-13
Choosing the Appropriate Paper 11-14
Special Paper 11-16
Specifications 11-20
Machine 11-20
Copy Functions 11-23
Printer Functions 11-25
Scanner Functions 11-26
Document Processor 11-26
Paper Feeder (500-sheet×2) 11-27
Large Capacity Feeder (1,500-sheet×2) 11-27
Side Feeder (3,000-sheet) 11-28
Inner Finisher 11-28
Punch Unit (For Inner Finisher) 11-28
1,000-Sheet Finisher 11-29
4,000-Sheet Finisher 11-29
Punch Unit (For 1,000-Sheet/4,000-Sheet Finisher) 11-30
Mailbox 11-30
Folding Unit 11-31
Job Separator Tray 11-31
Banner Tray 11-32
Glossary 11-33
Index Index-1

Overview

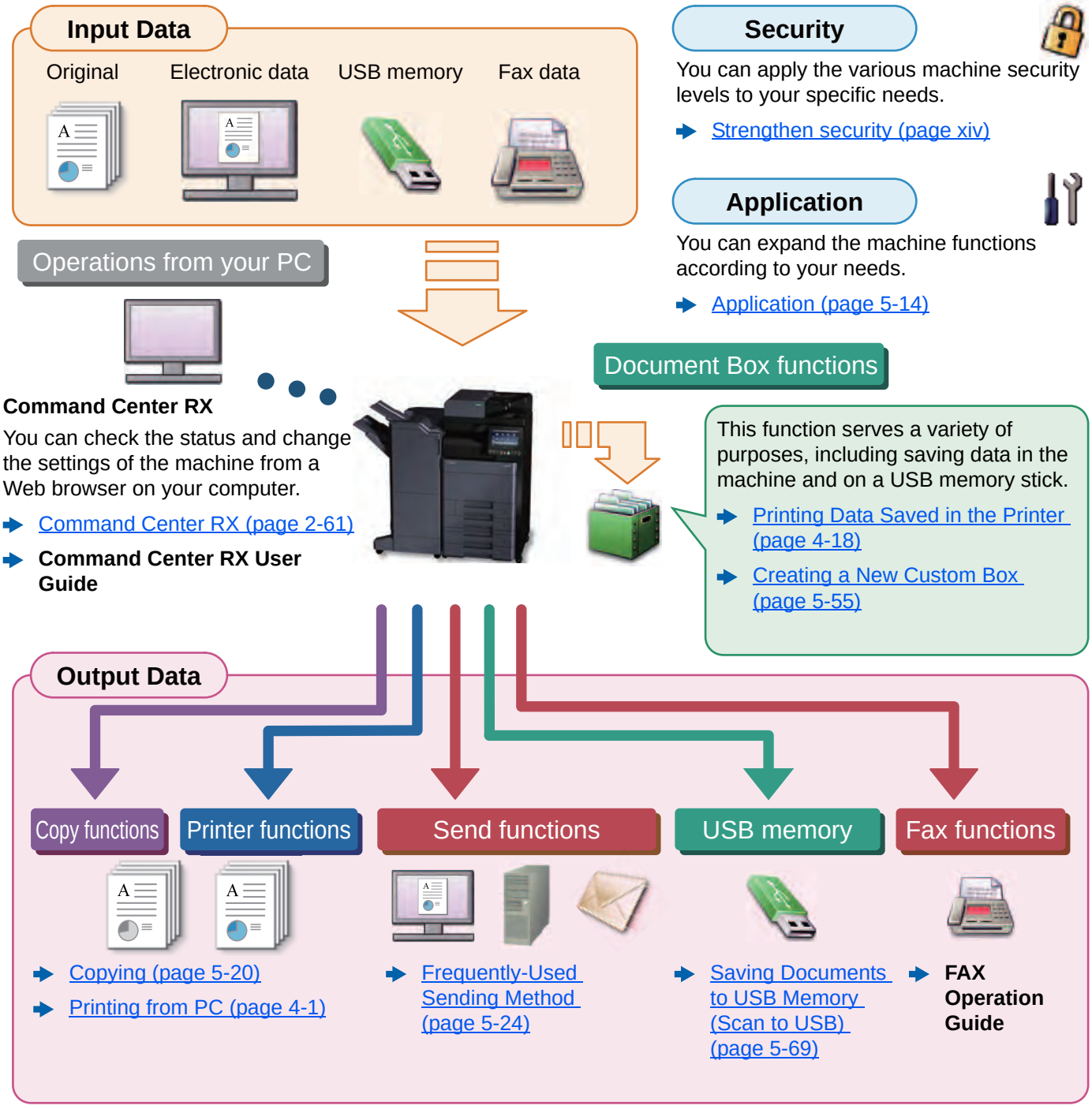

NOTE

- Before using the machine, be sure to read the following:
  - Legal and Safety Information (page 1-1)
- To prepare the device for use, including setting up cable connections and installing software.
  - Installing and Setting up the Machine (page 2-1)
- To learn how to load paper, set up shared folders, and add addresses to the address book, refer to the following:
  - Preparation before Use (page 3-1)

Machine Features

The machine is equipped with many useful functions.

Using Various Functions (page 6-1)

Here are some examples.

Optimize your office workflow		
Access to frequently used functions with just one touch (Favorites) 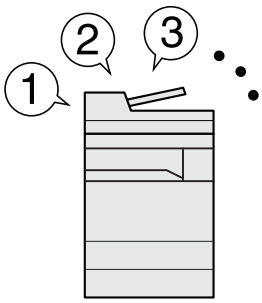 You can preset frequently used functions. Once you register frequently used settings as favorite, you can call up the settings easily. Using this favorite brings the same results even if operated by another person. Program (page 5-11)	**Interrupt other running jobs and execute your copy job immediately (Interrupt Copy)** 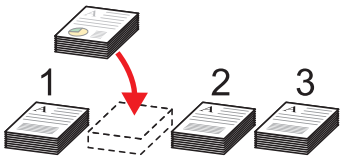 You can interrupt other running jobs and execute your copy job immediately. When other users are copying a large number of sheets, this function allows you to interrupt those jobs and make your copies immediately. When the interruption copy ends, the machine resumes the paused print jobs. Interrupt Copy (page 5-23)	**Check the finishing before copying a large number of sheets (Proof Copy)** 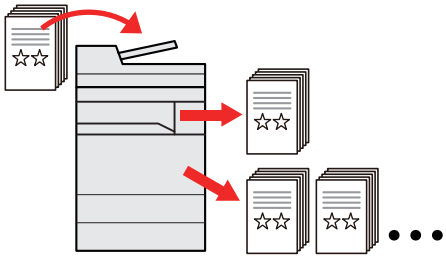 It is possible to copy one sheet before copying a large number of sheets. This enables you to check the contents and finishing and copy the desired number of sheets without scanning the original again if you are satisfied with the result. If you want to make changes, you can change the settings and copy only one sheet again. Proof Copy (page 5-22)

Optimize your office workflow		
Scan originals of different sizes at a time (Mixed Size Originals) 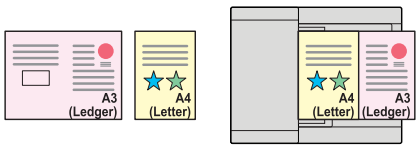 It is useful when preparing conference materials. You can set the different sized originals at one time so you don't need to reset the originals regardless of size. Mixed Size Originals (page 6-20)	**Scan a large number of originals in separate batches and produce as one job (Continuous Scan)** 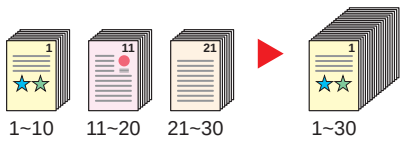 It is useful when preparing many-page handouts. When a large number of originals cannot be placed in the document processor at one time, the originals can be scanned in separate batches and then copied or sent as one job. Continuous Scan (page 6-69)	**Send one time with multiple sending options (Multi Sending)** 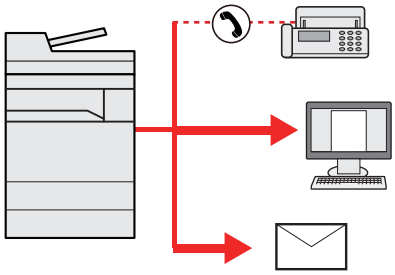 You can send a same document to the multiple destinations using a different method. You can specify multiple destinations of different send methods such as E-mail, SMB, and Fax. You can reduce your workflow by sending a job at once. Sending to Different Types of Destinations (Multi Sending) (page 5-40)

Optimize your office workflow	Save energy and cost	
Save frequently used documents in the machine (Custom Box)	**Save energy as needed (Energy Saver function)**	**Reduce paper use (Paper Saving Printing)**
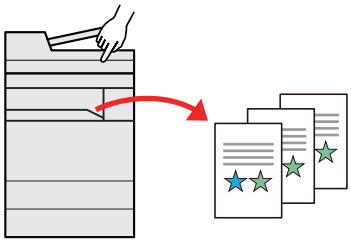	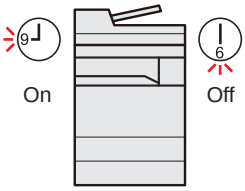	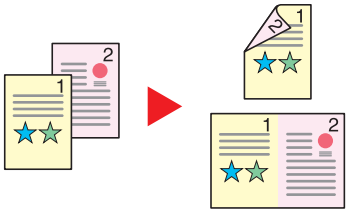
You can save the frequently used document in the machine and print it when needed. ➨ Creating a New Custom Box (page 5-55)	The machine is equipped with Energy Saver function that automatically switched into Low Power Mode or Sleep Mode. You can set appropriate Energy Saver Recovery Level depending on the operation. In addition, set the machine to automatically turn OFF and recovered at a specified time for each day of the week. ➨ Energy Saver Function (page 2-39)	You can print originals on both sides of the paper. You can also print multiple originals onto one sheet. ➨ Program (page 5-11)

Save energy and cost	Create attractive documents	
Skip blank pages when printing (Skip Blank Page)	**Prevent image bleed-through (Prevent Bleed-through)**	**Erase the extra shaded area (Erase Shadowed Areas)**
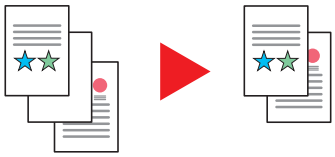	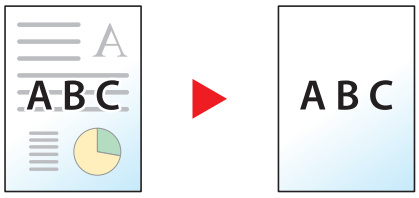	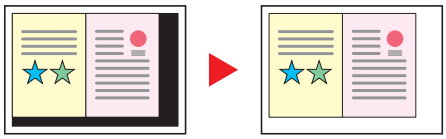
When there are blank pages in a scanned document, this function skips the blank pages and prints only pages that are not blank. ➨ Skip Blank Page (page 6-74)	You can prevent image bleed-through from the reverse side when scanning thin originals. ➨ Prevent Bleed-thru (page 6-40)	When scanning with the document processor or original cover open, erase the extra shaded area. ➨ Erase Shadowed Areas (page 6-57)

Create attractive documents

Create a booklet (Booklet)

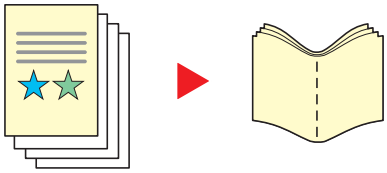

It is useful when preparing handout. You can create a magazine, pamphlet, or other booklet from sheet originals.

Facing-page, two-sided copies of originals can be folded down the center to create a booklet.

The cover page can be printed onto colored paper or heavy paper.

Booklet (page 6-49)

Print a stamp on copies (Text Stamp / Bates Stamp)



It is useful when adding text or date that is not included in originals.

You can add desired text and date as a stamp.

Text Stamp (page 6-63)
Bates Stamp (page 6-66)

Change appearance of image easily (One touch image adjust)

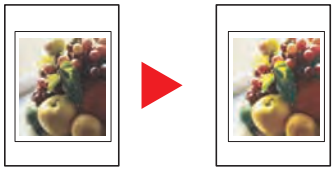

Change the appearance of image by using the preset settings.

You can change the appearance of image by simple operation without making fine adjustment.

One-touch Image Adjust (page 6-36)

Strengthen security

Password-protect a PDF file (PDF Encryption Functions)

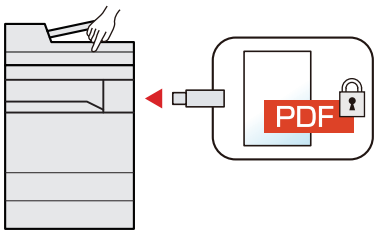

Use the PDF format's password security options to restrict document viewing, printing and editing.

Encrypted PDF Password (page 6-85)

Protect data on the hard disk/SSD (Encryption / Overwrite)

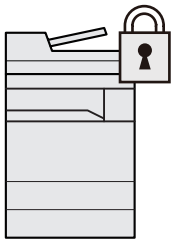

You can overwrite the unnecessary data that remains on the hard disk/ SSD automatically.

To prevent an external leakage, the machine is able to encrypt data before writing it to the hard disk/SSD.

Data Security (page 8-64)

Prevent loss of finished documents (Private Print)

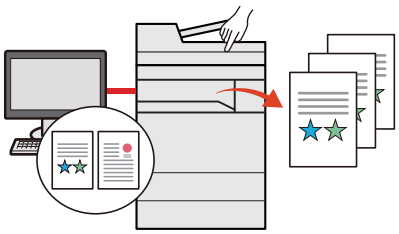

Temporarily saving print jobs in the main unit document box and outputting them when in front of the device can prevent documents from being taken by others.

Printing Data Saved in the Printer (page 4-18)

<table>
<tr><th colspan="2">Strengthen security</th><th>Use functions more efficiently</th></tr>
<tr>
<td>Log in by ID card
(Card Authentication)
 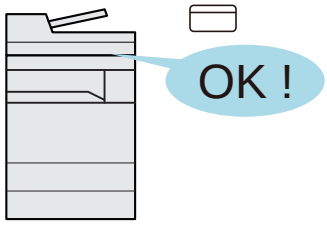

You can log in simply by touching an ID card. You don't need to enter your user name and password.
➡ Card Authentication Kit(B) "Card Authentication Kit" (page 11-6)</td>
<td>Strengthen security
(Settings for Administrator)
 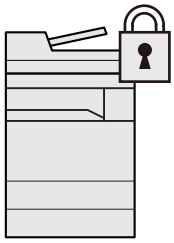
Various functions are available for administrators to strengthen security.
➡ Strengthening the Security (page 2-59)</td>
<td>Expand functions as necessary
(Application)
 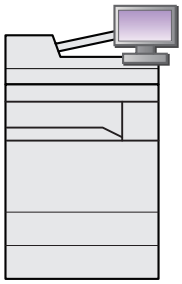
The functionality of the machine can be expanded by installing applications.
Applications that help you perform your daily more efficiently such as a scan feature and an authentication feature are available.
➡ Application (page 5-14)</td>
</tr>
</table>

<table>
<tr><th colspan="3">Use functions more efficiently</th></tr>
<tr>
<td>Display file size before sending / storing a job
(File Size Confirmation)
 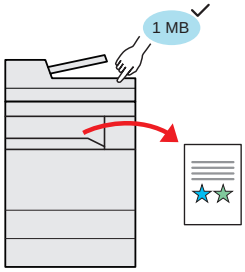

You can check the file size before sending/storing the document.
If your server specifies an e-mail size limit, you can check and change the size in advance.
➡ File Size Confirmation (page 6-83)</td>
<td>Install the machine without concerning the network cables
(Wireless Network)
 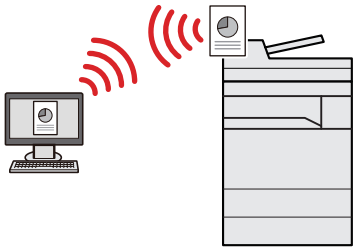
If there is a wireless LAN environment, it is possible to install the unit without worrying about the network wiring. In addition, Wi-Fi Direct, etc. are supported.
➡ Configuring the Wireless Network (page 2-32)
➡ Setting Wi-Fi Direct (page 2-36)
➡ Configuring NFC (page 2-38)</td>
<td>Use USB memory
(USB Memory)
 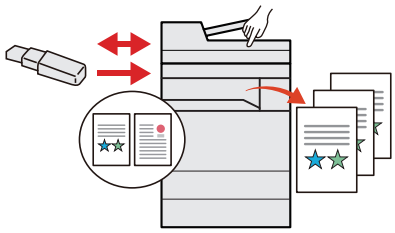
It is useful when you need to print documents outside your office or you cannot print documents from your PC.
You can print the document from the USB memory by plugging it directly into the machine.
Original scanned at the machine can be saved in the USB memory also.
➡ Printing Documents Stored in Removable USB Memory (page 5-67)
➡ Saving Documents to USB Memory (Scan to USB) (page 5-69)</td>
</tr>
</table>

Use functions more efficiently

Specify image file format (File Format)

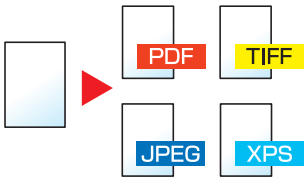

You can select the various file formats when sending/storing images.

File Format (page 6-77)

Scan the long originals (Long Original)

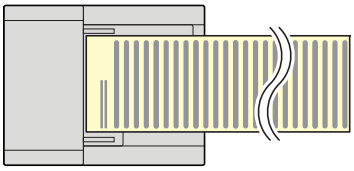

You can scan the long originals such as Contract and Data log.

Long Original (page 6-84)

Skip the error job (Job Skip Functions)

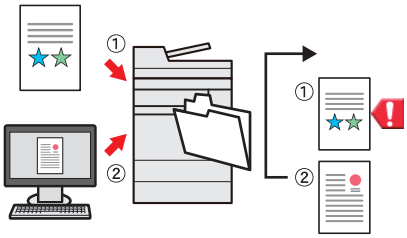

When paper empty error occurs at the cassette by specifying the special paper size or type, the machine skips the error job and perform the next job.

Error Job Skip (page 8-69)

Use functions more efficiently

Perform remote operation (Command Center RX)



You can access to the machine remotely to print, send or download data.

Administrators can configure the machine behavior or management settings.

Command Center RX (page 2-61)

Color and Image Quality Functions

The machine is equipped with various color and image quality functions. You can adjust the scanned image as desired.

Basic Color Modes

The basic color modes are as follows.

Color mode	Description	Reference image		Reference page
		Before	After	
Auto Color	Automatically recognizes whether a document being scanned is color or black & white.	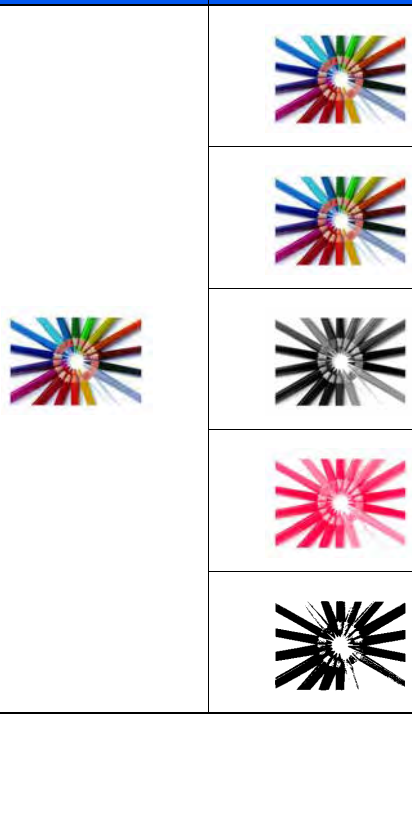		page 6-32
Full Color	Scans a document in full color.			page 6-32
Grayscale	Scans a document in grayscale.			page 6-33
Single Color	Prints in any desired color.			page 6-33
Black & White	Scans a document in black & white.			page 6-32

For details, refer to the following:

Color Selection (page 6-32)

Adjusting Image Quality and Color

To adjust the image quality or color of an image, use the following functions.

I want to...	Sample image		Function	Page
	Before	After		
Easily adjust the image quality to match your own image				
Adjust the skin color. **Example: Create a tanned effect.**			One Touch Image Adjust [Portrait Photo]	page 6-36
Adjust the blue landscape. **Example: Make the blue more vivid**			One Touch Image Adjust [Landscape Photo (Blue)]	page 6-36
Adjust the green landscape. **Example: Change to yellowgreen**			One Touch Image Adjust [Landscape Photo (Green)]	page 6-36
Produce overall image vividly.			One Touch Image Adjust [Vivid]	page 6-37
			Program [Vivid Copy]	page 5-11
Remove dark background or bleed-through from the original such as a newspaper.			Program [Newspaper Copy]	page 5-11
Clearly reproduce fine lines, faint lines, broken lines, and other fine details in a CAD or other drawings.	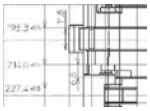	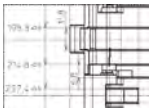	Program [Drawing Copy]	page 5-11
Clearly reproduce the text or colors of a highlighter.	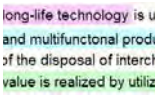	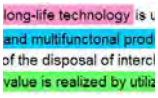	Program [Highlighter Copy]	page 5-11

I want to...	Sample image		Function	Page
	Before	After		
Adjust the color precisely.				
Adjust the density.			Density	page 6-31
Adjust the color by strengthening blue or red tones. **Example: Strengthening red**			Color Balance	page 6-34
Change the image by individually adjusting each of the six colors: red, blue, green, cyan, magenta, and yellow. **Example: Changing red tones close to yellow to yellow, and cyan tones close to blue to blue**			Hue adjustment	page 6-35
Adjust the saturation.			Saturation	page 6-39
Adjust the image quality precisely				
Emphasize or blur the image outline. **Example: Emphasize the image outlines**			Sharpness	page 6-38
Adjust the difference between dark and light parts of the image.			Contrast	page 6-38
Darken or lighten the background (the area with no texts or images) of a document. **Example: Lightening the background**			Background Density	page 6-39
Prevent bleed-through in 2-sided originals.		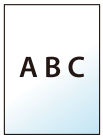	Prevent Bleed-through	page 6-40
Adjust the scanned image				
Decrease the file size and produce the characters clearly.		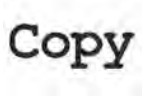	File format [High Comp. PDF]	page 6-77
Convert a paper document to PDF with searchable text.	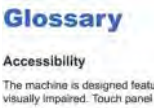		File format [PDF] or [High Comp. PDF] with [OCR]	page 6-77

Guides Provided with the Machine

The following guides are provided with the machine. Refer to each guide as needed.

The contents of the guides are subject to change without notice for the purpose of improvement of machine performance.

Printed Guides

Start using the machine quickly

Quick Guide

Explains how to use basic functions of the machine, how to use convenient features, how to perform routine maintenance, and what to do when problems occur.

For safe use of the machine

Safety Guide

Provides safety and cautionary information for installation environment and use of the machine. Be sure to read this guide before using the machine.

Safety Guide (2552ci/3252ci/3552ci/4052ci/5052ci/6052ci)

Indicates the space required for machine installation, and describes the cautionary labels and other safety information. Be sure to read this guide before using the machine.

Guides (PDF) on the DVD (Product Library)

Use the machine thoughtfully	**Operation Guide (This Guide)** Explains how to load paper and perform copy, print and scan operations, and indicates default settings and other information.
Use the fax functions	**FAX Operation Guide** Explains how to use the fax function.
Use the ID card	**Card Authentication Kit (B) Operation Guide** Explains how to perform authentication using the ID card.
Strengthen security	**Data Security Kit (E) Operation Guide** Explains how to introduce and use the Data Security kit (E), and how to overwrite and encrypt data.
Easily register machine information and configure settings	**Command Center RX User Guide** Explains how to access the machine from a Web browser on your computer to check and change settings.
Print data from a computer	**Printer Driver User Guide** Explains how to install the printer driver and use the printer function.
Directly print a PDF file	**KYOCERA Net Direct Print Operation Guide** Explains how to print PDF files without launching Adobe Acrobat or Reader.
Monitor the machine and printers on the network	**KYOCERA Net Viewer User Guide** Explains how to monitor your network printing system (the machine) with KYOCERA Net Viewer.
Scan images and save with information	**File Management Utility User Guide** Explains how to use File Management Utility to set various parameters and send and save scanned documents.
Print without using the printer driver	**PRESCRIBE Commands Command Reference** Describes the native printer language (PRESCRIBE commands). **PRESCRIBE Commands Technical Reference** Describes the PRESCRIBE command functions and control for each type of emulation.

Install the following versions of Adobe Reader to view the manuals on the DVD.

Version 8.0 or later

About the Operation Guide (this Guide)

Structure of the guide

The Operation Guide contains the following chapters.

Chapter		Contents
1	**Legal and Safety Information**	Provides precautions regarding use of the machine and trademark information.
2	**Installing and Setting up the Machine**	Explains part names, cable connections, installation of the software, login, logout, and other matters related to administration of the machine.
3	**Preparation before Use**	Explains preparations and settings that are required in order to use the machine, such as how to load paper and create an address book.
4	**Printing from PC**	Explains functions that are available when the machine is used as a printer.
5	**Operation on the Machine**	Explains the basic procedures for using the machine, such as placing originals, making copies, sending documents, and using document boxes.
6	**Using Various Functions**	Explains convenient functions that are available on the machine.
7	**Status/Job Cancel**	Explains how to check the status of a job and the job history, and how to cancel jobs being printed or waiting to print. Also explains how to check paper and toner levels, how to check the device status, and how to cancel fax transmission.
8	**Setup and Registration (System Menu)**	Explains System Menu and how it relates to the operation of the machine.
9	**User Authentication and Accounting (User Login, Job Accounting)**	Explains user login and job accounting.
10	**Troubleshooting**	Explains what to do when toner runs out, an error is displayed, or a paper jam or other problem occurs.
11	**Appendix**	Describes convenient options that are available for the machine. Provides information on media types and paper sizes, and gives a glossary of terms. Explains how to enter characters, and lists the specifications of the machine.

Conventions Used in This Guide

Adobe Reader XI is used as an example in the explanations below.

Click an item in the Table of Contents to jump to the corresponding page.

Click to move from the current page to the previously displayed page. This is convenient when you want to return to the page from which you jumped to the current page.

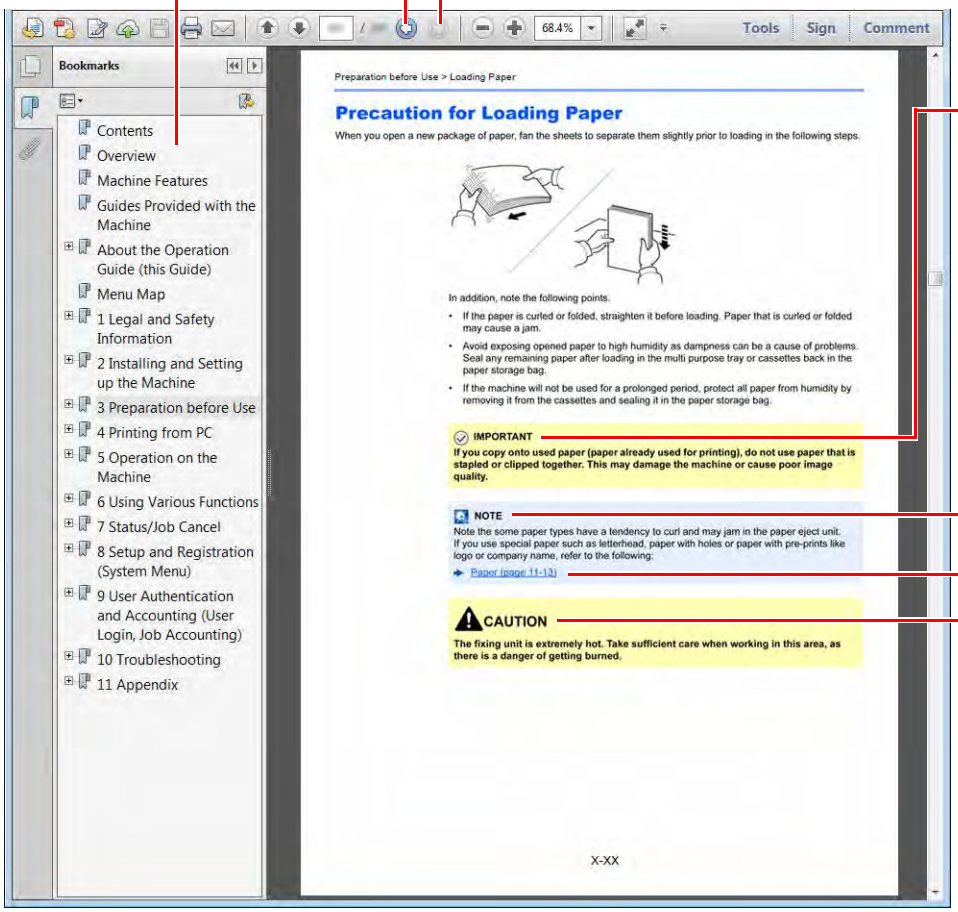

IMPORTANT

Indicates operational requirements and restrictions to operate the machine correctly, and avoid damage to the machine or property.

NOTE

Indicates supplemental explanations and reference information for operations.

Refer to

Click the underlined text to jump to the corresponding page.

CAUTION

Indicates that personal injury or mechanical damage may result from insufficient attention to or incorrect compliance with the related points.

NOTE

The items that appear in Adobe Reader vary depending on how it is used. If the Table of Contents or tools do not appear, refer to Adobe Reader Help.

Certain items are indicated in this guide by the conventions described below.

Convention	Description
[**Bold**]	Indicates keys and buttons.
"Regular"	Indicates a message or setting.

Conventions Used in Procedures for Operating the Machine

In this Operation Guide, continuous operation of the keys on the touch panel is as follows:

Actual procedure	Procedure indicated in this guide
Select the [**System Menu/Counter**] key. ▼ Select [∨]. ▼ Select [**Common Settings**]. ▼ Select [**Sound**].	[**System Menu/Counter**] key > [**Common Settings**] > [**Sound**]
Select [**Next**] of "Job Accounting Settings". 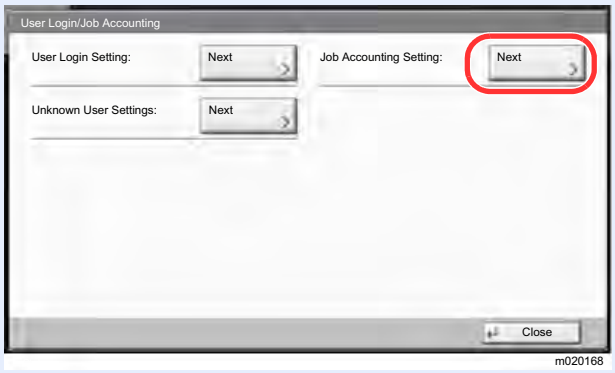 ▼ Select [**Change**] of "Job Accounting ". 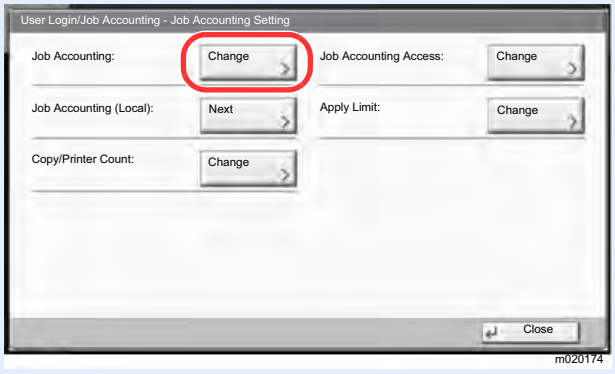	"Job Accounting Settings" [**Next**] > "Job Accounting" [**Change**]

Size and Orientation of Originals and Paper

Original sizes and paper sizes such as A4, B5, and Letter can be used in both the horizontal and vertical orientations. To distinguish the orientations when these sizes are used, "R" is added to sizes used in the horizontal orientation. In addition, the following icons are used to indicate original and paper placement orientations on the touch panel.

Orientation		Setting Position (X=Length, Y=Width)	Icons on the touch panel	Indicated size in this Guide*1
Vertical orientation	Original	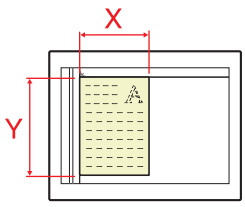 Original	 Original	A4, B5, Letter .etc
	Paper	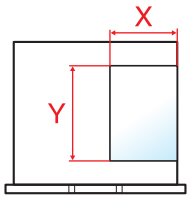 Paper	 Paper	
Horizontal orientation (-R)	Original	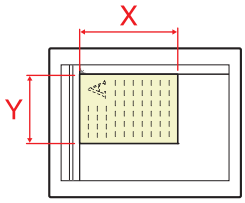 Original	 Original	A4-R, B5-R, Letter-R .etc
	Paper	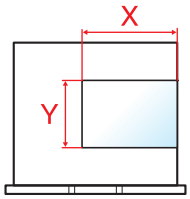 Paper	 Paper	

*1 Original/paper sizes that can be used vary depending on the function and source tray. For details, refer to the following.

Specifications (page 11-20)

Menu Map

This is a list of menus displayed on the touch panel. Depending on the settings, some menus may not be displayed. Some menu names may differ from their reference titles.

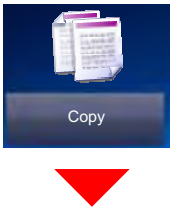

Org./Paper/Finishing	Original Size (page 6-18)	
	Paper Selection (page 6-19)	
	Mixed Size Originals (page 6-20)	
	Original Orientation (page 6-23)	
	Collate/Offset (page 6-25)	
	Fold (page 6-24)	
	Staple/Punch	Staple (page 6-26)
		Punch (page 6-28)
	Paper Output (page 6-30)	
Color/Image Quality	Density (page 6-31)	
	Original Image (page 6-31)	
	EcoPrint (page 6-32)	
	Color Selection (page 6-32)	
	Color Balance (page 6-34)	
	Hue Adjustment (page 6-35)	
	One-touch Image Adjust (page 6-36)	
	Sharpness (page 6-38)	
	Background Density Adj. (page 6-39)	
	Saturation (page 6-39)	
	Prevent Bleed-thru (page 6-40)	
	Contrast (page 6-38)	
	Trapping (page 6-40)	

Layout/Edit	Zoom (page 6-41)
	Combine (page 6-44)
	Margin/Centering (page 6-44)
	Border Erase (page 6-47)
	Booklet (page 6-49)
	Duplex (page 6-52)
	Form Overlay (page 6-56)
	Erase Shadowed Area (page 6-57)
	Page # (page 6-57)
	Cover (page 6-55)
	Insert Sheets/Chapters (page 6-59)
	Image Repeat (page 6-62)
	Text Stamp (page 6-63)
	Bates Stamp (page 6-66)
	Memo Page (page 6-60)
	Poster (page 6-61)
Advanced Setup	Continuous Scan (page 6-69)
	Auto Image Rotation (page 6-69)
	Negative Image (page 6-70)
	Mirror Image (page 6-70)
	Job Finish Notice (page 6-70)
	File Name Entry (page 6-71)
	Priority Override (page 6-71)
	Repeat Copy (page 6-72)
	OHP Backing Sheet (page 6-73)
	DP Read Action (page 6-74)
	Skip Blank Page (page 6-74)
Program (page 5-11)	



Destination	Address Book (page 5-43)
	E-mail Addr Entry (page 5-25)
	Folder Path Entry (page 5-26, page 5-29)
	FAX No. Entry (refer to **FAX Operation Guide**)
	i-FAX Address Entry (refer to **FAX Operation Guide**)
	WSD Scan (page 5-34) / DSM Scan (page 5-37)
Org./Sending Data Format	Original Size (page 6-18)
	Mixed Size Originals (page 6-20)
	2-sided/Book Original, Book Original (page 6-75)
	Original Orientation (page 6-23)
	Sending Size (page 6-76)
	File Format (page 6-77)
	File Separation (page 6-81)
	Long Original (page 6-84)
Color/Image Quality	Density (page 6-31)
	Original Image (page 6-31)
	Scan Resolution (page 6-81)
	FAX TX Resolution (refer to **FAX Operation Guide**)
	Color Selection (page 6-32)
	Sharpness (page 6-38)
	Background Density Adj. (page 6-39)
	Prevent Bleed-thru (page 6-40)
	Contrast (page 6-38)

Advanced Setup	Zoom (page 6-41)
	Centering (page 6-44)
	Border Erase (page 6-47)
	FAX Delayed Transmission (refer to **FAX Operation Guide**)
	Continuous Scan (page 6-69)
	Job Finish Notice (page 6-70)
	Erase Shadowed Area (page 6-57)
	File Name Entry (page 6-71)
	i-FAX Subject/Body (refer to **FAX Operation Guide**)
	FAX Direct Transmission (refer to **FAX Operation Guide**)
	FAX Polling RX (refer to **FAX Operation Guide**)
	Send and Print (page 6-82)
	Send and Store (page 6-82)
	FTP Encrypted TX (page 6-83)
	Text Stamp (page 6-63)
	Bates Stamp (page 6-66)
	File Size Confirmation (page 6-83)
	FAX TX Report (refer to **FAX Operation Guide**)
	Skip Blank Page (page 6-74)
	E-mail Subject/Body (page 6-82)
Program (page 5-11)	



Custom Box	**Store File**	**Functions**	Original Size (page 6-18)
			Mixed Size Originals (page 6-20)
			2-sided/Book Original, Book Original (page 6-75)
			Original Orientation (page 6-23)
			Storing Size (page 6-84)
			Prevent Bleed-thru (page 6-40)
			Density (page 6-31)
			Original Image (page 6-31)
			Scan Resolution (page 6-81)
			Color Selection (page 6-32)
			Sharpness (page 6-38)
			Background Density Adj. (page 6-39)
			Zoom (page 6-41)
			Centering (page 6-44)
			Border Erase (page 6-47)
			Continuous Scan (page 6-69)
			Job Finish Notice (page 6-70)
			File Name Entry (page 6-71)
			Erase Shadowed Area (page 6-57)
			Skip Blank Page (page 6-74)
			Contrast (page 6-38)
		Program (page 5-11)	
	Detail (page 5-51)		

Custom Box	**Open**	**Print**	**Functions**	Paper Selection (page 6-19)	
				Collate/Offset (page 6-25)	
				Staple/Punch (page 6-26)	Staple (page 6-26)
					Punch (page 6-28)
				Paper Output (page 6-30)	
				Combine (page 6-44)	
				Margin/Centering (page 6-46)	
				Booklet (page 6-49)	
				Duplex (page 6-52)	
				Cover (page 6-55)	
				Form Overlay (page 6-56)	
				Page # (page 6-57)	
				Job Finish Notice (page 6-70)	
				File Name Entry (page 6-71)	
				Delete after Printed (page 6-83)	
				Priority Override (page 6-71)	
				EcoPrint (page 6-32)	
				Zoom (page 6-41)	
				Fold (page 6-24)	
				Text Stamp (page 6-63)	
				Bates Stamp (page 6-66)	
				Color Balance (page 6-34)	
				Hue Adjustment (page 6-35)	
				One-touch Image Adjust (page 6-36)	
				Saturation (page 6-39)	
				Trapping (page 6-40)	
			Color/Image Quality	Density (page 6-31)	
				Original Image (page 6-31)	
				Color Selection (page 6-32)	
				Sharpness (page 6-38)	
				Background Density Adj. (page 6-39)	
				Prevent Bleed-thru (page 6-40)	
				Contrast (page 6-38)	
			Program (page 5-11)		

Custom Box	**Open**	**Send**	Destination (page 5-43)	
			Functions	Sending Size (page 6-76)
				File Format (page 6-77)
				FAX TX Resolution (refer to **FAX Operation Guide**)
				Centering (page 6-44)
				FAX Delayed Transmission (refer to **FAX Operation Guide**)
				Job Finish Notice (page 6-70)
				File Name Entry (page 6-71)
				E-mail Subject/Body (page 6-82)
				i-FAX Subject/Body (refer to **FAX Operation Guide**)
				FTP Encrypted TX (page 6-83)
				Delete after Transmitted (page 6-83)
				Zoom (page 6-41)
				File Separation (page 6-81)
				Text Stamp (page 6-63)
				Bates Stamp (page 6-66)
				File Size Confirmation (page 6-83)
				FAX TX Report (refer to **FAX Operation Guide**)
			Color/Image Quality	Density (page 6-31)
				Original Image (page 6-31)
				Resolution (page 6-81)
				Color Selection (page 6-32)
				Sharpness (page 6-38)
				Background Density Adj. (page 6-39)
				Prevent Bleed-thru (page 6-40)
				Contrast (page 6-38)
			Program (page 5-11)	

Custom Box	**Open**	Join (page 5-65)
		Move/Copy (page 5-62)
		Delete (page 5-64)
		Store File (page 5-57)
		Search(Name) (page 5-51)
		Page Selection (page 5-51)
		Detail (page 5-51)
		Preview (page 5-54)
	Search(Name) (page 5-51)	
	Search(No.) (page 5-51)	
	Add/Edit Box (page 5-55)	

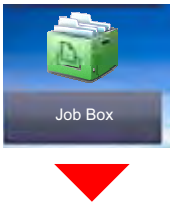

Job Box	Private Print/Stored Job (page 4-19, page 4-20)
	Quick Copy/Proof and Hold (page 4-21, page 4-22)
	Repeat Copy (page 6-72)
	Form for Form Overlay (page 5-65)

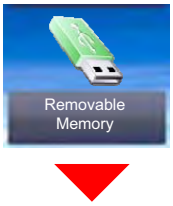

Removable Memory	**Print**	**Functions**	Paper Selection (page 6-19)	
			Collate/Offset (page 6-25)	
			Staple/Punch (page 6-26)	Staple (page 6-26)
				Punch (page 6-28)
			Paper Output (page 6-30)	
			Margin (page 6-46)	
			Duplex (page 6-52)	
			Job Finish Notice (page 6-70)	
			Priority Override (page 6-71)	
			EcoPrint (page 6-32)	
			Fold (page 6-24)	
			Text Stamp (page 6-63)	
			Bates Stamp (page 6-66)	
			Encrypted PDF Password (page 6-85)	
			JPEG/TIFF Print (page 6-85)	
			XPS Fit to Page (page 6-85)	
		Color/Image Quality	Color Selection (page 6-32)	

Removable Memory	**Store File**	**Functions**	Original Size (page 6-18)
			Mixed Size Originals (page 6-20)
			2-sided/Book Original, Book Original (page 6-75)
			Original Orientation (page 6-23)
			Storing Size (page 6-84)
			Prevent Bleed-thru (page 6-40)
			Density (page 6-31)
			Original Image (page 6-31)
			Scan Resolution (page 6-81)
			Color Selection (page 6-32)
			Sharpness (page 6-38)
			Background Density Adj. (page 6-39)
			Zoom (page 6-41)
			Centering (page 6-44)
			Border Erase (page 6-47)
			Continuous Scan (page 6-69)
			Job Finish Notice (page 6-70)
			File Name Entry (page 6-71)
			Erase Shadowed Area (page 6-57)
			Skip Blank Page (page 6-74)
			Contrast (page 6-38)
			Text Stamp (page 6-63)
			Bates Stamp (page 6-66)
			File Format (page 6-77)
			File Separation (page 6-81)
			Long Original (page 6-84)
	Delete (page 5-52)		
	Detail (page 5-51)		
	Memory Information (page 5-70)		
	Remove Memory (page 5-70)		
FAX Box (refer to FAX Operation Guide)			

Status / Job Cancel

or

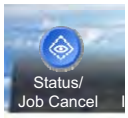

Printing Jobs (page 7-3)
Sending Jobs (page 7-5)
Storing Jobs (page 7-6)
Device/Communication (page 7-13)
Paper/Supplies (page 7-14)

System Menu / Counter

or

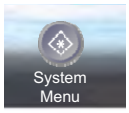

Quick Setup Wizard	FAX Setup (page 2-42)	
	Energy Saver Setup (page 2-42)	
	Network Setup (page 2-43)	
Counter (page 2-58)		
Cassette/MP Tray Settings	Cassette 1 (page 8-7)	
	Cassette 2 (page 8-7)	
	Cassette 3 (page 8-7)	
	Cassette 4 (page 8-7)	
	Cassette 5 (page 8-7)	
	MP Tray Setting (page 8-8)	
Common Settings	Language (page 8-10)	
	Default Screen (page 8-10)	
	Sound	Buzzer (page 8-10)
		FAX Speaker Volume (refer to **FAX Operation Guide**)
		FAX Monitor Volume (refer to **FAX Operation Guide**)
	Keyboard Layout (page 8-11)	
	Original/Paper Settings	Custom Original Size (page 8-11)
		Custom Paper Size (page 8-12)
		Media Type Setting (page 8-12)
		Default Paper Source (page 8-12)
		Auto Detect Original Size (page 8-13)
		Media for Auto (Color) (page 8-13)
		Media for Auto (B&W) (page 8-13)
		Paper Source for Cover (page 8-13)
		Special Paper Action (page 8-14)
		Separator Paper Source (page 8-14)
		Show Paper Setup Message (page 8-14)
	Measurement (page 8-15)	

Common Settings	**Error Handling**	Duplexing Error (page 8-16)
		Finishing Error (page 8-16)
		No Staple Error (page 8-16)
		Finished Pages Exceeded (page 8-16)
		Punch Waste Full Error (page 8-16)
		Paper Mismatch Error (page 8-16)
		Inserted Paper Mismatch (page 8-17)
		Paper Jam before Staple (page 8-17)
	Paper Output (page 8-17)	
	Orientation Confirmation (page 8-18)	
	Color Toner Empty Action (page 8-18)	
	Function Defaults	Orig. Orientation (Copy) (page 8-18)
		Orig. Orient.(Send/Store) (page 8-18)
		Original Image (Copy) (page 8-18)
		Org. Image (Send/Store) (page 8-18)
		FAX TX Resolution (refer to **FAX Operation Guide**)
		Scan Resolution (page 8-18)
		Color Selection (Copy) (page 8-18)
		Color Select.(Send/Store) (page 8-18)
		File Format (page 8-19)
		Backgrnd Density (Copy) (page 8-19)
		BackgrndDens.(Send/Store) (page 8-19)
		Prevent Bleed-thru (Copy) (page 8-19)
		Prevent Bleed(Send/Store) (page 8-19)
		Zoom (page 8-19)
		Border Erase Default (page 8-19)
		Border Erase to Back Page (page 8-19)
		Margin Default (page 8-19)
		Auto Image Rotation (Copy) (page 8-19)
		EcoPrint (page 8-19)
		Toner Save Level (EcoPrint) (page 8-19)
		High Comp. PDF Image (page 8-19)
		Color TIFF Compression (page 8-19)
		Image Quality (File Format) (page 8-20)

Common Settings	**Function Defaults**	Collate/Offset (page 8-20)
		JPEG/TIFF Print (page 8-20)
		XPS Fit to Page (page 8-20)
		PDF/A (page 8-20)
		File Name Entry (page 8-20)
		E-mail Subject/Body (page 8-20)
		i-FAX Subject/Body (page 8-20)
		DP Read Action (page 8-20)
		OCR Text Recognition (page 8-20)
		Primary OCR Language (page 8-21)
		Repeat Copy (page 8-21)
		Skip Blank Page (Copy) (page 8-21)
		Skip Blank Page (Send/Store) (page 8-21)
		File Separation (page 8-21)
		Continuous Scan (Copy) (page 8-21)
		Continuous Scan (Send/Store) (page 8-21)
		Continuous Scan (FAX) (refer to **FAX Operation Guide**)
		Trapping (page 8-21)
	Optional Keyboard Type (page 8-21)	
	System Stamp (page 8-22)	
	Manual Staple (page 8-28)	
	Offset Documents by Job (page 8-28)	
	Low Toner Alert Level (page 8-29)	
	Toner Waste Full Alert (page 8-29)	
	Offset One Page Documents (page 8-29)	
	Display Status/Log (page 8-29)	
	Message Banner Print (page 8-30)	
	Customize Status Display (page 8-30)	
	Message Board Settings (page 8-31)	
	Remote Printing (page 8-31)	
	Numeric Keypad Settings (page 8-32)	
	Prevent Light Reflection (page 8-32)	
	Function Key Assignment (page 8-32)	
	Show Power Off Message (page 8-32)	

Home	Customize Desktop (page 2-15)	
	Customize Taskbar (page 2-15)	
	Wallpaper (page 2-15)	
Copy	Paper Selection (page 8-33)	
	Auto Image Rotation Action (page 8-33)	
	Auto Paper Selection (page 8-33)	
	Auto % Priority (page 8-33)	
	Paper Size for Small Original (page 8-33)	
	Preset Limit (page 8-33)	
	Reserve Next Priority (page 8-33)	
	Quick Setup Registration (page 8-33)	
Send	Quick Setup Registration (page 8-34)	
	Dest. Check before Send (page 8-34)	
	Color Type (page 8-34)	
	Entry Check for New Dest. (page 8-34)	
	Default Screen (page 8-34)	
	Send and Forward (page 8-35)	
	New Destination Entry (page 8-35)	
	Recall Destination (page 8-35)	
	Broadcast (page 8-35)	
	OCR Text Recognition Act. (page 8-36)	
	HighCompressionPDF Mode (page 8-36)	
Document Box/Removable Memory	Custom Box (page 5-50)	
	FAX Box (refer to **FAX Operation Guide**)	
	Job Box	Quick Copy Job Retention (page 8-39)
		Repeat Copy Job Retention (page 8-39)
		Deletion of Job Retention (page 8-39)
	Polling Box (refer to **FAX Operation Guide**)	
	Quick Setup Registration (page 8-40)	
FAX (refer to FAX Operation Guide)		

Printer	Emulation (page 8-40)	
	Color Setting (page 8-41)	
	Gloss Mode (page 8-41)	
	EcoPrint (page 8-41)	
	Toner Save Level (EcoPrint) (page 8-41)	
	Override A4/Letter (page 8-41)	
	Duplex (page 8-41)	
	Copies (page 8-41)	
	Orientation (page 8-41)	
	Form Feed Timeout (page 8-41)	
	LF Action (page 8-41)	
	CR Action (page 8-41)	
	Job Name (page 8-42)	
	User Name (page 8-42)	
	Paper Feed Mode (page 8-42)	
	MP Tray Priority (page 8-42)	
	Auto Cassette Change (page 8-42)	
	Wide A4 (page 8-42)	
	Resolution (page 8-42)	
	KIR (page 8-42)	
Report	**Print Report**	Status Page (page 8-43)
		Font List (page 8-43)
		Network Status (page 8-43)
		Service Status (page 8-44)
		Optional Network Status (page 8-44)
	Admin Report Settings	Outgoing FAX Report (refer to **FAX Operation Guide**)
		Incoming FAX Report (refer to **FAX Operation Guide**)
	Result Report Settings	Send Result Report (page 8-44)
		FAX RX Result Report (refer to **FAX Operation Guide**
		Job Finish Notice Setting (refer to **FAX Operation Guide**)
		RX Result Report Type (refer to **FAX Operation Guide**)

Report	**Sending Log History**	Auto Sending (page 8-45)	
		Sending Log History (page 8-45)	
		Destination (page 8-45)	
		Job Log Subject (page 8-45)	
		SSFC Log Subject (page 8-45)	
		Personal Information (page 8-45)	
	Login History Settings	Login History (page 8-45)	
		Auto Sending (page 8-45)	
		Destination (page 8-45)	
		Subject (page 8-45)	
		Log Reset (page 8-45)	
	Device Log History Settings	Device Log History (page 8-46)	
		Auto Sending (page 8-46)	
		Destination (page 8-46)	
		Subject (page 8-46)	
	Secure Comm. Error Log	Secure Comm. Error Log (page 8-47)	
		Auto Sending (page 8-47)	
		Destination (page 8-47)	
		Subject (page 8-47)	
System/Network	**Network**	Host Name (page 8-48)	
		Wired Network Settings	TCP/IP Setting (page 8-49)
			LAN Interface (page 8-50)
		Wi-Fi Direct Settings	Wi-Fi Direct (page 8-51)
			Device Name (page 8-51)
			IP Address (page 8-51)
			Auto Disconnect (page 8-51)
		Wi-Fi Settings	Wi-Fi (page 8-51)
			Setup (page 8-52)
			TCP/IP Setting (page 8-53)
		Bonjour (page 8-55)	
		IPSec (page 8-55)	

System/Network	**Network**	**Protocol Settings**	SMTP (E-mail TX) (page 8-55
			POP3 (E-mail RX) (page 8-55)
			FTP Client (Transmission) (page 8-55)
			FTP Server (Reception) (page 8-55)
			SMB Client (Transmission) (page 8-55)
			NetBEUI (page 8-55)
			WSD Scan (page 8-56)
			WSD Print (page 8-56)
			i-FAX (page 8-56)
			DSM Scan (page 8-56)
			ThinPrint (page 8-56)
			LPD (page 8-56)
			Raw (page 8-57)
			IPP (page 8-57)
			IPP over SSL (page 8-57)
			HTTP (page 8-57)
			HTTPS (page 8-57)
			LDAP (page 8-57)
			SNMPv1/v2c (page 8-58)
			SNMPv3 (page 8-58)
			Enhanced WSD (page 8-58)
			Enhanced WSD over SSL (page 8-58)
			eSCL (page 8-58)
			eSCL over SSL (page 8-58)
		Security Settings (page 8-59)	
		Proxy (page 8-59)	
		Ping (page 8-59)	
		Restart Network (page 8-59)	

System/Network	**Optional Network**	Basic (page 8-60)
		Wireless Network (page 8-61)
	Primary Network (Client) (page 8-62)	
	Security Level (page 8-63)	
	Interface Block Setting	USB Host (page 8-63)
		USB Device (page 8-63)
		USB Storage (page 8-63)
		Optional Interface 1 (page 8-63)
		Optional Interface 2 (page 8-63)
	Data Security	Hard Disk/SSD Initialization (page 8-64)
		Data Sanitization (page 8-65)
		Software Verification (page 8-65)
	Optional Function (page 8-66)	
	Bluetooth Settings (page 8-66)	
	Restart Entire Device (page 8-66)	
	NFC (page 8-66)	
Edit Destination	Address Book (page 3-30)	
	One Touch Key (page 3-37)	
	Print List (refer to **FAX Operation Guide**)	
	Address Book Defaults	Sort (page 8-67)
		Narrow Down (page 8-67)
		Address Book Type (page 8-67)
	Edit Restriction	Address Book (page 8-67)
		One Touch Key (page 8-67)

User Login/Job Accounting	**User Login Setting**	User Login (page 9-3)	
		Authentication Security	User Account Lockout Set. (page 9-5)
			Password Policy Settings (page 9-7)
		Local User List (page 9-8)	
		Local Authorization (page 9-19)	
		Group Authorization Set.	Group Authorization (page 9-20)
			Group List (page 9-21)
		Guest Authorization Set.	Guest Authorization (page 9-23)
			Guest Property (page 9-24)
		Obtain NW User Property (page 9-26)	
		Simple Login Settings	Simple Login (page 9-28)
			Simple Login Key (page 9-29)
		ID Card Settings	Keyboard Login (page 9-31)
			Additional Authentication (page 9-32)
		PIN Code Authorization (page 9-31)	
	Job Accounting Setting	Job Accounting (page 9-35)	
		Job Accounting Access (page 9-36)	
		Job Accounting (Local)	Print Accounting Report (page 9-51)
			Total Job Accounting (page 9-50)
			Each Job Accounting (page 9-50)
			Accounting List (page 9-37)
			Default Setting (page 9-46)
		Apply Limit (page 9-53)	
		Copier/Printer Count (page 9-54)	
	Unknown User Setting (page 9-55)		
User Property (page 9-12)			

Date/Timer/Energy Saver	Date/Time (page 8-68)
	Date Format (page 8-68)
	Time Zone (page 8-68)
	Auto Panel Reset (page 8-68)
	Auto Error Clear (page 8-68)
	Low Power Timer (page 8-69)
	Panel Reset Timer (page 8-69)
	Sleep Timer (page 8-69)
	Interrupt Clear Timer (page 8-69)
	Error Job Skip (page 8-69)
	Error Clear Timer (page 8-69)
	Unusable Time (refer to **FAX Operation Guide**)
	Sleep Rules (models for Europe) (page 8-70)
	Sleep Level (models except for Europe) (page 8-70)
	EnergySaver RecoveryLevel (page 8-70)
	Weekly Timer Settings (page 8-71)
	Power Off Rule (models for Europe) (page 8-71)
	Power Off Timer (models for Europe) (page 8-71)
	Ping Timeout (page 8-71)

Adjustment/Maintenance	**Density Adjustment**	Copy (page 8-72)
		Send/Box (page 8-72)
		FAX (refer to **FAX Operation Guide**)
	Background Density Adj.	Copy (Auto) (page 8-72)
		Send/Box (Auto) (page 8-72)
	Sharpness Adjustment	Copy (page 8-72)
		Send/Box (page 8-72)
	Drum Heater*1 (page 8-72)	
	Drum Refresh (page 8-72)	
	Correcting Black Lines (page 8-73)	
	System Initialization (page 8-73)	
	Display Brightness (page 8-73)	
	Silent Mode (page 8-73)	
	Memory Diagnostics (page 8-73)	
	Auto Color Correction (page 8-73)	
	Color Registration (page 8-73)	
	Calibration Cycle (page 8-73)	
	Tone Curve Adjustment (page 8-73)	
	Calibration (page 8-74)	
	Developer Refresh (page 8-74)	
	Laser Scanner Cleaning (page 8-74)	
	Contrast	Copy (page 8-74)
		Send/Box (page 8-74)
	Auto Drum Refresh (page 8-74)	
	Open Toner Cover (page 8-74)	
Internet (page 8-75)		
Application (page 8-75)		

*1 This setting does not appear in some regions.

1 Legal and Safety Information

Please read this information before using your machine. This chapter provides information on the following topics.

Notice 1-2
Safety Conventions in This Guide 1-2
Environment 1-3
Precautions for Use 1-4
Laser Safety (Europe) 1-5
SAFETY OF LASER BEAM (USA) 1-6
Safety Instructions Regarding the Disconnection of Power 1-7
Compliance and Conformity 1-7
Radio Tag Technology 1-7
Other precautions (for users in California, the United States) 1-7
Warranty (the United States and Canada) 1-8
Legal Restriction on Copying/Scanning 1-10
EN ISO 7779 1-10
EK1-ITB 2000 1-10
Wireless Connection (Mexico only) 1-10
Security Precautions when Using Wireless LAN (If equipped) 1-10
Limited Use of This Product (If equipped) 1-11
Legal Information 1-12
Energy Saving Control Function 1-18
Automatic 2-Sided Print Function 1-18
Resource Saving - Paper 1-18
Environmental benefits of "Power Management" 1-18
Energy Star (ENERGY STAR®) Program 1-18

Notice

Safety Conventions in This Guide

The sections of this guide and parts of the machine marked with symbols are safety warnings meant to protect the user, other individuals and surrounding objects, and ensure correct and safe usage of the machine. The symbols and their meanings are indicated below.

WARNING: Indicates that serious injury or even death may result from insufficient attention to or incorrect compliance with the related points.

CAUTION: Indicates that personal injury or mechanical damage may result from insufficient attention to or incorrect compliance with the related points.

Symbols

The △ symbol indicates that the related section includes safety warnings. Specific points of attention are indicated inside the symbol.

... [General warning]

... [Warning of high temperature]

The ⃠ symbol indicates that the related section includes information on prohibited actions. Specifics of the prohibited action are indicated inside the symbol.

... [Warning of prohibited action]

... [Disassembly prohibited]

The ● symbol indicates that the related section includes information on actions which must be performed. Specifics of the required action are indicated inside the symbol.

... [Alert of required action]

... [Remove the power plug from the outlet]

... [Always connect the machine to an outlet with a ground connection]

Please contact your service representative to order a replacement if the safety warnings in this Operation Guide are illegible or if the guide itself is missing (fee required).

NOTE
An original which resembles a bank note closely may not be copied properly in some rare cases because this machine is equipped with a counterfeiting prevention function.

Environment

The service environmental conditions are as follows:

Temperature	50 to 90.5 °F (10 to 32.5 °C) (But humidity should be 70% or less when temperature is 90.5 °F (32.5 °C).)
Humidity	10 to 80% (But temperature should be 86 °F (30 °C) or less when humidity is 80%.)

Avoid the following locations when selecting a site for the machine.

- Avoid locations near a window or with exposure to direct sunlight.
- Avoid locations with vibrations.
- Avoid locations with drastic temperature fluctuations.
- Avoid locations with direct exposure to hot or cold air.
- Avoid poorly ventilated locations.

If the floor is delicate against casters, when this machine is moved after installation, the floor material may be damaged.

During copying, some ozone is released, but the amount does not cause any ill effect to one's health. If, however, the machine is used over a long period of time in a poorly ventilated room or when making an extremely large number of copies, the smell may become unpleasant. To maintain the appropriate environment for copy work, it is suggested that the room be properly ventilated.

Precautions for Use

Cautions when handling consumables

CAUTION

Do not attempt to incinerate parts which contain toner. Dangerous sparks may cause burns.

Keep parts which contain toner out of the reach of children.

If toner happens to spill from parts which contain toner, avoid inhalation and ingestion, as well as contact with your eyes and skin.

- If you do happen to inhale toner, move to a place with fresh air and gargle thoroughly with a large amount of water. If coughing develops, contact a physician.
- If you do happen to ingest toner, rinse your mouth with water and drink 1 or 2 cups of water to dilute the contents of your stomach. If necessary, contact a physician.
- If you do happen to get toner in your eyes, flush them thoroughly with water. If there is any remaining tenderness, contact a physician.
- If toner does happen to get on your skin, wash with soap and water.

Do not attempt to force open or destroy parts which contain toner.

Other precautions

Return the exhausted toner container and waste toner box to your dealer or service representative. The collected toner container and waste toner box will be recycled or disposed in accordance with the relevant regulations.

Store the machine while avoiding exposure to direct sunlight.

Store the machine in a place where the temperature stays below 40 °C while avoiding sharp changes of temperature and humidity.

If the machine will not be used for an extended period of time, remove the paper from the cassette and the Multi Purpose (MP) Tray, return it to its original package and reseal it.

Laser Safety (Europe)

Laser radiation could be hazardous to the human body. For this reason, laser radiation emitted inside this machine is hermetically sealed within the protective housing and external cover. In the normal operation of the product by user, no radiation can leak from the machine.

This machine is classified as Class 1 laser product under IEC/EN 60825-1:2007.

Caution: Performance of procedures other than those specified in this manual may result in hazardous radiation exposure.

These labels are attached to the laser scanner unit inside the machine and are not in a user access area.



Regarding CLASS 1 laser products, information is provided on the rating label.

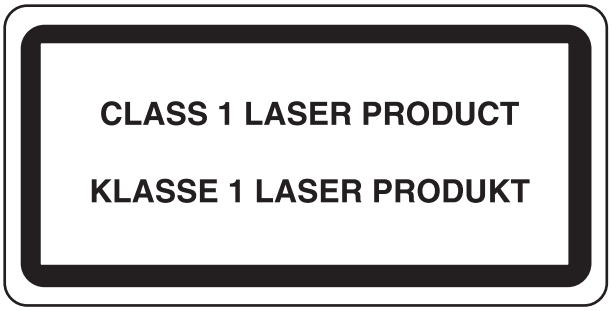

SAFETY OF LASER BEAM (USA)

1. Safety of laser beam

This machine has been certified by the manufacturer to Class 1 level under the radiation performance standards established by the U.S.DHHS (Department of Health and Human Services) in 1968. This indicates that the product is safe to use during normal operation and maintenance. The laser optical system, enclosed in a protective housing and sealed within the external covers, never permits the laser beam to escape.

2. The CDRH Act

A laser-product-related act was implemented on Aug. 2, 1976, by the Center for Devices and Radiological Health (CDRH) of the U.S. Food and Drug Administration (FDA). This act prohibits the sale of laser products in the U.S. without certification, and applies to laser products manufactured after Aug. 1, 1976. The label shown below indicates compliance with the CDRH regulations and must be attached to laser products marketed in the United States.

The position of the rating label is show below.

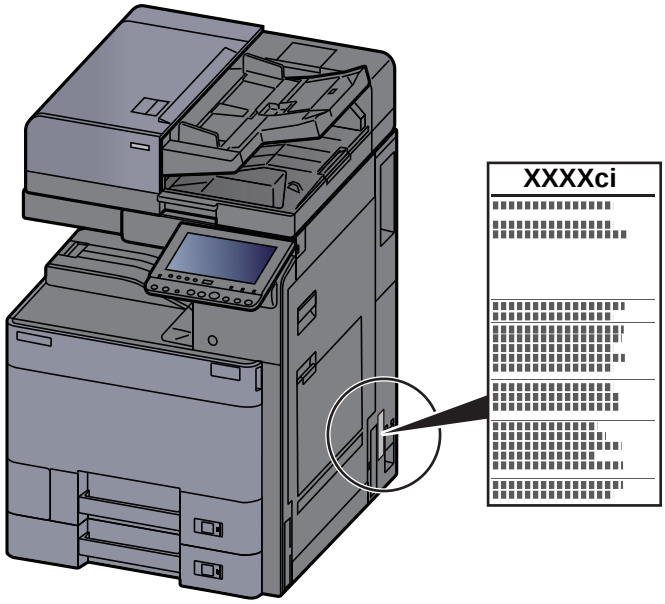

3. Optical unit

When checking the optical unit, avoid direct exposure to the laser beam, which is invisible. Shown at below is the label located on the cover of the optical unit.



4. Maintenance

For safety of the service personnel, follow the maintenance instructions in the other section of this manual.

5. Safety switch

The power to the laser unit is cut off when the front cover is opened.

Safety Instructions Regarding the Disconnection of Power

Caution: The power plug is the main isolation device! Other switches on the equipment are only functional switches and are not suitable for isolating the equipment from the power source.

Attention: Le débranchement de la fiche secteur est le seul moyen de mettre l'appareil hors tension. Les interrupteurs sur l'appareil ne sont que des interrupteurs de fonctionnement: ils ne mettent pas l'appareil hors tension.

Compliance and Conformity

This equipment has been tested and found to comply with the limits for a Class B digital device, pursuant to Part 15 and Part 18 of the FCC Rules.

These limits are designed to provide reasonable protection against harmful interference in a residential installation. This equipment generates, uses and can radiate radio frequency energy and, if not installed and used in accordance with the instructions, may cause harmful interference to radio communications. However, there is no guarantee that interference will not occur in a particular installation. If this equipment does cause harmful interference to radio or television reception, which can be determined by turning the equipment off and on, the user is encouraged to try to correct the interference by one or more of the following measures:

- Reorient or relocate the receiving antenna.
- Increase the separation between the equipment and receiver.
- Connect the equipment into an outlet on a circuit different from that to which the receiver is connected.
- Consult the dealer or an experienced radio/TV technician for help.
- The use of a non-shielded interface cable with the referenced device is prohibited.

CAUTION — The changes or modifications not expressly approved by the party responsible for compliance could void the user's authority to operate the equipment.

This device complies with Part 15 of FCC Rules.

Operation is subject to the following two conditions; (1) this device may not cause harmful interference, and (2) this device must accept any interference received, including interference that may cause undesired operation.

This device complies with Industry Canada licence-exempt RSS standard(s). Operation is subject to the following two conditions: (1) this device may not cause interference, and (2) this device must accept any interference, including interference that may cause undesired operation of the device.

The antenna(s) used for this transmitter must be installed to provide a separation distance of at least 20 cm from all persons and must not be co-located or operating in conjunction with any other transmitter.

Industry Canada ICES-003 Compliance Label: CAN ICES-3B/NMB-3B

* The above statements are valid only in the United States of America and Canada.

NOTE — Use shielded interface cables.

Radio Tag Technology

In some countries the radio tag technology used in this equipment to identify the toner container may be subject to authorization and the use of this equipment may consequently be restricted.

Other precautions (for users in California, the United States)

Perchlorate Material - special handling may apply. See *www.dtsc.ca.gov/hazardouswaste/perchlorate*.

Warranty (the United States and Canada)

2552ci/3252ci

COLOR MULTIFUNCTIONAL PRODUCT LIMITED WARRANTY

KYOCERA Document Solutions America, Inc. and KYOCERA Document Solutions Canada, Ltd. (both referred to as "KYOCERA") warrant the Customer's new Color Multifunctional Product (referred to as "MFP"), and the new accessories installed with the initial installation of the MFP, against any defects in material and workmanship for a period of one year, or 200,000 copies/prints from date of installation, whichever first occurs. In the event the MFP or an accessory is found to be defective within the warranty period, KYOCERA's only obligation and the Customer's exclusive remedy shall be replacement of any defective parts. KYOCERA shall have no obligation to furnish labor.

This warranty covers Maintenance Kits and the components of Maintenance Kits included with the original MFP for a period of one year or 200,000 copies/prints, whichever first occurs. Maintenance Kits consist of the developing unit, the drum unit, the transfer belt, and the fixing unit. Replacement Maintenance Kits have a 90 day Limited Warranty.

This warranty is valid only for the original retail purchaser (referred to as the "Customer") of a new KYOCERA MFP in the United States of America or Canada, based upon the country of purchase.

In order to obtain performance of this warranty, the Customer must immediately notify the Authorized KYOCERA Dealer from whom the product was purchased. If the KYOCERA Dealer is not able to provide service, write to KYOCERA at the address below for the name and address of the Authorized KYOCERA Dealer in your area, or check KYOCERA's website at www.kyoceradocumentsolutions.com for KYOCERA Document Solutions America, Inc. or www.kyoceradocumentsolutions.ca for KYOCERA Document Solutions Canada, Ltd.

This warranty does not cover MFPs or accessories which: (a) have become damaged due to operator negligence, misuse, accidents, improper storage or unusual physical or electrical stress,

(b) have used parts or supplies which are not genuine KYOCERA brand parts or supplies, (c) have been installed or serviced by a technician not employed by KYOCERA or an Authorized KYOCERA Dealer, or (d) have had the serial number modified, altered, or removed.

This warranty gives the Customer specific legal rights. The Customer may also have other rights, which vary from state to state, or province to province. Neither the seller, nor any other person, is authorized to extend the time period or expand this warranty on behalf of KYOCERA.

THIS WARRANTY IS MADE IN LIEU OF ALL OTHER WARRANTIES AND CONDITIONS, EXPRESS OR IMPLIED, AND KYOCERA SPECIFICALLY DISCLAIMS ANY IMPLIED WARRANTY OR CONDITION OF MERCHANTABILITY OR FITNESS FOR A PARTICULAR PURPOSE. THIS WARRANTY SHALL NOT EXTEND TO, AND KYOCERA SHALL NOT BE LIABLE FOR, ANY INCIDENTAL OR CONSEQUENTIAL DAMAGES WHICH MAY ARISE OUT OF THE USE OF, OR INABILITY TO USE, THE MFP.

KYOCERA Document Solutions America, Inc.

225 Sand Road,
Fairfield, New Jersey 07004-0008, USA

KYOCERA Document Solutions Canada, Ltd.

6120 Kestrel Rd., Mississauga, ON L5T 1S8,
Canada

3552ci/4052ci/5052ci/6052ci
COLOR MULTIFUNCTIONAL PRODUCT LIMITED WARRANTY

KYOCERA Document Solutions America, Inc. and KYOCERA Document Solutions Canada, Ltd. (both referred to as "KYOCERA") warrant the Customer's new Color Multifunctional Product (referred to as "MFP"), and the new accessories installed with the initial installation of the MFP, against any defects in material and workmanship for a period of one year, or 600,000 copies/prints from date of installation, whichever first occurs. In the event the MFP or an accessory is found to be defective within the warranty period, KYOCERA's only obligation and the Customer's exclusive remedy shall be replacement of any defective parts. KYOCERA shall have no obligation to furnish labor.

This warranty covers Maintenance Kits and the components of Maintenance Kits included with the original MFP for a period of one year or 600,000 copies/prints, whichever first occurs. Maintenance Kits consist of the developing unit, the drum unit, the transfer belt, and the fixing unit. Replacement Maintenance Kits have a 90 day Limited Warranty.

This warranty is valid only for the original retail purchaser (referred to as the "Customer") of a new KYOCERA MFP in the United States of America or Canada, based upon the country of purchase.

In order to obtain performance of this warranty, the Customer must immediately notify the Authorized KYOCERA Dealer from whom the product was purchased. If the KYOCERA Dealer is not able to provide service, write to KYOCERA at the address below for the name and address of the Authorized KYOCERA Dealer in your area, or check KYOCERA's website at www.kyoceradocumentsolutions.com for KYOCERA Document Solutions America, Inc. or www.kyoceradocumentsolutions.ca for KYOCERA Document Solutions Canada, Ltd.

This warranty does not cover MFPs or accessories which: (a) have become damaged due to operator negligence, misuse, accidents, improper storage or unusual physical or electrical stress,

(b) have used parts or supplies which are not genuine KYOCERA brand parts or supplies, (c) have been installed or serviced by a technician not employed by KYOCERA or an Authorized KYOCERA Dealer, or (d) have had the serial number modified, altered, or removed.

This warranty gives the Customer specific legal rights. The Customer may also have other rights, which vary from state to state, or province to province. Neither the seller, nor any other person, is authorized to extend the time period or expand this warranty on behalf of KYOCERA.

THIS WARRANTY IS MADE IN LIEU OF ALL OTHER WARRANTIES AND CONDITIONS, EXPRESS OR IMPLIED, AND KYOCERA SPECIFICALLY DISCLAIMS ANY IMPLIED WARRANTY OR CONDITION OF MERCHANTABILITY OR FITNESS FOR A PARTICULAR PURPOSE. THIS WARRANTY SHALL NOT EXTEND TO, AND KYOCERA SHALL NOT BE LIABLE FOR, ANY INCIDENTAL OR CONSEQUENTIAL DAMAGES WHICH MAY ARISE OUT OF THE USE OF, OR INABILITY TO USE, THE MFP.

KYOCERA Document Solutions America, Inc.
225 Sand Road,
Fairfield, New Jersey 07004-0008, USA

KYOCERA Document Solutions Canada, Ltd.
6120 Kestrel Rd., Mississauga, ON L5T 1S8,
Canada

Legal Restriction on Copying/Scanning

It may be prohibited to copy/scan copyrighted material without permission of the copyright owner.

Copying/Scanning the following items is prohibited and may be penalized by low. It may not be limited to these items. Do not knowingly copy/scan the items that are not to be copied/scanned.

- Paper money
- Bank note
- Securities
- Stamp
- Passport
- Certificate

Local laws and regulations may prohibit or restrict copying/scanning of other items not mentioned above.

EN ISO 7779

Maschinenlärminformations-Verordnung 3. GPSGV, 06.01.2004: Der höchste Schalldruckpegel beträgt 70 dB (A) oder weniger gemäß EN ISO 7779.

EK1-ITB 2000

Das Gerät ist nicht für die Benutzung im unmittelbaren Gesichtsfeld am Bildschirmarbeitsplatz vorgesehen. Um störende Reflexionen am Bildschirmarbeitsplatz zu vermeiden, darf dieses Produkt nicht im unmittelbaren Gesichtsfeld platziert werden.

Wireless Connection (Mexico only)

The operation of this equipment is subject to the following two conditions:

(1) it is possible that this equipment or device may not cause harmful interference, and (2) this equipment or device must accept any interference, including interference that may cause undesired operation.

La operación de este equipo está sujeta a las siguientes dos condiciones:

(1) es posible que este equipo o dispositivo no cause interferencia perjudicial y (2) este equipo o dispositivo debe aceptar cualquier interferencia, incluyendo la que pueda causar su operación no deseada.

Security Precautions when Using Wireless LAN (If equipped)

Wireless LAN allows information to be exchanged between wireless access points instead of using a network cable, which offers the advantage that a WLAN connection can be established freely within an area in which radio waves can be transmitted.

On the other hand, the following problems may occur if security settings are not configured, because radio waves can pass through obstacles (including walls) and reach everywhere within a certain area.

Secretly Viewing Communication Contents

A third person with malicious objectives may intentionally monitor radio waves and gain unauthorized access to the following communication contents.

- Personal information including ID, passwords, and credit card numbers
- Contents of email messages

Illegal Intrusion

A third party with malicious intent may gain unauthorized access to personal or company networks and conduct the following illegal actions.

- Extracting personal and confidential information (information leak)
- Entering into communication while impersonating a specific person and distributing unauthorized information (spoofing)
- Modifying and retransmitting intercepted communications (falsification)
- Transmitting computer viruses and destroying data and systems (destruction)

Wireless LAN cards and wireless access points contain built-in security mechanisms to address these problems and to reduce the possibility of these problems occurring by configuring the security settings of wireless LAN products when the product is used.

We recommend that customers take responsibility and use their judgment when configuring the security settings and that they ensure that they fully understand the problems that can occur when the product is used without configuring the security settings.

Limited Use of This Product (If equipped)

- Radio waves transmitted from this product may affect medical equipment. When using this product in a medical institution or in the vicinity of medical instruments, either use this product according to the instructions and precautions provided by the administrator of the institution or those provided on the medical instruments.
- Radio waves transmitted from this product may affect automatic control equipment including automatic doors and fire alarms. When using this product in the vicinity of the automatic control equipment, use this product according to the instructions and precautions provided on the automatic control equipment.
- If this product is used in devices that are directly related to service including airplanes, trains, ships, and automobiles or this product is used in applications requiring high reliability and safety to function and in devices requiring accuracy including those used in disaster prevention and crime prevention and those used for various safety purposes, please use this product after considering the safety design of the entire system including adoption of a failsafe design and redundancy design for reliability and safety maintenance of the entire system. This product is not intended for use in applications requiring high reliability and safety including aerospace instruments, trunk communication equipment, nuclear power control equipment, and medical equipment; hence, the decision as to whether to use this product in these applications needs to be fully considered and determined.

Legal Information

Copying or other reproduction of all or part of this guide without the prior written consent of KYOCERA Document Solutions Inc. is prohibited.

Regarding Trade Names

- PRESCRIBE is registered trademark of Kyocera Corporation.
- KPDL is a trademark of Kyocera Corporation.
- Microsoft, Windows, Windows XP, Windows Server 2003, Windows Vista, Windows Server 2008, Windows 7, Windows Server 2012, Windows 8, Windows 8.1, Windows 10 and Internet Explorer are registered trademarks or trademarks of Microsoft Corporation in the U.S.A. and/or other countries.
- PCL is a trademark of Hewlett-Packard Company.
- Adobe Acrobat, Adobe Reader and PostScript are trademarks of Adobe Systems Incorporated.
- Ethernet is a registered trademark of Xerox Corporation.
- IBM and IBM PC/AT are trademarks of International Business Machines Corporation.
- AppleTalk, Bonjour, Macintosh, and Mac OS are trademarks of Apple Inc., registered in the U.S. and other countries.
- All European language fonts installed in this machine are used under licensing agreement with Monotype Imaging Inc.
- Helvetica, Palatino and Times are registered trademarks of Linotype GmbH.
- ITC Avant Garde Gothic, ITC Bookman, ITC ZapfChancery and ITC ZapfDingbats are registered trademarks of International Typeface Corporation.
- ThinPrint is a trademark of Cortado AG in Germany and other countries.
- UFST™ MicroType® fonts by Monotype Imaging Inc. are installed in this machine.
- This machine contains the software having modules developed by Independent JPEG Group.
- This product contains NetFront Browser of ACCESS CO., LTD.
- ACCESS, ACCESS logo and NetFront are trademarks or registered trademarks of ACCESS CO., LTD. in the United States, Japan and other countries.
- © 2011 ACCESS CO., LTD. All rights reserved.



- iPad, iPhone and iPod touch are trademarks of Apple Inc., registered in the U.S. and other countries.
- AirPrint and the AirPrint logo are trademarks of Apple Inc.
- iOS is a trademark or registered trademark of Cisco in the U.S. and other countries and is used under licens Apple Inc.
- Google and Google Cloud Print™ are trademarks and/or registered trademarks of Google Inc.
- Mopria™ is registered trademarks of Mopria™ Alliance.
- Wi-Fi and Wi-Fi Direct are trademarks and/or registered trademarks of Wi-Fi Alliance.

All other brands and product names are registered trademarks or trademarks of their respective companies. The designations ™ and ® will not be used in this Operation Guide.

GPL/LGPL

This product contains GPL (http://www.gnu.org/licenses/gpl.html) and/or LGPL (http://www.gnu.org/licenses/lgpl.html) software as part of its firmware. You can get the source code, and you are permitted to copy, redistribute and modify it under the terms of GPL/LGPL. For further information including availability of the source code, visit http://www.kyoceradocumentsolutions.com/gpl/.

OpenSSL License

Copyright (c) 1998-2006 The OpenSSL Project. All rights reserved.

Redistribution and use in source and binary forms, with or without modification, are permitted provided that the following conditions are met:

1. Redistributions of source code must retain the above copyright notice, this list of conditions and the following disclaimer.
2. Redistributions in binary form must reproduce the above copyright notice, this list of conditions and the following disclaimer in the documentation and/or other materials provided with the distribution.
3. All advertising materials mentioning features or use of this software must display the following acknowledgment: "This product includes software developed by the OpenSSL Project for use in the OpenSSL Toolkit. (http://www.openssl.org/)"
4. The names "OpenSSL Toolkit" and "OpenSSL Project" must not be used to endorse or promote products derived from this software without prior written permission.
   For written permission, please contact openssl-core@openssl.org.
5. Products derived from this software may not be called "OpenSSL" nor may "OpenSSL" appear in their names without prior written permission of the OpenSSL Project.
6. Redistributions of any form whatsoever must retain the following acknowledgment: "This product includes software developed by the OpenSSL Project for use in the OpenSSL Toolkit (http://www.openssl.org/)"

THIS SOFTWARE IS PROVIDED BY THE OpenSSL PROJECT "AS IS" AND ANY EXPRESSED OR IMPLIED WARRANTIES, INCLUDING, BUT NOT LIMITED TO, THE IMPLIED WARRANTIES OF MERCHANTABILITY AND FITNESS FOR A PARTICULAR PURPOSE ARE DISCLAIMED. IN NO EVENT SHALL THE OpenSSL PROJECT OR ITS CONTRIBUTORS BE LIABLE FOR ANY DIRECT, INDIRECT, INCIDENTAL, SPECIAL, EXEMPLARY, OR CONSEQUENTIAL DAMAGES (INCLUDING, BUT NOT LIMITED TO, PROCUREMENT OF SUBSTITUTE GOODS OR SERVICES; LOSS OF USE, DATA, OR PROFITS; OR BUSINESS INTERRUPTION) HOWEVER CAUSED AND ON ANY THEORY OF LIABILITY, WHETHER IN CONTRACT, STRICT LIABILITY, OR TORT (INCLUDING NEGLIGENCE OR OTHERWISE) ARISING IN ANY WAY OUT OF THE USE OF THIS SOFTWARE, EVEN IF ADVISED OF THE POSSIBILITY OF SUCH DAMAGE.

Original SSLeay License

Copyright (C) 1995-1998 Eric Young (eay@cryptsoft.com) All rights reserved.

This package is an SSL implementation written by Eric Young (eay@cryptsoft.com). The implementation was written so as to conform with Netscapes SSL.

This library is free for commercial and non-commercial use as long as the following conditions are adhered to. The following conditions apply to all code found in this distribution, be it the RC4, RSA, lhash, DES, etc., code; not just the SSL code. The SSL documentation included with this distribution is covered by the same copyright terms except that the holder is Tim Hudson (tjh@cryptsoft.com).

Copyright remains Eric Young's, and as such any Copyright notices in the code are not to be removed.

If this package is used in a product, Eric Young should be given attribution as the author of the parts of the library used.

This can be in the form of a textual message at program startup or in documentation (online or textual) provided with the package.

Redistribution and use in source and binary forms, with or without modification, are permitted provided that the following conditions are met:

1. Redistributions of source code must retain the copyright notice, this list of conditions and the following disclaimer.
2. Redistributions in binary form must reproduce the above copyright notice, this list of conditions and the following disclaimer in the documentation and/or other materials provided with the distribution.
3. All advertising materials mentioning features or use of this software must display the following acknowledgement:
   "This product includes cryptographic software written by Eric Young (eay@cryptsoft.com)"
   The word 'cryptographic' can be left out if the routines from the library being used are not cryptographic related :-).
4. If you include any Windows specific code (or a derivative thereof) from the apps directory (application code) you must include an acknowledgement: "This product includes software written by Tim Hudson (tjh@cryptsoft.com)"

THIS SOFTWARE IS PROVIDED BY ERIC YOUNG "AS IS" AND ANY EXPRESS OR IMPLIED WARRANTIES, INCLUDING, BUT NOT LIMITED TO, THE IMPLIED WARRANTIES OF MERCHANTABILITY AND FITNESS FOR A PARTICULAR PURPOSE ARE DISCLAIMED. IN NO EVENT SHALL THE AUTHOR OR CONTRIBUTORS BE LIABLE FOR ANY DIRECT, INDIRECT, INCIDENTAL, SPECIAL, EXEMPLARY, OR CONSEQUENTIAL DAMAGES (INCLUDING, BUT NOT LIMITED TO, PROCUREMENT OF SUBSTITUTE GOODS OR SERVICES; LOSS OF USE, DATA, OR PROFITS; OR BUSINESS INTERRUPTION) HOWEVER CAUSED AND ON ANY THEORY OF LIABILITY, WHETHER IN CONTRACT, STRICT LIABILITY, OR TORT (INCLUDING NEGLIGENCE OR OTHERWISE) ARISING IN ANY WAY OUT OF THE USE OF THIS SOFTWARE, EVEN IF ADVISED OF THE POSSIBILITY OF SUCH DAMAGE.

The licence and distribution terms for any publically available version or derivative of this code cannot be changed. i.e. this code cannot simply be copied and put under another distribution licence [including the GNU Public Licence.]

Monotype Imaging License Agreement

1 *Software* shall mean the digitally encoded, machine readable, scalable outline data as encoded in a special format as well as the UFST Software.

2 You agree to accept a non-exclusive license to use the Software to reproduce and display weights, styles and versions of letters, numerals, characters and symbols (*Typefaces*) solely for your own customary business or personal purposes at the address stated on the registration card you return to Monotype Imaging. Under the terms of this License Agreement, you have the right to use the Fonts on up to three printers. If you need to have access to the fonts on more than three printers, you need to acquire a multiuser license agreement which can be obtained from Monotype Imaging. Monotype Imaging retains all rights, title and interest to the Software and Typefaces and no rights are granted to you other than a License to use the Software on the terms expressly set forth in this Agreement.

3 To protect proprietary rights of Monotype Imaging, you agree to maintain the Software and other proprietary information concerning the Typefaces in strict confidence and to establish reasonable procedures regulating access to and use of the Software and Typefaces.

4 You agree not to duplicate or copy the Software or Typefaces, except that you may make one backup copy. You agree that any such copy shall contain the same proprietary notices as those appearing on the original.

5 This License shall continue until the last use of the Software and Typefaces, unless sooner terminated. This License may be terminated by Monotype Imaging if you fail to comply with the terms of this License and such failure is not remedied within thirty (30) days after notice from Monotype Imaging. When this License expires or is terminated, you shall either return to Monotype Imaging or destroy all copies of the Software and Typefaces and documentation as requested.

6 You agree that you will not modify, alter, disassemble, decrypt, reverse engineer or decompile the Software.

7 Monotype Imaging warrants that for ninety (90) days after delivery, the Software will perform in accordance with Monotype Imaging-published specifications, and the diskette will be free from defects in material and workmanship. Monotype Imaging does not warrant that the Software is free from all bugs, errors and omissions.

The parties agree that all other warranties, expressed or implied, including warranties of fitness for a particular purpose and merchantability, are excluded.

8 Your exclusive remedy and the sole liability of Monotype Imaging in connection with the Software and Typefaces is repair or replacement of defective parts, upon their return to Monotype Imaging.

In no event will Monotype Imaging be liable for lost profits, lost data, or any other incidental or consequential damages, or any damages caused by abuse or misapplication of the Software and Typefaces.

9 Massachusetts U.S.A. law governs this Agreement.

10 You shall not sublicense, sell, lease, or otherwise transfer the Software and/or Typefaces without the prior written consent of Monotype Imaging.

11 Use, duplication or disclosure by the Government is subject to restrictions as set forth in the Rights in Technical Data and Computer Software clause at FAR 252-227-7013, subdivision (b)(3)(ii) or subparagraph (c)(1)(ii), as appropriate. Further use, duplication or disclosure is subject to restrictions applicable to restricted rights software as set forth in FAR 52.227-19 (c)(2).

12 You acknowledge that you have read this Agreement, understand it, and agree to be bound by its terms and conditions. Neither party shall be bound by any statement or representation not contained in this Agreement. No change in this Agreement is effective unless written and signed by properly authorized representatives of each party. By opening this diskette package, you agree to accept the terms and conditions of this Agreement.

Knopflerfish License

This product includes software developed by the Knopflerfish Project.
http://www.knopflerfish.org

Copyright 2003-2010 The Knopflerfish Project. All rights reserved.

Redistribution and use in source and binary forms, with or without modification, are permitted provided that the following conditions are met:

- Redistributions of source code must retain the above copyright notice, this list of conditions and the following disclaimer.
- Redistributions in binary form must reproduce the above copyright notice, this list of conditions and the following disclaimer in the documentation and/or other materials provided with the distribution.
- Neither the name of the KNOPFLERFISH project nor the names of its contributors may be used to endorse or promote products derived from this software without specific prior written permission.

THIS SOFTWARE IS PROVIDED BY THE COPYRIGHT HOLDERS AND CONTRIBUTORS "AS IS" AND ANY EXPRESS OR IMPLIED WARRANTIES, INCLUDING, BUT NOT LIMITED TO, THE IMPLIED WARRANTIES OF MERCHANTABILITY AND FITNESS FOR A PARTICULAR PURPOSE ARE DISCLAIMED. IN NO EVENT SHALL THE COPYRIGHT OWNER OR CONTRIBUTORS BE LIABLE FOR ANY DIRECT, INDIRECT, INCIDENTAL, SPECIAL, EXEMPLARY, OR CONSEQUENTIAL DAMAGES (INCLUDING, BUT NOT LIMITED TO, PROCUREMENT OF SUBSTITUTE GOODS OR SERVICES; LOSS OF USE, DATA, OR PROFITS; OR BUSINESS INTERRUPTION) HOWEVER CAUSED AND ON ANY THEORY OF LIABILITY, WHETHER IN CONTRACT, STRICT LIABILITY, OR TORT (INCLUDING NEGLIGENCE OR OTHERWISE) ARISING IN ANY WAY OUT OF THE USE OF THIS SOFTWARE, EVEN IF ADVISED OF THE POSSIBILITY OF SUCH DAMAGE.

Apache License (Version 2.0)

Apache License
Version 2.0, January 2004
http://www.apache.org/licenses/

TERMS AND CONDITIONS FOR USE, REPRODUCTION, AND DISTRIBUTION

1. Definitions.

   "License" shall mean the terms and conditions for use, reproduction, and distribution as defined by Sections 1 through 9 of this document.

   "Licensor" shall mean the copyright owner or entity authorized by the copyright owner that is granting the License.

   "Legal Entity" shall mean the union of the acting entity and all other entities that control, are controlled by, or are under common control with that entity. For the purposes of this definition, "control" means (i) the power, direct or indirect, to cause the direction or management of such entity, whether by contract or otherwise, or (ii) ownership of fifty percent (50%) or more of the outstanding shares, or (iii) beneficial ownership of such entity.

   "You" (or "Your") shall mean an individual or Legal Entity exercising permissions granted by this License.

   "Source" form shall mean the preferred form for making modifications, including but not limited to software source code, documentation source, and configuration files.

"Object" form shall mean any form resulting from mechanical transformation or translation of a Source form, including but not limited to compiled object code, generated documentation, and conversions to other media types.

"Work" shall mean the work of authorship, whether in Source or Object form, made available under the License, as indicated by a copyright notice that is included in or attached to the work (an example is provided in the Appendix below).

"Derivative Works" shall mean any work, whether in Source or Object form, that is based on (or derived from) the Work and for which the editorial revisions, annotations, elaborations, or other modifications represent, as a whole, an original work of authorship. For the purposes of this License, Derivative Works shall not include works that remain separable from, or merely link (or bind by name) to the interfaces of, the Work and Derivative Works thereof.

"Contribution" shall mean any work of authorship, including the original version of the Work and any modifications or additions to that Work or Derivative Works thereof, that is intentionally submitted to Licensor for inclusion in the Work by the copyright owner or by an individual or Legal Entity authorized to submit on behalf of the copyright owner. For the purposes of this definition, "submitted" means any form of electronic, verbal, or written communication sent to the Licensor or its representatives, including but not limited to communication on electronic mailing lists, source code control systems, and issue tracking systems that are managed by, or on behalf of, the Licensor for the purpose of discussing and improving the Work, but excluding communication that is conspicuously marked or otherwise designated in writing by the copyright owner as "Not a Contribution."

"Contributor" shall mean Licensor and any individual or Legal Entity on behalf of whom a Contribution has been received by Licensor and subsequently incorporated within the Work.

2. Grant of Copyright License. Subject to the terms and conditions of this License, each Contributor hereby grants to You a perpetual, worldwide, non-exclusive, no-charge, royalty-free, irrevocable copyright license to reproduce, prepare Derivative Works of, publicly display, publicly perform, sublicense, and distribute the Work and such Derivative Works in Source or Object form.

3. Grant of Patent License. Subject to the terms and conditions of this License, each Contributor hereby grants to You a perpetual, worldwide, non-exclusive, no-charge, royalty-free, irrevocable (except as stated in this section) patent license to make, have made, use, offer to sell, sell, import, and otherwise transfer the Work, where such license applies only to those patent claims licensable by such Contributor that are necessarily infringed by their Contribution(s) alone or by combination of their Contribution(s) with the Work to which such Contribution(s) was submitted. If You institute patent litigation against any entity (including a cross-claim or counterclaim in a lawsuit) alleging that the Work or a Contribution incorporated within the Work constitutes direct or contributory patent infringement, then any patent licenses granted to You under this License for that Work shall terminate as of the date such litigation is filed.

4. Redistribution. You may reproduce and distribute copies of the Work or Derivative Works thereof in any medium, with or without modifications, and in Source or Object form, provided that You meet the following conditions:

   (a)You must give any other recipients of the Work or Derivative Works a copy of this License; and

   (b)You must cause any modified files to carry prominent notices stating that You changed the files; and

   (c)You must retain, in the Source form of any Derivative Works that You distribute, all copyright, patent, trademark, and attribution notices from the Source form of the Work, excluding those notices that do not pertain to any part of the Derivative Works; and

   (d)If the Work includes a "NOTICE" text file as part of its distribution, then any Derivative Works that You distribute must include a readable copy of the attribution notices contained within such NOTICE file, excluding those notices that do not pertain to any part of the Derivative Works, in at least one of the following places: within a NOTICE text file distributed as part of the Derivative Works; within the Source form or documentation, if provided along with the Derivative Works; or, within a display generated by the Derivative Works, if and wherever such third-party notices normally appear. The contents of the NOTICE file are for informational purposes only and do not modify the License. You may add Your own attribution notices within Derivative Works that You distribute, alongside or as an addendum to the NOTICE text from the Work, provided that such additional attribution notices cannot be construed as modifying the License.

   You may add Your own copyright statement to Your modifications and may provide additional or different license terms and conditions for use, reproduction, or distribution of Your modifications, or for any such Derivative Works as a whole, provided Your use, reproduction, and distribution of the Work otherwise complies with the conditions stated in this License.

5. Submission of Contributions. Unless You explicitly state otherwise, any Contribution intentionally submitted for inclusion in the Work by You to the Licensor shall be under the terms and conditions of this License, without any additional terms or conditions. Notwithstanding the above, nothing herein shall supersede or modify the terms of any separate license agreement you may have executed with Licensor regarding such Contributions.
6. Trademarks. This License does not grant permission to use the trade names, trademarks, service marks, or product names of the Licensor, except as required for reasonable and customary use in describing the origin of the Work and reproducing the content of the NOTICE file.
7. Disclaimer of Warranty. Unless required by applicable law or agreed to in writing, Licensor provides the Work (and each Contributor provides its Contributions) on an "AS IS" BASIS, WITHOUT WARRANTIES OR CONDITIONS OF ANY KIND, either express or implied, including, without limitation, any warranties or conditions of TITLE, NON-INFRINGEMENT, MERCHANTABILITY, or FITNESS FOR A PARTICULAR PURPOSE. You are solely responsible for determining the appropriateness of using or redistributing the Work and assume any risks associated with Your exercise of permissions under this License.
8. Limitation of Liability. In no event and under no legal theory, whether in tort (including negligence), contract, or otherwise, unless required by applicable law (such as deliberate and grossly negligent acts) or agreed to in writing, shall any Contributor be liable to You for damages, including any direct, indirect, special, incidental, or consequential damages of any character arising as a result of this License or out of the use or inability to use the Work (including but not limited to damages for loss of goodwill, work stoppage, computer failure or malfunction, or any and all other commercial damages or losses), even if such Contributor has been advised of the possibility of such damages.
9. Accepting Warranty or Additional Liability. While redistributing the Work or Derivative Works thereof, You may choose to offer, and charge a fee for, acceptance of support, warranty, indemnity, or other liability obligations and/or rights consistent with this License. However, in accepting such obligations, You may act only on Your own behalf and on Your sole responsibility, not on behalf of any other Contributor, and only if You agree to indemnify, defend, and hold each Contributor harmless for any liability incurred by, or claims asserted against, such Contributor by reason of your accepting any such warranty or additional liability.

END OF TERMS AND CONDITIONS

APPENDIX: How to apply the Apache License to your work.

> To apply the Apache License to your work, attach the following boilerplate notice, with the fields enclosed by brackets "[]" replaced with your own identifying information. (Don't include the brackets!) The text should be enclosed in the appropriate comment syntax for the file format. We also recommend that a file or class name and description of purpose be included on the same "printed page" as the copyright notice for easier identification within third-party archives.

Copyright [yyyy] [name of copyright owner]

Licensed under the Apache License, Version 2.0 (the "License"); you may not use this file except in compliance with the License. You may obtain a copy of the License at

> http://www.apache.org/licenses/LICENSE-2.0

Unless required by applicable law or agreed to in writing, software distributed under the License is distributed on an "AS IS" BASIS, WITHOUT WARRANTIES OR CONDITIONS OF ANY KIND, either express or implied. See the License for the specific language governing permissions and limitations under the License.

Energy Saving Control Function

The device comes equipped with a Low Power Mode where energy consumption is reduced after a certain amount of time elapses since the device was last used, as well as a Sleep where printer and fax functions remain in a waiting state but power consumption is still reduced to a minimum when there is no activity with the device within a set amount of time.

- Low Power Mode (page 2-39)
- Sleep (page 2-39)
- Power Off Timer (models for Europe) (page 2-41)

Automatic 2-Sided Print Function

This device includes 2-sided printing as a standard function. For example, by printing two 1-sided originals onto a single sheet of paper as a 2-sided print, it is possible to lower the amount of paper used.

- Duplex (page 6-52)

Printing in duplex mode reduces paper consumption and contributes to the conservation of forest resources. Duplex mode also reduces the amount of paper that must be purchased, and thereby reduces cost. It is recommended that machines capable of duplex printing be set to use duplex mode by default.

Resource Saving - Paper

For the preservation and sustainable use of forest resources, it is recommended that recycled as well as virgin paper certified under environmental stewardship initiatives or carrying recognised ecolabels, which meet EN 12281:2002* or an equivalent quality standard, be used.

This machine also supports printing on 64 g/m^2 paper. Using such paper containing less raw materials can lead to further saving of forest resources.

* : EN12281:2002 "Printing and business paper - Requirements for copy paper for dry toner imaging processes"

Your sales or service representative can provide information about recommended paper types.

Environmental benefits of "Power Management"

To reduce power consumption when idle, this machine is equipped with a power management function that automatically activates energy-saving mode when the machine is idle for a certain period of time.
Although it takes the machine a slight amount of time to return to READY mode when in energy-saving mode, a significant reduction in energy consumption is possible. It is recommended that the machine be used with the activation time for energy-saving mode set to the default setting.

Energy Star (ENERGY STAR®) Program

We have determined as a participating company in the International Energy Star Program that this product is compliant with the standards laid out in the International Energy Star Program.

ENERGY STAR® is a voluntary energy efficiency program with the goal of developing and promoting the use of products with high energy efficiency in order to help prevent global warming. By purchasing ENERGY STAR® qualified products, customers can help reduce emissions of greenhouse gases during product use and cut energy-related costs.

2 Installing and Setting up the Machine

This chapter provides information for the administrator of this machine, such as part names, cable connection, and software installation.

Part Names (Machine Exterior) 2-2
Part Names (Connectors/Interior) 2-4
Part Names (With Optional Equipments Attached) 2-5
Connecting the Machine and Other Devices 2-6
Connecting Cables 2-7
Connecting LAN Cable 2-7
Connecting USB Cable 2-8
Connecting the Power Cable 2-8
Power On/Off 2-9
Power On 2-9
Power Off 2-9
Using the Operation Panel 2-10
Operation Panel Keys 2-10
Adjusting the Operation Panel Angle . 2-11
Assigning Functions to Function Keys 2-12
Touch Panel 2-14
Home Screen 2-14
Display for Device Information 2-18
Display Setting Screen 2-18
Functions Key 2-19
Using the Screen 2-19
Display of Keys That Cannot Be Set 2-20
Original Preview 2-20
Entering Numbers 2-23
Using the Enter Key 2-24
Using the Quick No. Search Key 2-24
Help Screen 2-25
Accessibility Functions (Magnifying the View) 2-26
Login/Logout 2-27
Login 2-27
Logout 2-28
Default Settings of the Machine 2-29
Setting Date and Time 2-29
Network Setup 2-30
Configuring the Wired Network 2-30
Configuring the Wireless Network 2-32
Setting Wi-Fi Direct 2-36
Configuring NFC 2-38
Energy Saver Function 2-39
Low Power Mode 2-39
Sleep 2-39
Auto Sleep 2-40
Sleep Rules (models for Europe) 2-40
Sleep Level (Energy Saver) (models except for Europe) 2-40
Energy Saver Recovery Level 2-40
Weekly Timer Settings 2-40
Power Off Timer (models for Europe) 2-41
Quick Setup Wizard 2-42
Installing Software 2-45
Software on DVD (Windows) 2-45
Installing Software in Windows 2-46
Uninstalling the Software 2-51
Installing Software in Mac Computer 2-53
Setting TWAIN Driver 2-55
Setting WIA Driver 2-57
Checking the Counter 2-58
Additional Preparations for the Administrator 2-59
Sending Documents to a PC 2-59
Strengthening the Security 2-59
Command Center RX 2-61
Accessing Command Center RX 2-62
Changing Security Settings 2-63
Changing Device Information 2-64
E-mail Settings 2-65
Registering Destinations 2-69
Creating a New Custom Box 2-70
Printing a document stored in a Custom Box 2-71
Transferring Data from Our Other Products 2-73
Migrating the Address Book 2-73

Part Names (Machine Exterior)

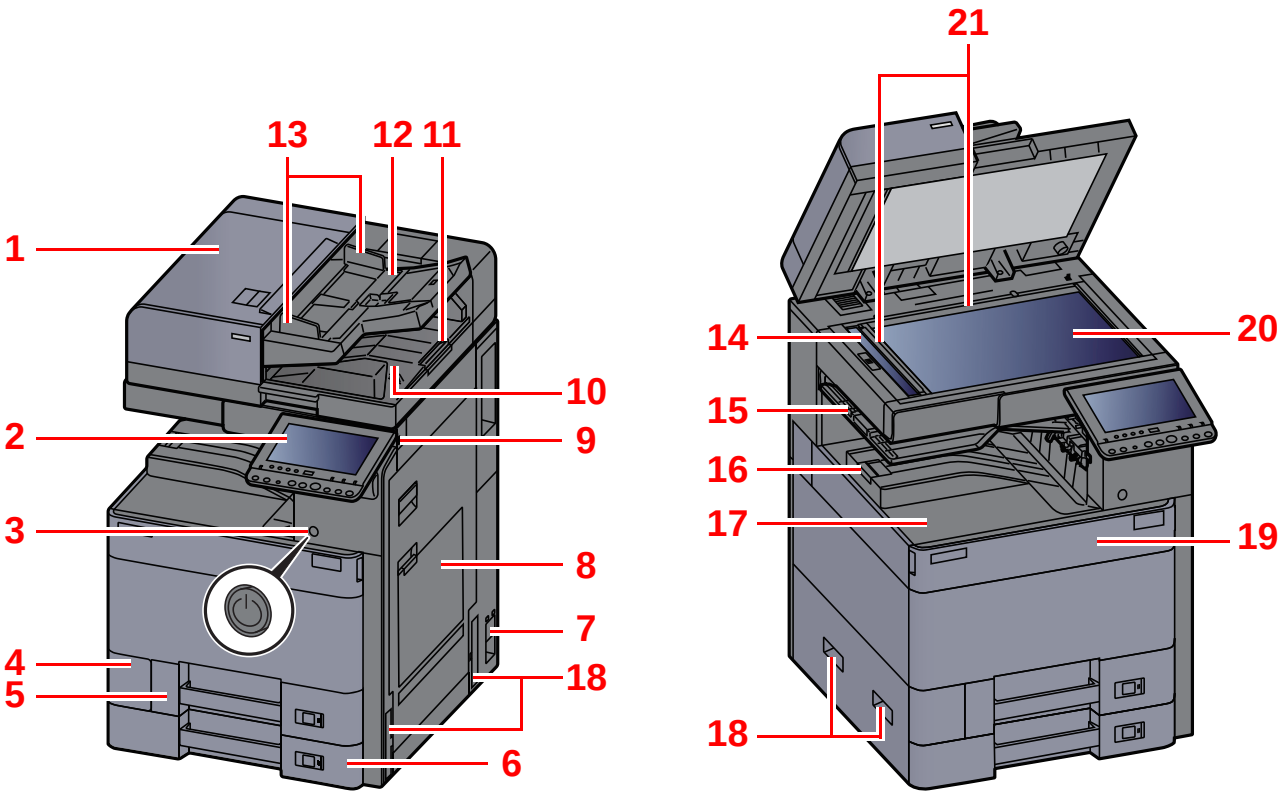

1 Document Processor
2 Operation Panel
3 Power Switch
4 Waste Toner Box Cover
5 Cassette 1
6 Cassette 2
7 Main Power Switch
8 Multi Purpose Tray
9 USB Memory Slot
10 Original Eject Table
11 Original Stopper
12 Original Table
13 Original Width Guides
14 Slit Glass
15 Job Separator Tray (Only 2552ci)
16 Paper Stopper
17 Inner Tray
18 Handles
19 Front Cover
20 Platen
21 Original Size Indicator Plates

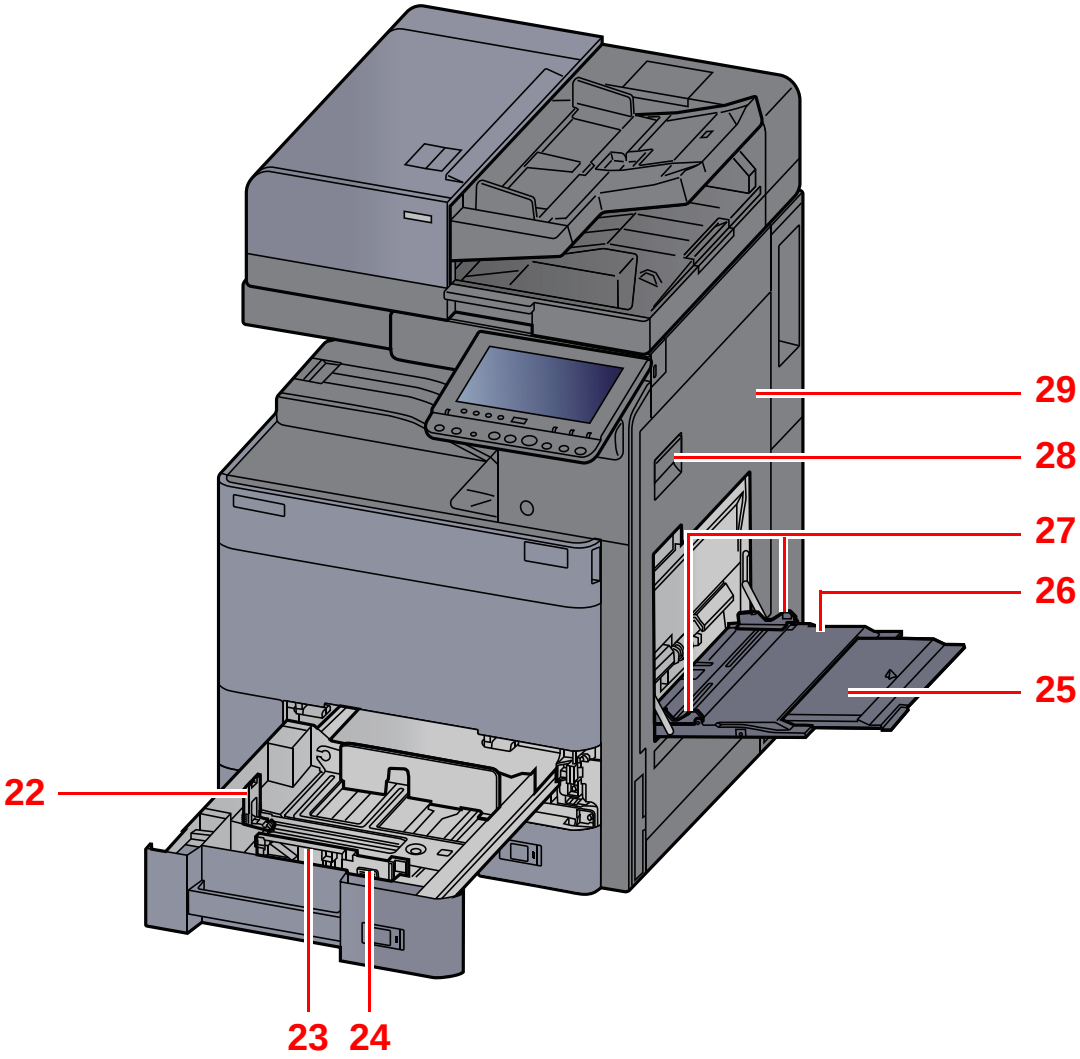

22 Paper Length Guide

23 Paper Width Guide

24 Paper Width Adjusting Tab

25 Support Tray Section of the Multi Purpose Tray

26 Multi Purpose Tray

27 Paper Width Guide

28 Right Cover 1 Lever

29 Right Cover 1

Part Names (Connectors/Interior)

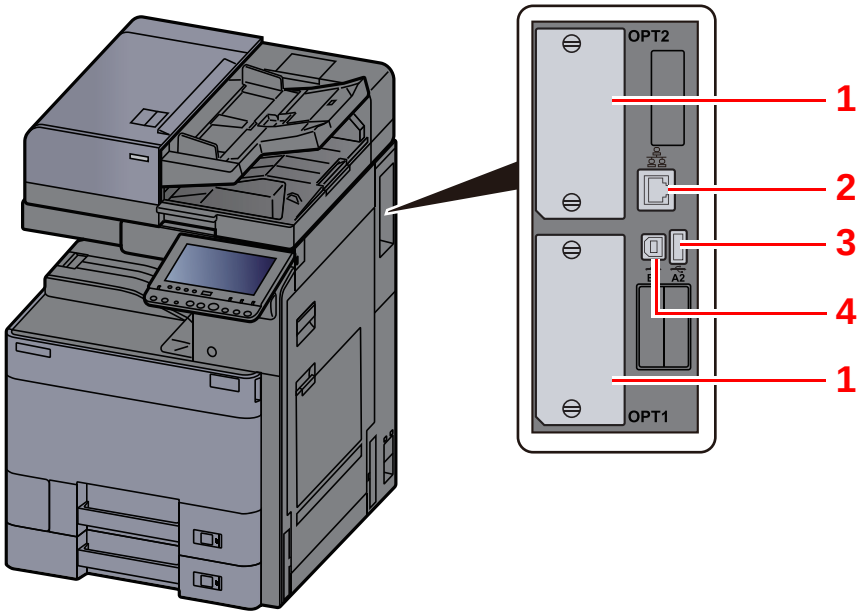

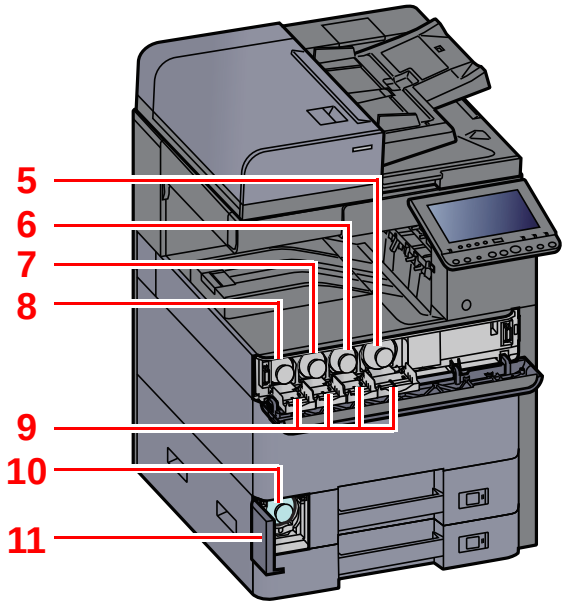

1 Option Interface Slot
2 Network Interface Connector
3 USB Port
4 USB Interface Connector
5 Toner Container (Black)
6 Toner Container (Magenta)
7 Toner Container (Cyan)
8 Toner Container (Yellow)
9 Toner Container Cover
10 Waste Toner Box
11 Waste Toner Box Cover

Part Names (With Optional Equipments Attached)

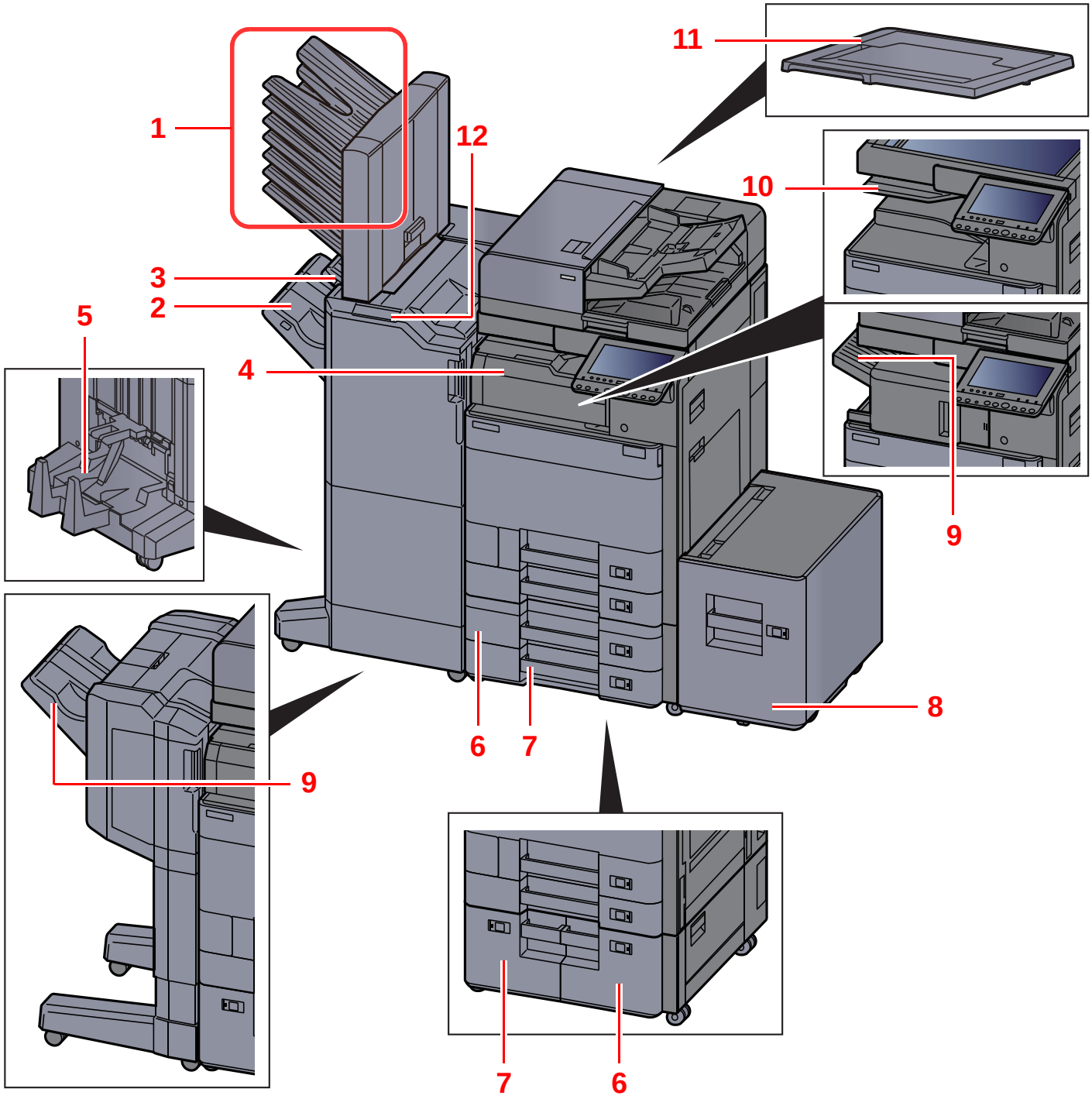

1 Tray 1 to 7 (tray 1 is the top tray)

2 Tray A

3 Tray B

4 Job Separator Tray

5 Folding Tray

6 Cassette 3

7 Cassette 4

8 Cassette 5

9 Finisher Tray

10 Job Separator Tray*1

11 Original Cover

12 Control Section of the Finisher

Optional Equipment (page 11-2)

Manual Staple (page 5-73)

*1 JS-7100 is standard on 2552ci.

Connecting the Machine and Other Devices

Prepare the cables necessary to suit the environment and purpose of the machine use.

When Connecting the Machine to the PC via USB

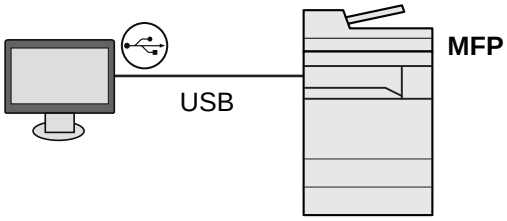

When Connecting the Machine to the PC on the Network

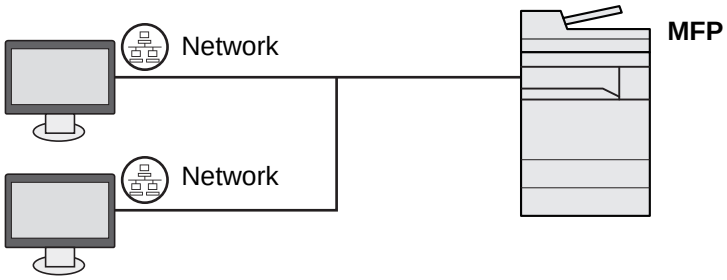

NOTE

If you are using the machine with the optional wireless interface kit attached, you do not need to connect the LAN cable. To use a wireless LAN, it is necessary to change the default settings for the machine using the System Menu.

Optional Network (page 8-60)

Cables that Can Be Used

Connection Environment	Function	Necessary Cable
Connect a LAN cable to the machine.	Printer/Scanner/Network FAX*1	LAN cable (10BASE-T, 100BASE-TX, 1000BASE-T)
Connect a USB cable to the machine.	Printer	USB2.0 compatible cable (Hi-Speed USB compliant, Max. 5.0 m)

*1 Function available when using optional FAX kit. For more information on using the Network FAX, refer to the **FAX Operation Guide**.

Connecting Cables

Connecting LAN Cable

IMPORTANT

If the power is on, turn the power switch off.

Power Off (page 2-9)

1 Connect the cable to the machine.

1 Connect the LAN cable to the network interface connector.

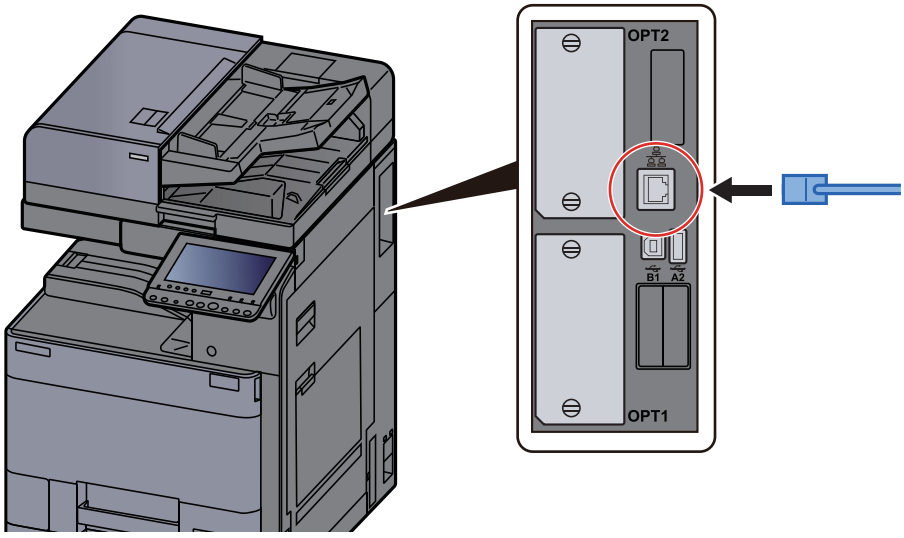

2 Connect the other end of the cable to the hub.

2 Power on the machine and configure the network.

Network Setup (page 2-30)

Connecting USB Cable

IMPORTANT

If the power is on, turn the power switch off.

Power Off (page 2-9)

1 Connect the cable to the machine.

1 Connect the USB cable to the USB interface connector located on the right side of the body.

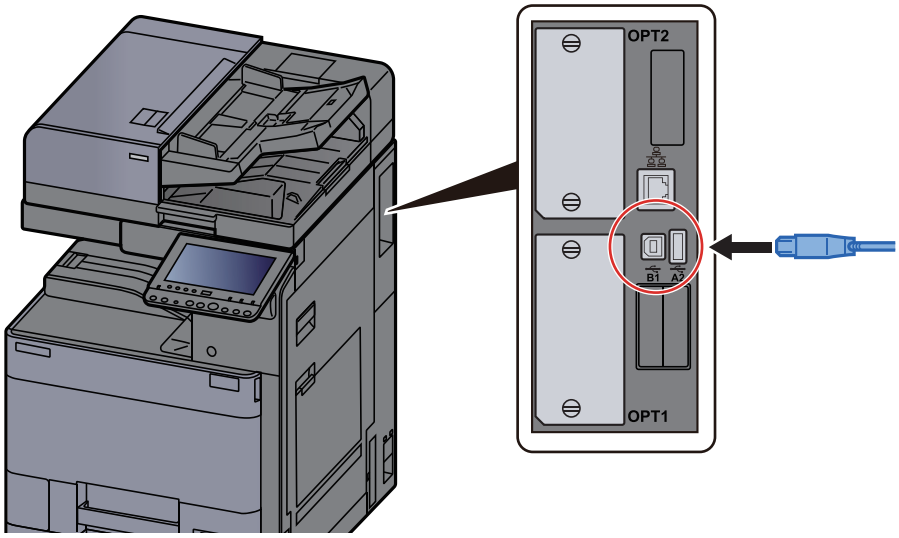

2 Connect the other end of the cable to the PC.

2 Power on the machine.

Connecting the Power Cable

1 Connect the cable to the machine.

Connect one end of the supplied power cable to the machine and the other end to a power outlet.

IMPORTANT

Only use the power cable that comes with the machine.

Power On/Off

Power On

1 Turn the power switch on.

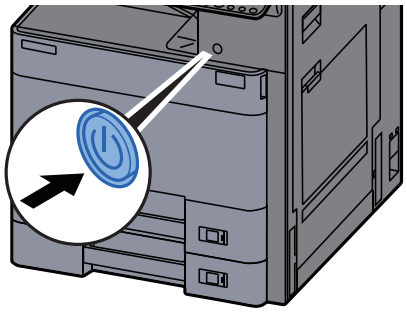

Power Off

1 Turn the power switch off.

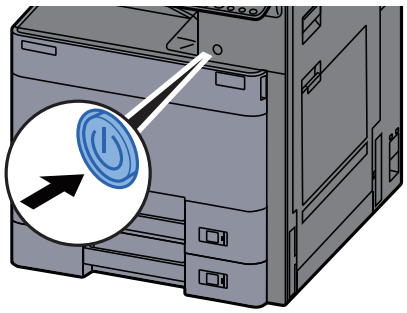

The confirmation message for power supply off is displayed when [**Show Power Off Message**] is set to [**On**].

It takes about 3 minutes for power off.

CAUTION

If this machine will be left unused for an extended period (e.g. overnight), turn it off at the power switch. If the machine will not be used for an even longer period of time (e.g. vacation), remove the power plug from the outlet as a safety precaution.

IMPORTANT

If using the products equipped with the fax function, note that turning the machine off at the power switch disables fax transmission and reception. Remove paper from the cassettes and seal it in the paper storage bag to protect it from humidity.

Using the Operation Panel

Operation Panel Keys

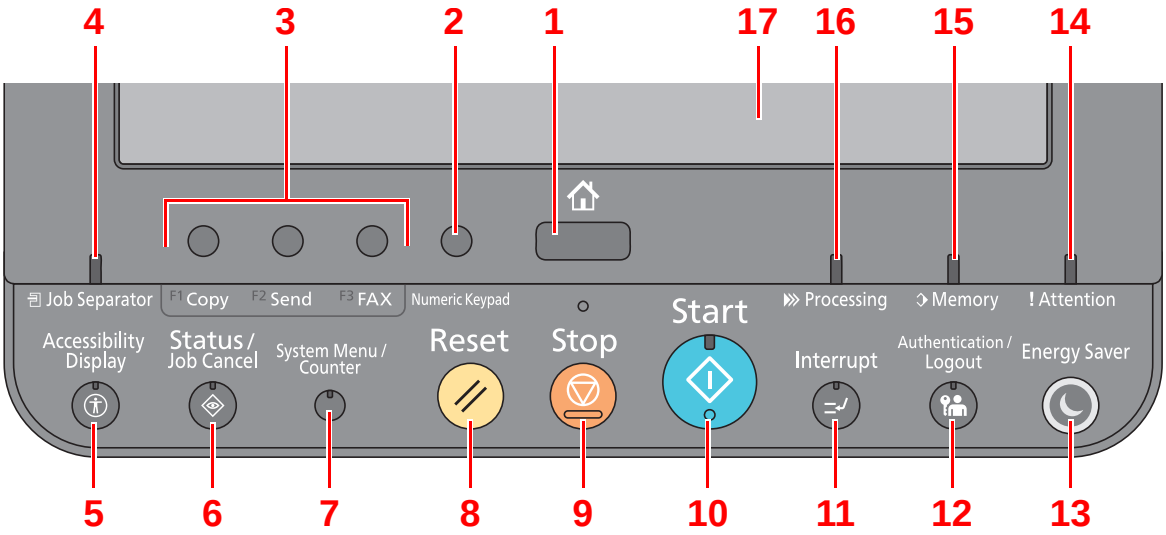

1 [**Home**] key: Displays the Home screen.

2 [**Numeric Keypad**] key: Displays numeric keys on the touch panel.

3 Function Key: These keys enable various functions and applications, including copy and scan, to be registered.

Assigning Functions to Function Keys (page 2-12)

4 [**Job Separator**] indicator: Lights when there is paper in the job separator tray.

5 [**Accessibility Display**] key: Switches the touch panel display on the Copy screen and the Send screen to a magnified view.

6 [**Status/Job Cancel**] key: Displays the Status/Job Cancel screen.

7 [**System Menu/Counter**] key: Displays the System Menu screen.

8 [**Reset**] key: Returns settings to their default states.

9 [**Stop**] key: Cancels or pauses the job in progress.

10 [**Start**] key: Starts copying and scanning operations and processing for setting operations.

11 [**Interrupt**] key: Displays the Interrupt Copy screen.

12 [**Authentication/Logout**] key: Authenticates user switching, and exits the operation for the current user (i.e. log out).

13 [**Energy Saver**] key: Puts the machine into Sleep Mode. Recovers from Sleep if in Sleep Mode.

14 [**Attention**] indicator: Lights or blinks when an error occurs and a job is stopped.

15 [**Memory**] indicator: Blinks while the machine is accessing the hard disk, fax memory or USB memory (general purpose item).

16 [**Processing**] indicator: Blinks while printing or sending/receiving.

17 Touch Panel: Displays icons for configuring machine settings.

Adjusting the Operation Panel Angle

The angle of the operation panel can be adjusted.

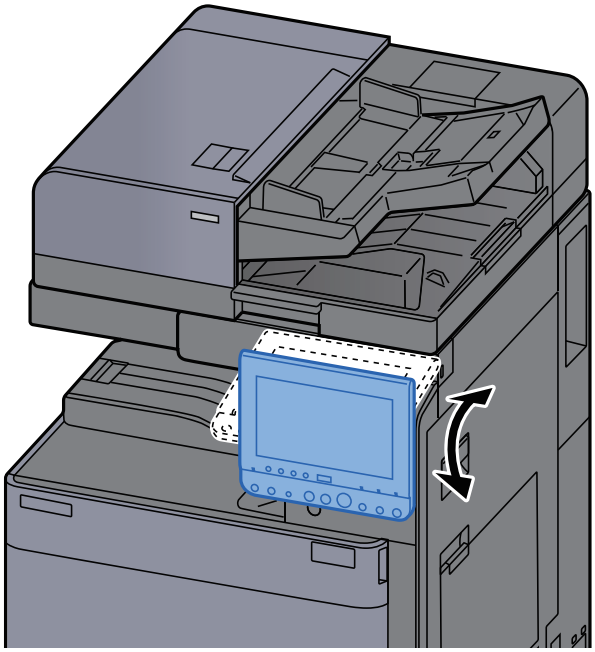

Assigning Functions to Function Keys

Function keys are keys to which various functions and applications, including copy and scan, can be assigned. Frequently used functions and applications can be assigned and the screen can easily be displayed.

For this machine, the following functions are pre-assigned; however, alternative functions can be registered by re-assigning these functions.

- [**F1**] (Function key 1): Copy
- [**F2**] (Function key 2): Send
- [**F3**] (Function key 3): FAX (Option)

1 Display the screen.

[**System Menu/Counter**] key > [**Common Settings**] > [**Function Key Assignment**]

NOTE

If user login administration is enabled, you can only change the settings by logging in with administrator privileges. The factory default login user name and login password are set as shown below.

Model Name	Login User Name	Login Password
2552ci	2500	2500
3252ci	3200	3200
3552ci	3500	3500
4052ci	4000	4000
5052ci	5000	5000
6052ci	6000	6000

2 Configure the settings.

1 Select [**Change**] to enable the function key to be set.

2 Select the function to be assigned.

Function	Description	Reference page
None	No function has been assigned.	—
Copy	Displays the Copy screen.	page 5-20
Send	Displays the Send screen.	page 5-24
FAX[*1]	Displays the FAX screen.	Refer to the **FAX Operation Guide**.
Custom Box	Displays the Custom Box screen.	page 5-55
Job Box	Displays the Job Box screen.	page 4-18
Removable Memory	Displays the Removable Memory screen.	page 5-67
FAX Box[*1]	Displays the FAX Box screen.	Refer to the **FAX Operation Guide**.

Function	Description	Reference page
Send to Me (E-mail)*2	Displays the Send screen. The E-mail address of the logged-in user is set as the destination.	page 5-41
Send to Me from Box (E-mail)*2	Displays the Custom Box screen. The E-mail address of the logged-in user is set as the destination.	page 5-60
Internet Browser	Displays the Internet Browser screen.	page 5-71
Program	Calls up the registered program. The icon will change according to the function of the program.	page 5-11
Application Name	Displays the selected applications.	page 5-14

*1 Displayed only on products with the fax function installed.
*2 Displayed when user login administration is enabled.

Touch Panel

Home Screen

This screen is displayed by selecting the [**Home**] key on the operation panel. Touching an icon will display the corresponding screen.

You can change the icons to display on the Home screen as well as its background.

Editing the Home Screen (page 2-15)

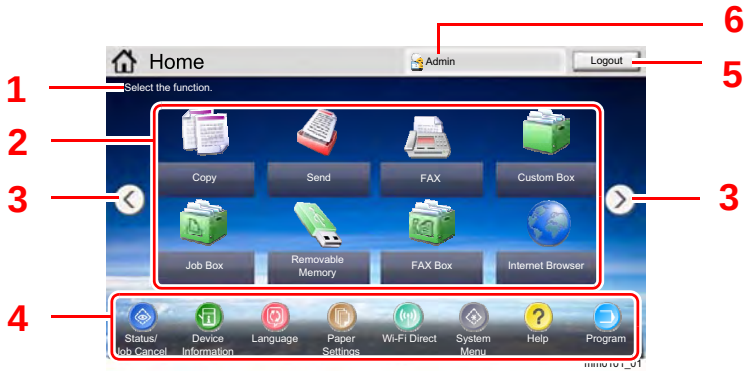

* The appearance may differ from your actual screen, depending on your configuration and option settings.

No.	Item	Description
1	Message	Displays the message depending on the status.
2	Desktop	Displays function icons including the functions registered in program. Icons that are not displayed on the first page will appear by changing the page.
3	Screen-switching keys	Use these buttons to switch between desktop pages. **NOTE** You can also switch views by touching the screen and moving the finger sideways (i.e. swiping). 
4	Taskbar	Displays task icons.
5	[**Logout**]	Logs out the current user. This is displayed when user login administration is enabled.
6	Login User Name	Displays the logged-in user name. This is displayed when user login administration is enabled. Selecting "Login User Name" will display the information of the logged-in user.

Editing the Home Screen

You can change the background of the Home screen as well as which icons are displayed.

1 Display the screen.

1 [**System Menu/Counter**] key > [**Home**]

NOTE

If user login administration is enabled, you can only change the settings by logging in with administrator privileges. The factory default login user name and login password are set as shown below.

Model Name	Login User Name	Login Password
2552ci	2500	2500
3252ci	3200	3200
3552ci	3500	3500
4052ci	4000	4000
5052ci	5000	5000
6052ci	6000	6000

2 Configure the settings.

The available settings are shown below.

Item	Description
Customize Desktop	Specify the function icons to display on the desktop.*1 Select [**Add**] to display the screen for selecting the function to display. Select the function to display and [**OK**]. Select an icon and [**Previous**] or [**After**] to change the display position of the selected icon on the Desktop. To delete an icon from desktop, select the desired one and select [**Delete**].
Customize Taskbar	Specify the task icons to display on the taskbar.*2
Wallpaper	Configure the wallpaper of the Home screen. **Value**: Images 1 to 8

*1 Displays a maximum of 59 function icons including the installed applications and the functions that can be used when options are installed.

*2 8 task icons can be displayed.

Available Functions to Display on Desktop

Function	Icon	Description	Reference page
Copy[*1]		Displays the Copy screen.	page 5-20
Send[*1]		Displays the Send screen.	page 5-24
FAX[*2]		Displays the FAX screen.	Refer to the **FAX Operation Guide**.
Custom Box[*1]		Displays the Custom Box screen.	page 5-55
Job Box[*1]		Displays the Job Box screen.	page 4-18
Removable Memory[*1]		Displays the Removable Memory screen.	page 5-67
FAX Box[*2]		Displays the FAX Box screen.	Refer to the **FAX Operation Guide**.
Internet Browser		Displays the Internet Browser screen.	page 5-71
Send to Me (E-mail)[*3]		Displays the Send screen. The E-mail address of the logged-in user is set as the destination.	page 5-41
Send to Me from Box (E-mail)[*3]		Displays the Custom Box screen. The E-mail address of the logged-in user is set as the destination.	page 5-60
Program		Calls up the registered program. The icon will change according to the function of the program.	page 5-11
Application Name[*4]		Displays the selected applications.	page 5-14

*1 Selected at the time of shipment from factory.
*2 Displayed only on products with the fax function installed.
*3 Displayed when user login administration is enabled.
*4 The icon of the application appears.

Available Functions to Display on Taskbar

Function	Icon	Description	Reference page
Status/Job Cancel[*1]	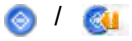	Displays the Status screen. If an error occurs, the icon will show "!". Once the error clears, the display will return to normal.	—
Device Information[*1]		Displays the Device Information screen. Check the system and network information. You can also check information on the options that are used.	page 2-18
Language[*1]		Displays the Language setting screen in System Menu.	page 8-10
Paper Setting[*1]		Displays the Paper setting screen in System Menu.	page 8-7
Wi-Fi Direct		Wi-Fi Direct is set and a list of information relating to the machine that can use the network appears.	page 8-51
System Menu[*1]		Displays the System Menu screen.	page 8-2
Help[*1]		Displays the Help screen.	page 2-25
Program[*1]		Displays the program list screen.	page 5-11
Accessibility/ Standard		Magnifies the text and icons on the screen. Pressing the Accessibility icon switches the icon to the Standard icon. Press the Standard icon to return to the previous view.	page 2-26
Message Board		Displays the Message Board screen. **NOTE** To use this function, set "Message Board" to [**ON**] in System Menu. **Command Center RX User Guide**	page 8-31

*1 Selected at the time of shipment from factory.

Display for Device Information

Shows device information. Allows you to check system and network information, as well as options that are used.

1 [**Home**] key > [**Device Information**]

2 Check the device information.

Tab	Description
Identification/Wired Network	You can check ID information such as the model name, serial number, host name and location, and the IP address of the wired network.
Wi-Fi	You can check ID information such as the model name, serial number, host name and location, and the IP address of the wireless network.
FAX[*1]	You can check the local fax number, local fax name, local fax ID and other fax information.
Software Ver./Capability	You can check the software version and performance.
Option	You can check information on the options that are used.

*1 Displayed only on products with the fax function installed.

Display Setting Screen

The following procedure is an example of the Copy screen.

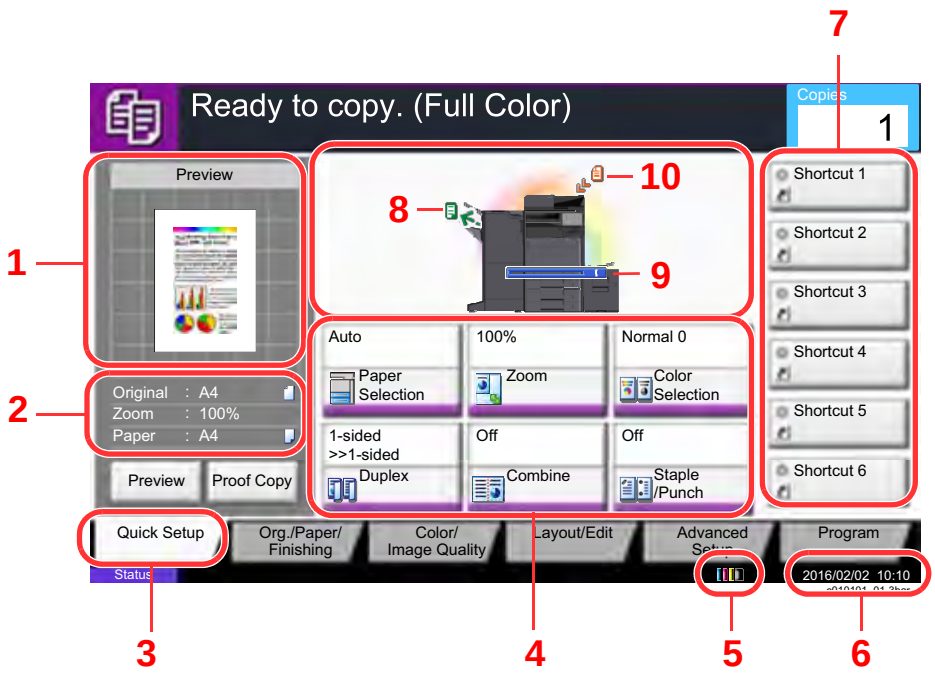

1 Shows an image of the output paper.

2 Original : Shows the original size when the original is placed.
Zoom : Shows the magnification of the document to be printed.
Paper : Shows the size of the output paper.

3 Displays the Quick Setup screen.

4 Set the copy functions.

5 Remaining amount of toner.

6 Displays the time.

7 Displays registered shortcuts.

8 Displays the output tray.

9 Displays the paper source.

10 Displays the original position.

Functions Key

To configure the settings for functions, select the tab and press the function key.

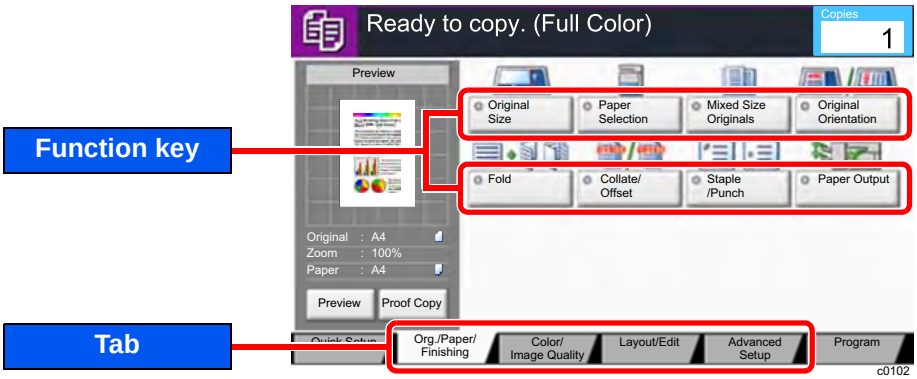

Using the Screen

Touch panel keys that are pressed are outlined in red.

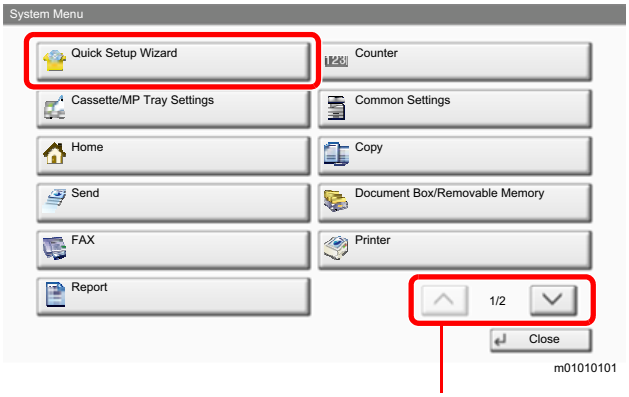

Select [∧] or [∨] to scroll up and down.

Display of Keys That Cannot Be Set

Keys of features that cannot be used due to feature combination restrictions or non-installation of options are in a non-selectable state.

Normal	Grayed out	Hidden
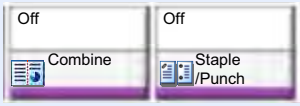	 In the following cases, the key is grayed out and cannot be selected. • Cannot be used in combination with a feature that is already selected. • Use prohibited by user control. • [**Preview**] has been selected. • For functions that cannot be changed when using proof copy.	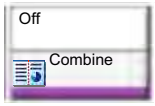 Cannot be used because an option is not installed.

NOTE

If a key that you wish to use is grayed out, the settings of the previous user may still be in effect. In this case, select the [**Reset**] key and try again.

If the key is still grayed out after the [**Reset**] key is selected, it is possible that you are prohibited from using the function by user control. Check with the administrator of the machine.

Original Preview

You can display a preview image of the scanned document on the panel.

NOTE

- To view a preview of an image stored in a Custom Box, refer to the following:
  Previewing Documents/Checking Document Details (page 5-54)
- The procedure described here is for copying a single-page original.

1 Display the screen.

[**Home**] key > [**Copy**] key

2 Place the originals.

3 Display a preview image.

1 Select [**Preview**].

The machine starts scanning the original. When scanning is completed, the preview image appears on the panel.

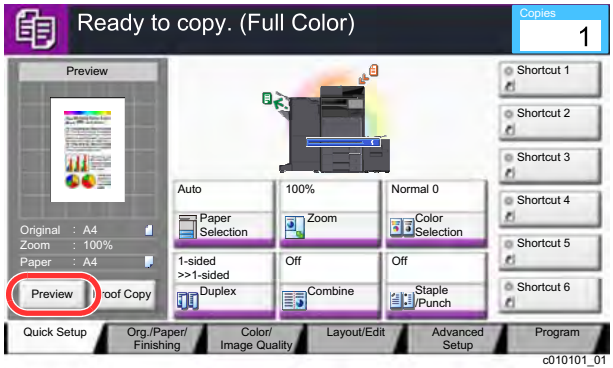

2 Select [**Detail**].

You can check the finished image in greater detail.

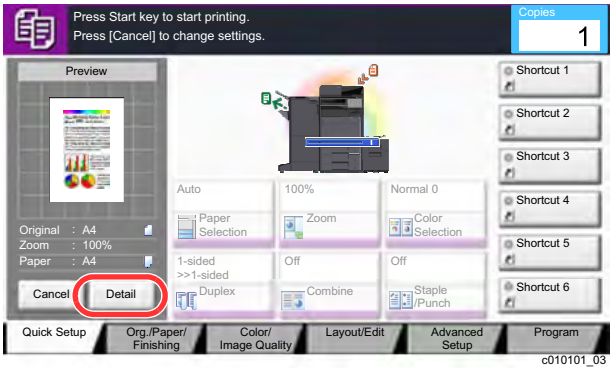

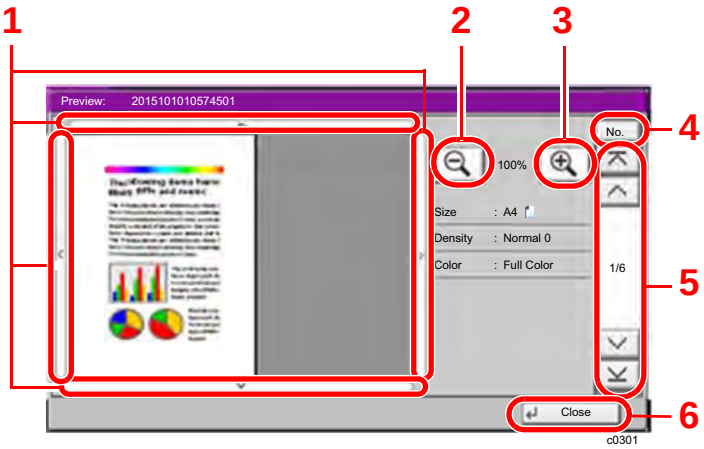

1 In magnified view, you can move the range of display.

2 Zoom out.

3 Zoom in.

4 In multiple-page documents, you can change pages by entering the desired page number.

5 In multiple-page documents, you can use these buttons to change pages.

6 Close the Preview screen.

Duplex Printing

Settings for duplex printing appear.

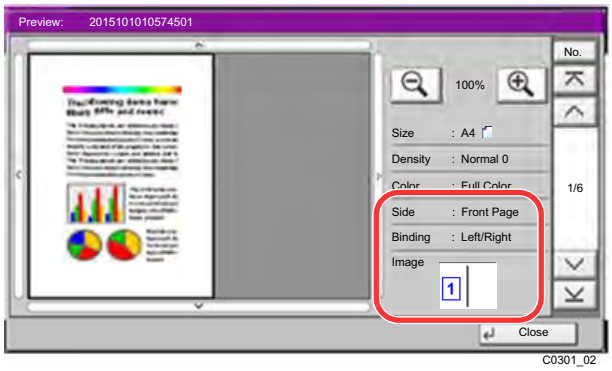

NOTE

- To change the quality or the layout, select [**Cancel**] or the [**Stop**] key. Change the settings and select [**Preview**] again to see a preview image with the new settings.
- Depending on the function you are using, even if you scan a multi-page original, only the first page can be previewed.

3 If there is no problem with the preview image, press the [**Start**] key.

Copying starts.

Using the Preview Screen

When the Preview screen is displayed, you can do the following by moving the finger that is touching the touch panel.

Function	Description
Drag	With the finger touching the touch panel, slide the finger to move the position of the displayed preview.
Pinch in **Pinch out**	With two fingers touching the touch panel, widen or tighten the space between the two fingers to zoom in and out on the view.

Entering Numbers

When entering numbers, numeric keys appear on the touch panel if you select the [**Numeric Keypad**] key on the operation panel or select the area in which the number is entered.

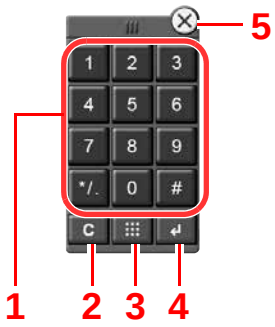

1 Enter numbers and symbols.

2 Clear entered numbers.

3 Quick No. Search key.

➡ Using the Quick No. Search Key (page 2-24)

4 Entry by numeric keys is confirmed.

➡ Using the Enter Key (page 2-24)

5 Close the numeric keypad.

NOTE

- Numeric keys do not appear on the touch panel if an optional numeric keypad is installed.
- Alphabetic letters appear on numeric keys if an optional FAX Kit is installed. Alphabetic letters are used to remember the FAX number.

Example: When entering the number of copies

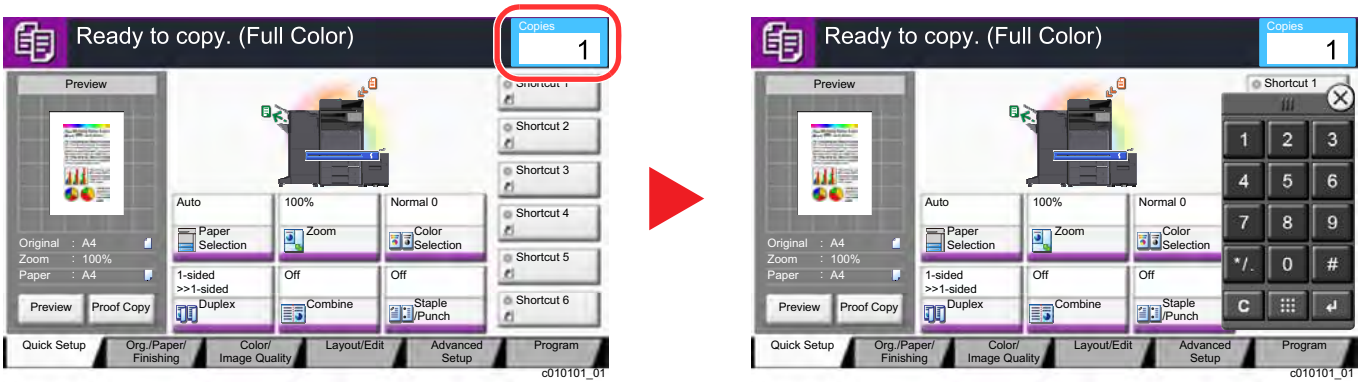

Example: When entering a one-touch key number



Example: When searching for an address number

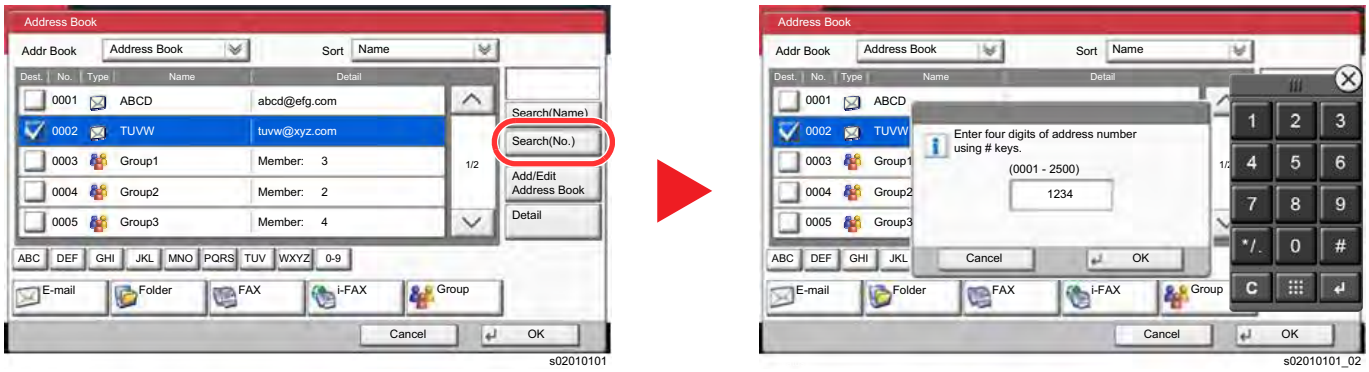

NOTE

- Moving your finger while touching the top of the numeric keypad enables you to freely move to any key. (Drag operation)

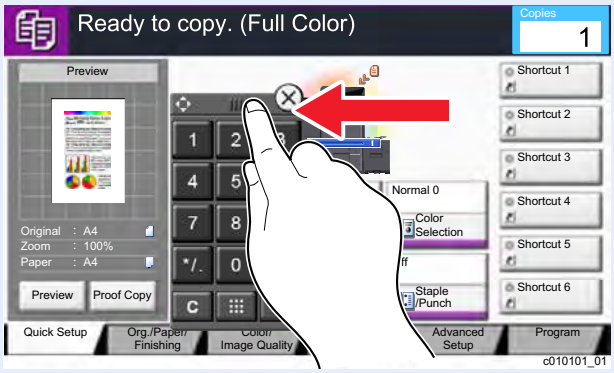

- For copy and print screens, you can set numeric keys to be displayed in advance. In addition, you can select the layout for numeric keys that are used on the application.

Numeric Keypad Settings (page 8-32)

Using the Enter Key

The Enter key has the same function as the key with the Enter mark (↵), such as the [**OK** ↵] key and the [**Close** ↵].

Using the Quick No. Search Key

The Quick No. Search key performs the same action as the [**No.**] displayed on the touch panel. Use the Quick No. Search keys to perform an action by simply entering a number directly using the numeric keys. For example, you can specify the speed dial for a transmission destination or recall a stored program by its program number.

For more information on speed dialing, refer to the following:

Specifying Destination (page 5-43)

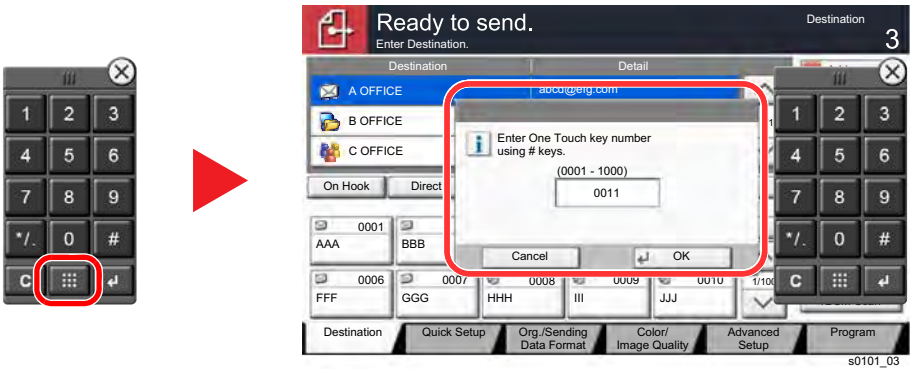

Help Screen

If you have difficulty operating the machine, you can check how to operate it using the touch panel.

To show the Help screen for a function, select [**Help**] on the panel of the setting screen of that function. The Help screen shows explanations of functions and how to use them.

1 Display the Paper Selection screen.

Paper Selection (page 6-19)

2 Select [Help] on the panel.

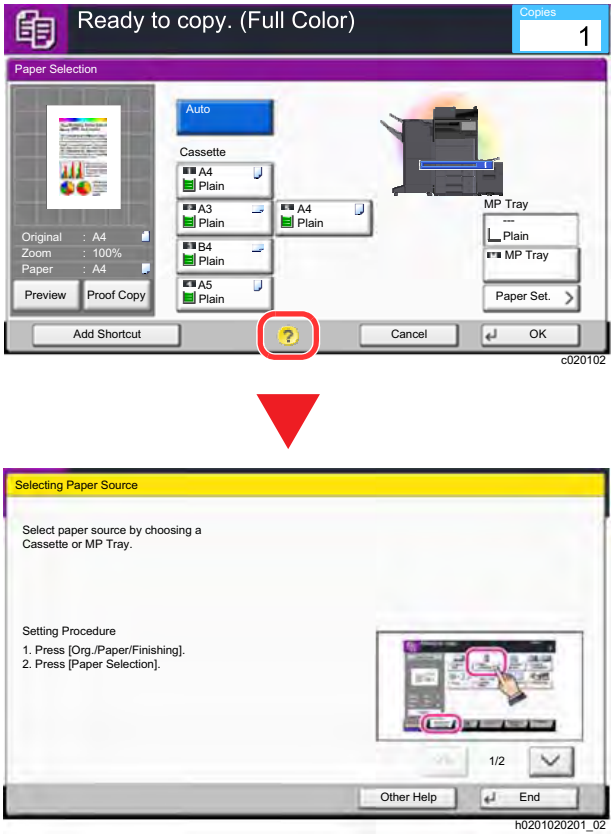

Selecting [Help] on the Home Screen

Show the Help list.

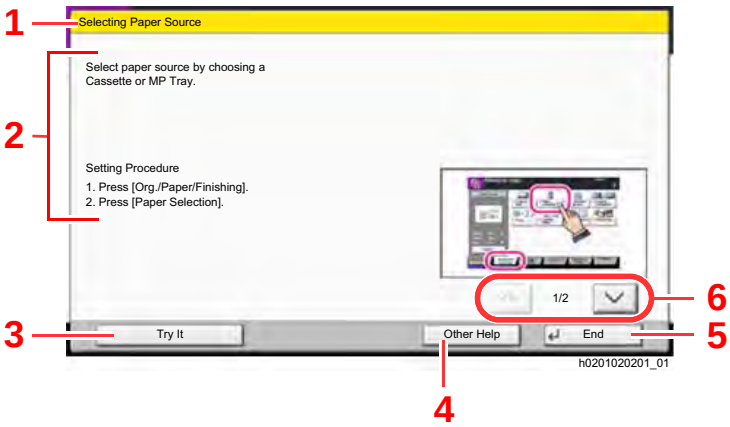

1 Help titles.

2 Displays information about functions and machine operation.

3 Show the screen of the tab that includes the function explained in Help. (In the case of this screen, the screen that appears after step 1 of "Setting Procedure" is performed will appear.)

4 Displays the Help list.

5 Closes the Help screen and returns to the original screen.

6 Scrolls up and down when the help text cannot be displayed in its entirety on a single screen.

Accessibility Functions (Magnifying the View)

You can magnify the text and keys displayed on the touch panel. You can also select items and move to the next screen using the numeric keys.

NOTE

- This function can be used on the Home screen and on the functions that were registered via Copy/Send Quick Setup.
- To configure any functions that are not displayed on the Accessibility screen, you need to return to the original view. Select the [**Accessibility Display**] key again.

While using the Copy or Send functions, select the [**Accessibility Display**] key.

Large keys and text appear on the touch panel.

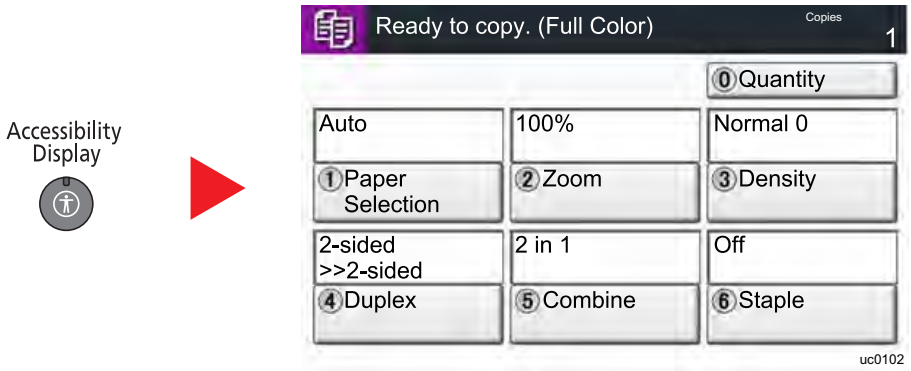

You can also control the screen using the numeric key corresponding to the number in circle. (Example: Press the [2] key on the numeric key pad to zoom.)

Control the functions according to the display on the screen.

Login/Logout

If you are setting a function that requires administrator rights, or if user login administration is enabled, you must enter your login user name and login password.

NOTE

The factory default login user name and login password are set as shown below.

Model Name	Login User Name	Login Password
2552ci	2500	2500
3252ci	3200	3200
3552ci	3500	3500
4052ci	4000	4000
5052ci	5000	5000
6052ci	6000	6000

You will be unable to login if you forget your login user name or login password. In this event, login with administrator privileges and change your login user name or login password.

Login

Normal login

1 Enter the login user name and login password to login.

1 If this screen is displayed during operations, select [**Login User Name**] to enter the login user name.

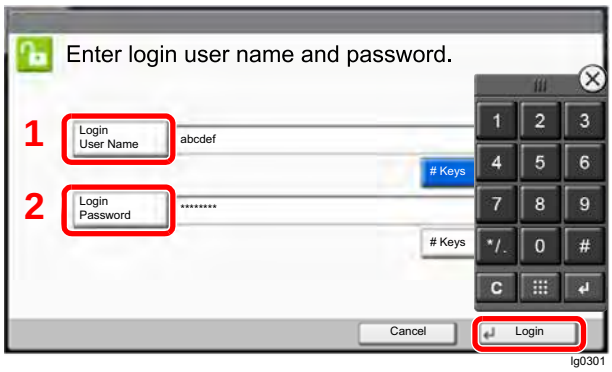

Character Entry Method (page 11-10)

2 [**Login Password**] > Enter the login password > [**OK**]

NOTE

- [**# Keys**] can be selected to enter the number with the numeric keys on the operation panel.
- If [**Network Authentication**] is selected as the user authentication method, authentication destinations are displayed and either [**Local**] or [**Network**] can be selected as the authentication destination.
- To authenticate by ID card, select [**ID Card Login**].

2 Select [Login].

Simple Login

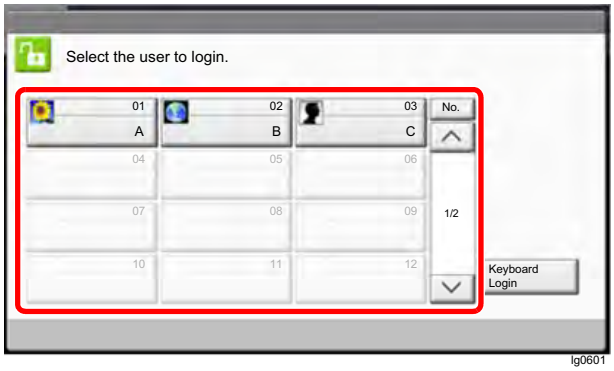

If this screen is displayed during operations, select a user and log in.

NOTE

If a user password is required, an input screen will be displayed.

Simple Login Settings (page 9-28)

Logout

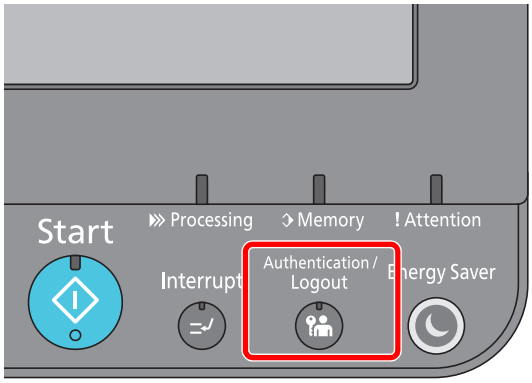

To logout from the machine, select the [**Authentication/Logout**] key to return to the login user name/login password entry screen.

Users are automatically logged out in the following circumstances:

- When the machine enters the sleep state.
- When the auto panel reset function is activated.

Default Settings of the Machine

The default settings of the machine can be changed in System Menu. Before using this machine, configure such settings as date and time, network configuration, and energy saving functions as needed.

NOTE

For settings that are configurable from System Menu, refer to the following:

Setup and Registration (System Menu) (page 8-1)

Setting Date and Time

Follow the steps below to set the local date and time at the place of installation.

When you send an E-mail using the transmission function, the date and time as set here will be printed in the header of the E-mail message. Set the date, time and time difference from GMT of the region where the machine is used.

NOTE

- To make changes after this initial configuration, refer to the following:

  Date/Timer/Energy Saver (page 8-68)

- The correct time can be periodically set by obtaining the time from the network time server.

  Command Center RX User Guide

1 Display the screen.

[**System Menu/Counter**] key > [**Date/Timer/Energy Saver**]

2 Configure the settings.

[**Time Zone**] > [**Date/Time**] > [**Date Format**]

Item	Description
Time Zone	Set the time difference from GMT. Choose the nearest listed location from the list. If you select a region that utilizes summer time, configure settings for summer time.
Date/Time	Set the date and time for the location where you use the machine. If you perform Send as E-mail, the date and time set here will be displayed on the header. **Value: Year (2000 to 2037), Month (1 to 12), Day (1 to 31), Hour (00 to 23), Minute (00 to 59), Second (00 to 59)**
Date Format	Select the display format of year, month, and date. The year is displayed in Western notation. **Value: Month/Day/Year, Day/Month/Year, Year/Month/Day**

Network Setup

Configuring the Wired Network

The machine is equipped with network interface, which is compatible with network protocols such as TCP/IP (IPv4), TCP/IP (IPv6), NetBEUI, and IPSec. It enables network printing on the Windows, Macintosh, UNIX and other platforms.

Set up TCP/IP (IPv4) to connect to the Windows network.

Be sure to connect the network cable before configuring the settings.

Connecting LAN Cable (page 2-7)

For other network settings, refer to the following:

Network (page 8-48)

NOTE

If user login administration is enabled, you can only change the settings by logging in with administrator privileges. If user login administration is disabled, the user authentication screen appears. Enter a login user name and password, and select [**Login**].

The factory default login user name and login password are set as shown below.

Model Name	Login User Name	Login Password
2552ci	2500	2500
3252ci	3200	3200
3552ci	3500	3500
4052ci	4000	4000
5052ci	5000	5000
6052ci	6000	6000

IPv4 setting

1 Display the screen.

[**System Menu/Counter**] key > [**System/Network**] > "Network" [**Next**] > "Wired Network Settings" [**Next**] > "TCP/IP Setting" [**Next**] > "IPv4" [**Change**]

2 Configure the settings.

When using DHCP server

[**DHCP**]: Set to [**On**].

When setting the static IP address

[**DHCP**]: Set to [**Off**].

[**IP Address**]: Enter the address.

[**Subnet Mask**]: Enter the subnet mask in decimal representation (0 to 255).

[**Default Gateway**]: Enter the address.

When using the Auto-IP, enter "0.0.0.0" in [**IP Address**].

IMPORTANT

After changing the setting, restart the network from System Menu, or turn the machine OFF and then ON.

Restart Network (page 8-59)

NOTE

Ask your network administrator for the IP address in advance, and have it ready when you configure this setting.
In the following cases, set the IP address of DNS server on the Command Center RX.

- When using the host name with "DHCP" setting set to "Off"
- When using the DNS server with IP address that is not assigned by DHCP automatically.

Setting the IP Address of the DNS Server, refer to the following:

Command Center RX User Guide

Configuring the Wireless Network

When the wireless network function is available or the Wireless Network Interface Kit (IB-51) is installed on the machine and the connection settings are configured, it is possible to print or send in a wireless network (wireless LAN) environment. The configuration methods are as follows:

Configuration Method	Description	Reference Page
Configuring the Connection from the Operation Panel on This Machine	Use Quick Setup Wizard when configuring the network in a wizard-style screen, without setting indivisually in System menu.	Quick Setup Wizard (page 2-42)
	Use Wi-Fi Settings or Wireless Network to configure the network in details from System menu.	Wi-Fi Settings (page 8-51) Wireless Network (page 8-61)
Setting the Connection by Using the Wi-Fi Setup Tool	This is the tool included in the Product Library. You can configure the connection according to the instructions provided by the wizard.	Setting the Connection by Using the Wi-Fi Setup Tool (page 2-32)
Setting the Connection by Using the Setup Utility of IB-51	This is the setup tool included in the CD of IB-51. You can use it on both Windows and Mac OS.	**IB-51 Operation Guide**
Configuring Connections on the Web Page	The connection can be set from the Command Center RX.	**Command Center RX User Guide**
	For the IB-51, the connection can be set on the dedicated Web page.	**IB-51 Operation Guide**

NOTE

When you want to switch to the network interface other than Wired (default), select the desired setting on "Primary Network (Client)".

Primary Network (Client) (page 8-62)

Setting the Connection by Using the Wi-Fi Setup Tool

To send the Wi-Fi settings configured in the Wi-Fi Setup Tool to the machine, connect the computer or handheld device with the machine locally. The connection methods are wired connection via LAN cable and wireless LAN connection (Wi-Fi Direct).

NOTE

- Before using the Wi-Fi Setup Tool, connect your computer to this machine locally with wired LAN cable or Wi-Fi Direct.
- To use Wi-Fi Direct, confirm that the Wi-Fi Direct is enabled (Wi-Fi Direct is set to [**ON**]) and Restart Network from the operation panel, before your computer will be connected to this machine with Wi-Fi Direct.
- To use a wired LAN cable directly connected to the machine, the Auto-IP (Link-local) address will be assigned to the machine and the computer. This machine applies Auto-IP as the default settings.
- Configure the settings on the operation panel if your computer supports WPS.

Wi-Fi Settings (page 8-51)
Wireless Network (page 8-61)

Wired Connection by Using LAN Cable

1 Connect the machine with a computer

1 Connect the machine with a computer via LAN cable when the machine is powered on.

2 Turn on the computer.

IP address (link local address) of the machine and computer is generated automatically.

2 Insert the DVD.

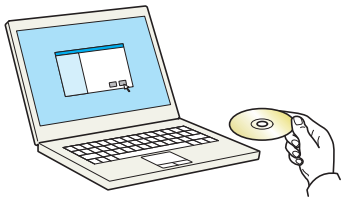

NOTE

- Installation on Windows must be done by a user logged on with administrator privileges.
- If the "**Welcome to the Found New Hardware Wizard**" dialog box displays, select [**Cancel**].
- If the autorun screen is displayed, click [**Run setup.exe**].
- If the user account management window appears, click [**Yes**] ([**Allow**]).

3 Display the screen.

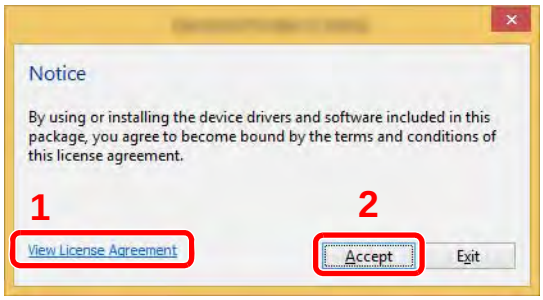

1 Click [**View License Agreement**] and read the License Agreement.

2 Click [**Accept**].

4 Select [Maintenance].

5 [Wi-Fi Setup Tool] > [OK]

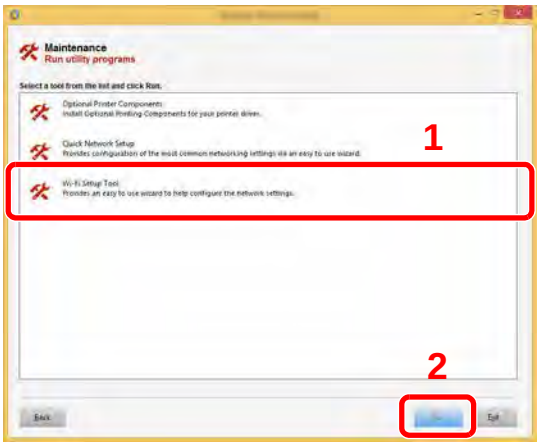

6 Configure the settings.

1 [**Do not use automatic configuration**] > [**Next**] > [**Next**]

2 [**Use LAN cable**] > [**Next**] > [**Next**]

3 [**Easy setup**] > [**Next**]

The machine is detected.

NOTE

- Only one machine can be searched using Wi-Fi Setup Tool. It may take times to search the machine.
- If the machine is not detected, select [**Advanced setup**] > [**Next**]. Select [**Express**] or [**Custom**] as device discovery method and specify the IP address or host name to search the machine.

4 Select the machine > [**Next**]

5 Select [**Use the device settings.**] on [**Authentication mode**], and enter the login user name and password. Login user name and Password are both Admin.

6 Configure the communication settings > [**Next**]

7 Change the settings of access point as necessary > [**Next**]

The network is configured.

Wireless LAN Connection by Using Wi-Fi Direct

1 Display the screen.

[**System Menu/Counter**] key > [**System/Network**] > "Network" [**Next**] > "Wi-Fi Direct Settings" [**Next**] > "Wi-Fi Direct" [**Change**]

2 Configure the settings.

[**On**] > [**OK**]

3 Restart the network.

[**System Menu/Counter**] key > [**System/Network**] > "Network" [**Next**] > "Restart Network" [**Start**] > [**Yes**]

4 Connect a computer or a handheld device with the machine.

Setting Wi-Fi Direct (page 2-36)

5 Insert the DVD.

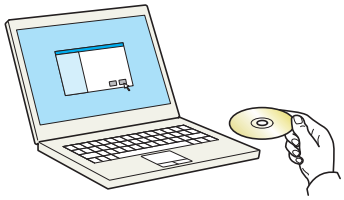

NOTE

- Installation on Windows must be done by a user logged on with administrator privileges.
- If the "**Welcome to the Found New Hardware Wizard**" dialog box displays, select [**Cancel**].
- If the autorun screen is displayed, click [**Run setup.exe**].
- If the user account management window appears, click [**Yes**] ([**Allow**]).

6 Display the screen.

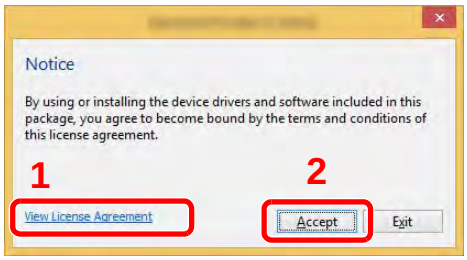

1 Click [**View License Agreement**] and read the License Agreement.

2 Click [**Accept**].

7 Select [Maintenance].

8 [Wi-Fi Setup Tool] > [OK]

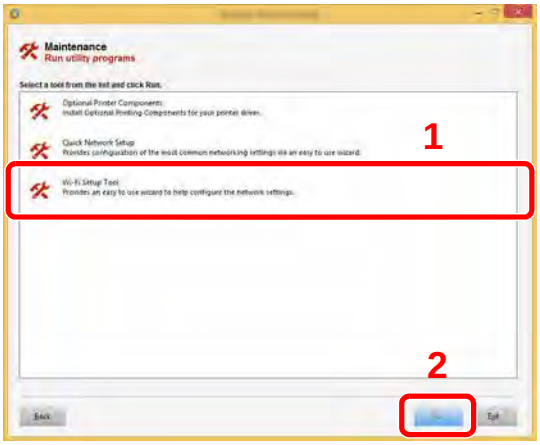

9 Configure the settings.

1 [**Do not use automatic configuration**] > [**Next**] > [**Next**]

2 [**Wi-Fi Direct**] > [**Next**] > [**Next**]

3 [**Advanced setup**] > [**Next**]

Select [**Express**] or [**Custom**] as device discovery method and specify the IP address or host name to search the machine.

4 Select the machine > [**Next**]

5 Select [**Use the device settings.**] on [**Authentication mode**], and enter the login user name and password. Login user name and Password are both Admin.

6 Configure the communication settings > [**Next**]

7 Change the settings of access point as necessary > [**Next**]

The network is configured.

Setting Wi-Fi Direct

Setting Wi-Fi Direct enables you to print from the Wi-Fi Direct environment. The configuration methods are as follows:

Configuring the Connection from the Operation Panel on This Machine

Connecting to Computers or Handheld Devices that Support Wi-Fi Direct

1 Display the screen.

[**System Menu/Counter**] key > [**System/Network**] > "Network" [**Next**] > "Wi-Fi Direct Settings" [**Next**] > "Wi-Fi Direct" [**Change**]

2 Configure the settings.

[**On**] > [**OK**]

3 Restart the network.

[**System Menu/Counter**] key > [**System/Network**] > "Network" [**Next**] > "Restart Network" [**Start**] > [**Yes**]

4 Specify the machine name from the computer or handheld device.

If a confirmation message appears on the operation panel of the machine, select [**Yes**].

The network between this machine and the handheld device is configured.

Connecting to Computers or Handheld Devices Unsupported Wi-Fi Direct

Here, we'll explain the procedures for connecting to iOS handheld devices.

1 Display the screen.

[**System Menu/Counter**] key > [**System/Network**] > "Network" [**Next**] > "Wi-Fi Direct Settings" [**Next**] > "Wi-Fi Direct" [**Change**]

2 Configure the settings.

[**On**] > [**OK**]

3 Restart the network.

[**System Menu/Counter**] key > [**System/Network**] > "Network" [**Next**] > "Restart Network" [**Start**] > [**Yes**]

4 [Home] key > [Wi-Fi Direct]

5 Note the network name (SSID), IP address, and password.

6 Configure the handheld device.

1. [**Settings**] > [**Wi-Fi**]
2. Select the network name (SSID) appeared in step 5 from the list.

3 Enter the password that was provided in step 5 > [**Connect**]

The network between this machine and the handheld device is configured.

Configuring the Connection by Using Push Button

When your computer or handheld device does not support Wi-Fi Direct but supports WPS, you can configure the network using push button.

1 Display the screen.

[**System Menu/Counter**] key > [**System/Network**] > "Network" [**Next**] > "Wi-Fi Direct Settings" [**Next**] > "Wi-Fi Direct" [**Change**]

2 Configure the settings.

[**On**] > [**OK**]

3 Restart the network.

[**System Menu/Counter**] key > [**System/Network**] > "Network" [**Next**] > "Restart Network" [**Start**] > [**Yes**]

4 [Home] key > [Wi-Fi Direct]

5 Press the push button on the computer or handheld device and select [Push Button] on the screen of operation panel simultaneously.

The network between this machine and the computer or handheld device is configured.

IMPORTANT

You can connect up to three handheld devices at the same time using Wi-Fi Direct setting. When the devices that support Wi-Fi Direct are connected, if you want to connect other device, disconnect the already-connected devices from the network. The disconnection methods are as follows:

- **Disconnect the network from the computer or handheld computer**
- **Disconnecting all devices from the network on the operation panel**

  Select [Home] > [Wi-Fi Direct] > [Connected Device List] > [Disconnect All]
- **Configuring auto disconnecting time from the System menu**

  Wi-Fi Direct Settings (page 8-51)
- **Configuring auto disconnecting time from the Command Center RX**

  Command Center RX User Guide

Configuring NFC

NFC (Near Field Communication) is the internal standard for near field communication in which the data communication distance is limited to approximately 10 cm. Establishing data communication simply requires you to show the handheld device supporting NFC to this machine.

The configuration methods are as follows:

Configuring Connections on the Web Page

You can set NFC from the Command Center RX.

Command Center RX User Guide

Configuring the Connection from the Operation Panel on This Machine

Configure the NFC from the System Menu.

NFC (page 8-66)

This section presents an example for configuring the NFC from the System Menu.

1 Display the screen.

[**System Menu/Counter**] key > [**System/Network**] > "NFC" [**Change**]

2 Configure the settings.

[**On**] > [**OK**]

Energy Saver Function

If a certain period of time elapses after the machine is last used, the machine automatically enters Low Power Mode to reduce power consumption. If a further period of time elapses without the machine being used, the machine automatically enters Sleep Mode, which minimizes power consumption.

Low Power Mode

If the machine is not operated for a certain period of time, the energy saver indicator will light up and the screen will become dark to reduce power consumption. This status is referred to as Low Power Mode.

"Low power." will be displayed on the screen.

The amount of time before entering Low Power Mode: 3 minutes (default setting).

If print data is received during Low Power Mode, the machine automatically wakes up and starts printing. Also when fax data arrives while the machine is in Low Power Mode, the machine automatically wakes up and starts printing.

To resume, perform one of the following actions.

- Select any key on the operation panel.
- Touch the touch panel.
- Open the optional original cover or the optional document processor.
- Place originals in the optional document processor.

Recovery time from Low Power Mode is as follows.

- 2552ci/3252ci: Within 10 seconds
- 3552ci/4052ci/5052ci/6052ci: Within 15 seconds

Note that ambient environmental conditions, such as ventilation, may cause the machine to respond more slowly.

NOTE

If the Low Power Timer is equal to the Sleep Timer, a Sleep mode is preceded.

Sleep

To enter Sleep, select the [**Energy Saver**] key. Touch panel and all indicators on the operation panel will go out to save a maximum amount of power except the Energy Saver indicator. This status is referred to as Sleep.

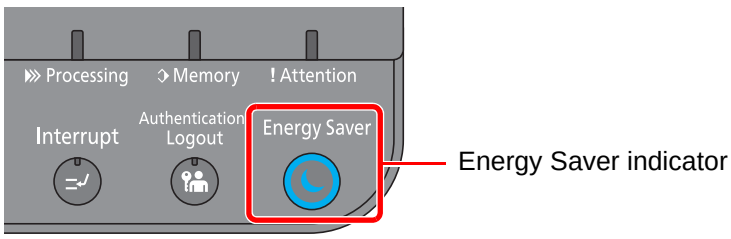

If print data is received during Sleep, the machine automatically wakes up and starts printing.

Also when fax data arrives while the machine is in Sleep, the machine automatically wakes up and starts printing.

To resume, perform the following actions.

- Select any key on the operation panel.
- Touch the touch panel.
- Place originals in the optional document processor.

Recovery time from Sleep Mode is as follows.

- 2552ci/3252ci: Within 16 seconds
- 3552ci/4052ci/5052ci/6052ci: Within 17 seconds

Note that ambient environmental conditions, such as ventilation, may cause the machine to respond more slowly.

Auto Sleep

Auto Sleep automatically switches the machine into Sleep if left idle for a preset time.

The amount of time before entering Sleep is as follows.

- 10 minutes (default setting).

To change the preset sleep time, refer to the following:

Quick Setup Wizard (page 2-42)

NOTE

If the Low Power Timer is equal to the Sleep Timer, a Sleep Mode is preceded.

Sleep Rules (models for Europe)

You can set whether Sleep Mode operates for each function. When the machine enters Sleep Mode, the ID card cannot be recognized.

For more information on Sleep Rules settings, refer to the following:

Sleep Rules (models for Europe) (page 8-70)

Sleep Level (Energy Saver) (models except for Europe)

This mode reduces power consumption even more than normal Sleep Mode, and allows Sleep Mode to be set separately for each function. Printing from a computer connected with a USB cable is not available while the machine is asleep. The time required for the machine to wake up from power save mode and resume normal operation will be longer than for normal Sleep Mode.

NOTE

If the optional Network Interface Kit is installed, Energy Saver cannot be specified.

For more information on Sleep Level (Energy Saver) Mode settings, refer to the following:

Quick Setup Wizard (page 2-42)

Energy Saver Recovery Level

This machine can reduce power consumption when recovering from Energy Saver Mode.

For EnergySaver RecoveryLevel, "Full Recovery", "Normal Recovery" or "Power Saving Recovery" can be selected.

The factory default is "Normal Recovery".

For more information on Energy Saver Mode settings, refer to the following:

Quick Setup Wizard (page 2-42)

EnergySaver RecoveryLevel (page 8-70)

Weekly Timer Settings

Set the machine to automatically turn OFF and wake up at times specified for each day.

For more information on Weekly Timer Settings, refer to the following:

Quick Setup Wizard (page 2-42)

Power Off Timer (models for Europe)

If the machine is not used while in sleep mode, the power automatically turns off. The Power Off Timer is used to set the time until the power turns off.

The factory setting for the time until the power turns off: 3 days

Power Off Timer (models for Europe) (page 8-71)

Quick Setup Wizard

For FAX functions, paper settings, Energy Saver functions and network settings, the following settings can be configured in a wizard-style screen.

FAX Setup		Configures basic fax settings. This function is displayed when the optional FAX Kit is installed. ➡ **FAX Operation Guide**	
		1. Dialing/RX Mode	Dialing Mode (Port 1, Port 2[*1])[*2] Reception Mode Auto (DRD)[*3]
		2. Local FAX Information	Local FAX Name (Port 1, Port 2[*1]) Local FAX Number (Port 1, Port 2[*1]) Local FAX ID TTI
		3. Sound	FAX Speaker Volume FAX Monitor Volume Job Finish Buzzer
		4. Rings	Rings (Normal)[*4] Rings (TAD)[*4] Rings (FAX/TEL)[*4]
		5. Output	Media Type Paper Output (Port 1, Port 2[*1])[*5] Reduced RX Size
		6. Redial	Retry Times
	Power Off Setup	Show Power Off Message	—
Energy Saver Setup		Configures sleep mode and low power mode.	
		1. Sleep Mode	For Europe Sleep Timer Sleep Rules Except for Europe Sleep Timer Sleep Level
		2. Low Power Mode	Low Power Timer
		3.Recovery Mode	Energy Saver Recovery Level
		4.Weekly Timer Settings	Weekly Timer Schedule[*6] Retry Times[*6] Retry Interval[*6]

Network Setup	Configures network settings.	
	1. Network	Network Selection Wi-Fi*7 DHCP*8 IP Address*9 Subnet Mask*9 Default Gateway*9

*1 This is displayed when the option of two FAX Kits has been installed.
*2 Inch version only.
*3 DRD reception mode is available for some countries.
*4 This setting does not appear in some regions.
*5 This function is displayed when the optional Job Separator (except 2552ci), Mailbox or 4,000-Sheet Finisher is installed. When an Inner Finisher or a 1,000-Sheet Finisher is installed with the machine, this function is not displayed.
*6 This function is displayed when [**Weekly Timer**] is set to [**On**].
*7 This function is displayed when [**Network Selection**] is set to [**Wi-Fi**].
*8 This function is displayed when [**Network Selection**] is set to [**Wired Network**].
*9 This function is displayed when [**DHCP**] is set to [**Off**].

NOTE

If the user authentication screen appears, enter your login user name and login password and select [**Login**].

The factory default login user name and login password are set as shown below.

Model Name	Login User Name	Login Password
2552ci	2500	2500
3252ci	3200	3200
3552ci	3500	3500
4052ci	4000	4000
5052ci	5000	5000
6052ci	6000	6000

1 Display the screen.

[**System Menu/Counter**] key > [**Quick Setup Wizard**]

2 Select a function.

3 Configure the settings.

Start the wizard. Follow the instructions on the screen to configure settings.

NOTE

If you experience difficulty configuring the settings, refer to the following:

Help Screen (page 2-25)

Control	Description
End	Exits the wizard. Settings configured so far are applied.
Previous	Returns to the previous item.
Skip	Advances to the next item without setting the current item.
Next	Advances to the next screen.
Back	Returns to the previous screen.
Complete	Register the settings and exit the wizard.

Installing Software

Install appropriate software on your PC from the included DVD (Product Library) if you want to use the printer function of this machine or perform TWAIN / WIA transmission or Network FAX transmission from your PC.

Software on DVD (Windows)

You can use either [**Express Install**] or [**Custom Install**] can be selected for the installation method. [**Express Install**] is the standard installation method. To install components that cannot be installed by [**Express Install**], use [**Custom Install**].

For details on Custom Installation, refer to the following:

Custom Install (page 2-48)

Software	Description	Express Install
KX DRIVER	This driver enables files on a computer to be printed by the machine. Multiple page description languages (PCL XL, KPDL, etc.) are supported by a single driver. This printer driver allows you to take full advantage of the features of the machine. Use this driver to create PDF files.	○
KX XPS DRIVER	This printer driver supports the XPS (XML Paper Specification) format developed by Microsoft Corporation.	—
KPDL mini-driver/PCL mini-driver	This is a Microsoft MiniDriver that supports PCL and KPDL. There are some restrictions on the machine features and option features that can be used with this driver.	—
FAX Driver	This makes it possible to send a document created in a computer software application as a fax via the machine.	—
Kyocera TWAIN Driver	This driver enables scanning on the machine using a TWAIN-compliant software application.	○
Kyocera WIA Driver	WIA (Windows Imaging Acquisition) is a function of Windows that enables reciprocal communication between an imaging device such as a scanner and an image processing software application. An image can be acquired using a WIA-compliant software application, which is convenient when a TWAIN-compliant software application is not installed in the computer.	—
KYOCERA Net Viewer	This is a utility that enables monitoring of the machine on the network.	—
Status Monitor	This is a utility that monitors the printer status and provides an ongoing reporting function.	○
File Management Utility	This makes it possible to send and save a scanned document to a specified network folder.	—
KYOCERA Net Direct Print	This makes it possible to print a PDF file without starting Adobe Acrobat/Reader.	—
FONTS	These are display fonts that enable the machine's built-in fonts to be used in a software application.	○

NOTE
- Installation on Windows must be done by a user logged on with administrator privileges.
- The optional FAX Kit is required in order to make use of fax functionality.
- WIA Driver and KX XPS DRIVER cannot be installed on Windows XP.

Installing Software in Windows

Express Install

The following procedure is an example for installing the software in Windows 8.1 using [**Express Install**].

For details on Custom Installation, refer to the following:

Custom Install (page 2-48)

1 Insert the DVD.

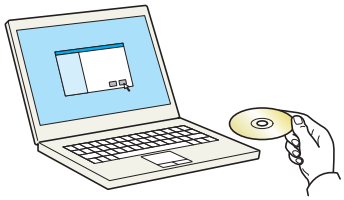

NOTE
- Installation on Windows must be done by a user logged on with administrator privileges.
- If the "**Welcome to the Found New Hardware Wizard**" dialog box displays, select [**Cancel**].
- If the autorun screen is displayed, click [**Run setup.exe**].
- If the user account management window appears, click [**Yes**] ([**Allow**]).

2 Display the screen.

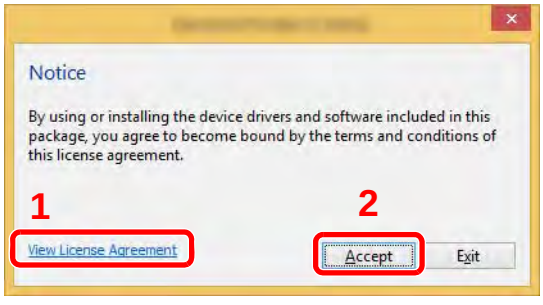

1 Click [**View License Agreement**] and read the License Agreement.

2 Click [**Accept**].

3 Select [Express Install].

4 Install the software.

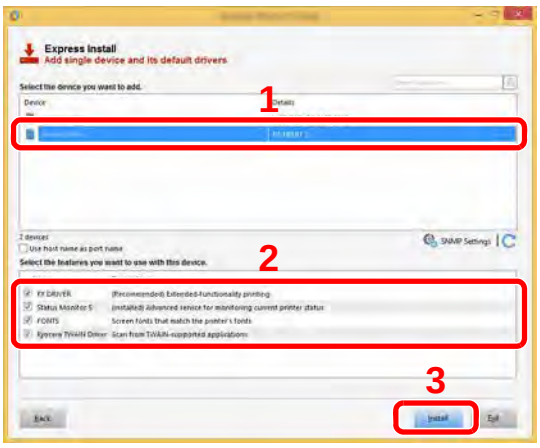

You can also select [**Use host name for port name**] and set to use the host name of the standard TCP/IP port. (A USB connection cannot be used.)

IMPORTANT

If Wi-Fi or Wi-Fi Direct is enabled, be sure to specify the IP address for the port name. Installation may fail if the host name is specified.

NOTE

- The machine cannot be detected unless it is on. If the computer fails to detect the machine, verify that it is connected to the computer via a network or USB cable and that it is turned on and click (Reload).
- If the Windows security window appears, click [**Install this driver software anyway**].
- To install Status Monitor on Windows versions preceding Windows 8, it is necessary to install Microsoft .NET Framework 4.0 beforehand.

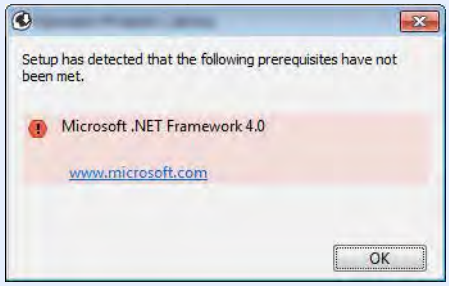

5 Finish the installation.

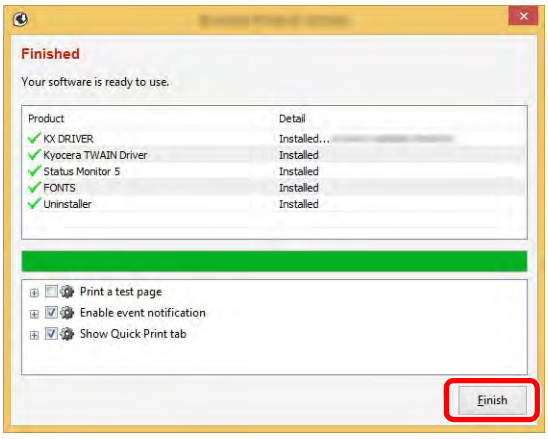

When "**Your software is ready to use**" appears, you can use the software. To print a test page, click the "**Print a test page**" checkbox and select the machine.

Click [**Finish**] to exit the wizard.

NOTE

When you have selected [**Device settings**] in Windows XP, the dialog box for device setting will appear after [**Finish**] is clicked. Configure the settings for options installed on the machine. Device settings can be configured after the installation is completed.

Printer Driver User Guide

If a system restart message appears, restart the computer by following the screen prompts. This completes the printer driver installation procedure.

If you are installing the TWAIN driver, continue by configuring the following:

Setting TWAIN Driver (page 2-55)

Custom Install

The following procedure is an example for installing the software in Windows 8.1 using [**Custom Install**].

1 Insert the DVD.

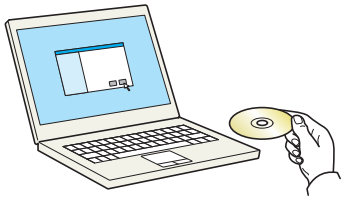

NOTE

- Installation on Windows must be done by a user logged on with administrator privileges.
- If the "**Welcome to the Found New Hardware Wizard**" dialog box displays, select [**Cancel**].
- If the autorun screen is displayed, click [**Run setup.exe**].
- If the user account management window appears, click [**Yes**] ([**Allow**]).

2 Display the screen.

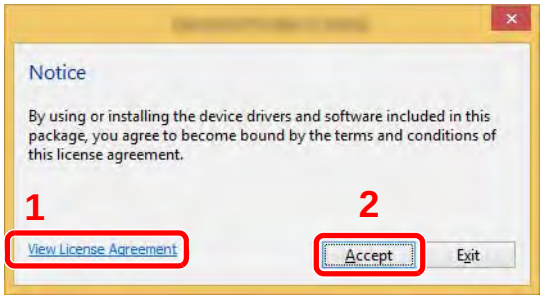

1 Click [**View License Agreement**] and read the License Agreement.

2 Click [**Accept**].

3 Select [Custom Install].

4 Install the software.

1 Select the device to be installed.

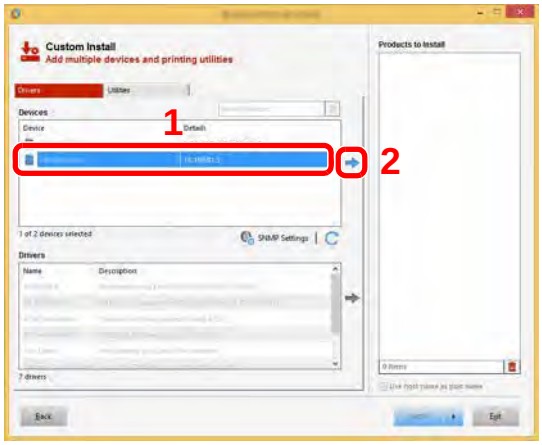

IMPORTANT

If Wi-Fi or Wi-Fi Direct is enabled, be sure to specify the IP address for the port name. Installation may fail if the host name is specified.

NOTE

- The machine cannot be detected unless it is on. If the computer fails to detect the machine, verify that it is connected to the computer via a network or USB cable and that it is turned on and click (Reload).
- If the desired device does not appear, select [**Add custom device**] to directly select the device.

2 Select the driver to be installed.

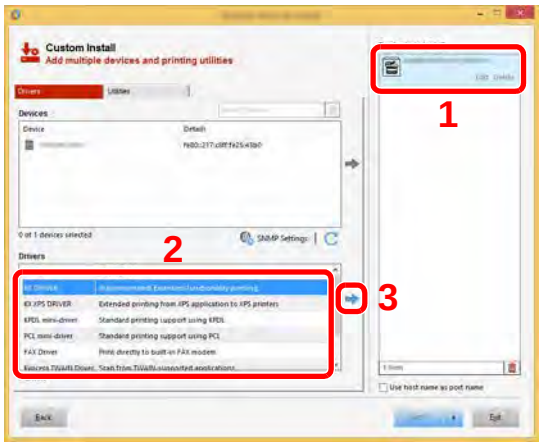

3 Click [**Utility**] tab and select the utility to be installed.

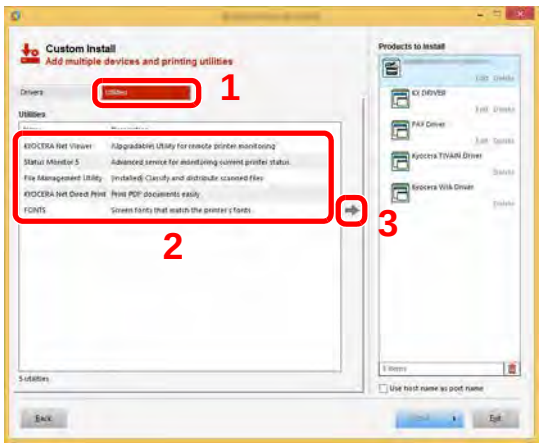

4 Click [**Install**].

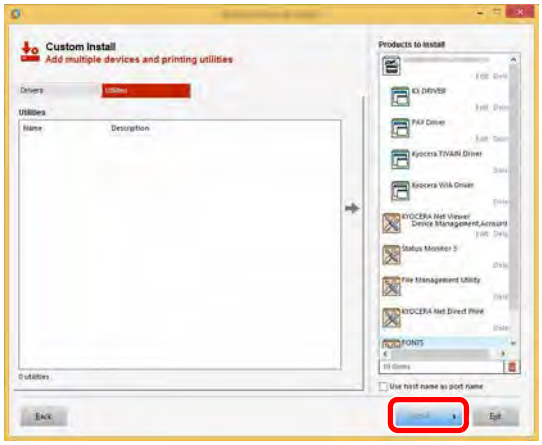

NOTE

To install Status Monitor on Windows versions preceding Windows 8, it is necessary to install Microsoft .NET Framework 4.0 beforehand.

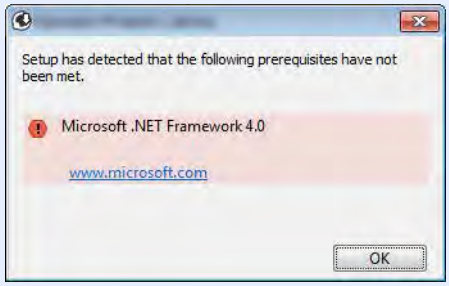

5 Finish the installation.

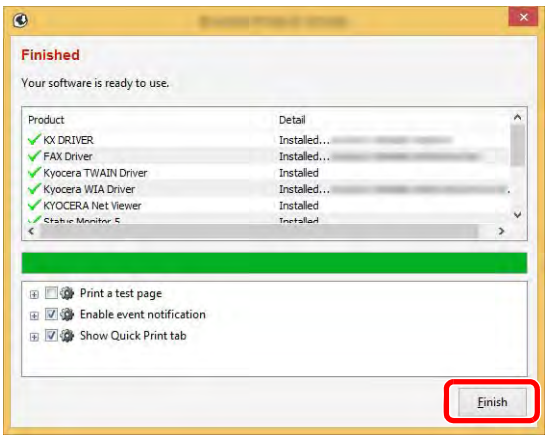

When "**Your software is ready to use**" appears, you can use the software. To print a test page, click the "**Print a test page**" checkbox and select the machine.

Click [**Finish**] to exit the wizard.

NOTE

When you have selected [**Device settings**] in Windows XP, the dialog box for device setting will appear after [**Finish**] is clicked. Configure the settings for options installed on the machine. Device settings can be configured after the installation is completed.

Printer Driver User Guide

If a system restart message appears, restart the computer by following the screen prompts. This completes the printer driver installation procedure.

If you are installing the TWAIN driver, continue by configuring the following:

Setting TWAIN Driver (page 2-55)

Uninstalling the Software

Perform the following procedure to delete the Software from your computer.

NOTE

Uninstallation on Windows must be done by a user logged on with administrator privileges.

1 Display the screen.

Click [**Search**] in charms, and enter "Uninstall Kyocera Product Library" in the search box. Select [**Uninstall Kyocera Product Library**] in the search list.

NOTE

In Windows 7, click [**Start**] button on the Windows and then select [**All Programs**], [**Kyocera**], and [**Uninstall Kyocera Product Library**] to display the Uninstall Wizard.

2 Uninstall the software.

Place a check in the check box of the software to be deleted.

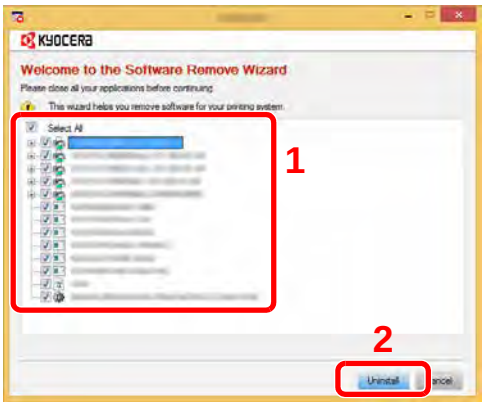

3 Finish uninstalling.

If a system restart message appears, restart the computer by following the screen prompts. This completes the software uninstallation procedure.

NOTE

- The software can also be uninstalled using the Product Library.
- In the Product Library screen, click [**Uninstall**], and follow the on-screen instructions to uninstall the software.

Installing Software in Mac Computer

The machine's printer functionality can be used by a Mac computer.

NOTE

- Installation on Mac OS must be done by a user logged on with administrator privileges.
- When printing from a Macintosh computer, set the machine's emulation to [**KPDL**] or [**KPDL(Auto)**].
  Printer (page 8-40)
- If connecting by Bonjour, enable Bonjour in the machine's network settings.
  Bonjour (page 8-55)
- In the Authenticate screen, enter the name and password used to log in to the operating system.
- When printing via AirPrint, you do not have to install the software.

1 Insert the DVD.

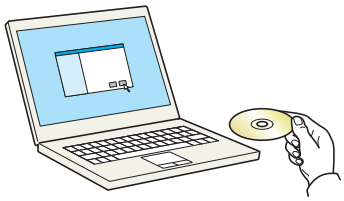

Double-click the [**Kyocera**] icon.

2 Display the screen.

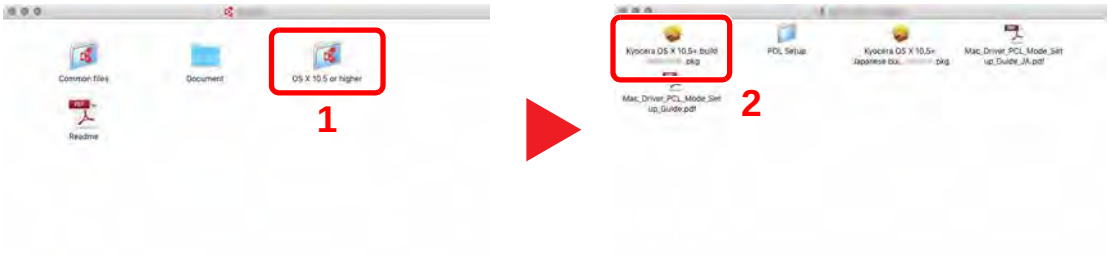

Double-click [**Kyocera OS X x.x**] depending on your Mac OS version.

3 Install the Printer Driver.

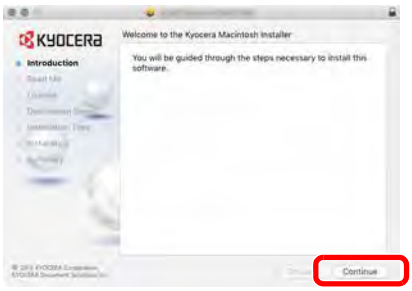

Install the printer driver as directed by the instructions in the installation software.

This completes the printer driver installation.

If a USB connection is used, the machine is automatically recognized and connected.
If an IP connection is used, the settings below are required.

4 Configure the printer.

1 Open System Preferences and add the printer.

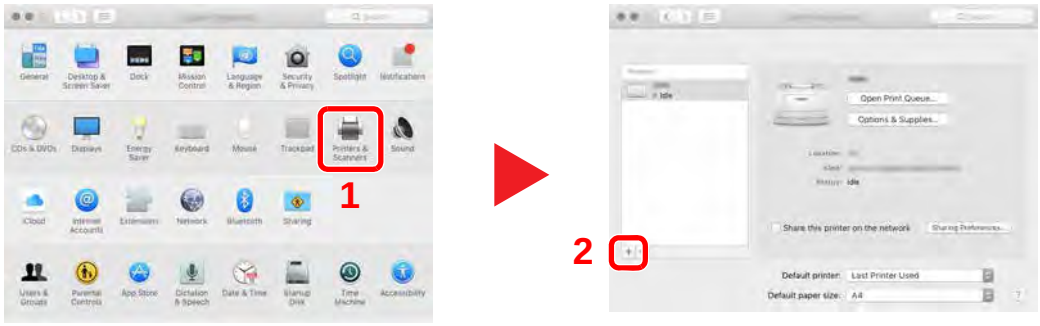

2 Select [**Default**] and then select the driver after clicking on the item that appears in "Name".

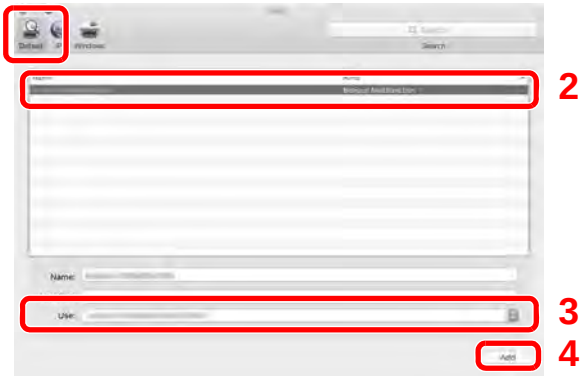

NOTE

When using an IP connection, click the IP icon for an IP connection and then enter the host name or IP address. The number entered in "Address" will automatically appear in "Name". Change if needed.

3 Select the options available for the machine.

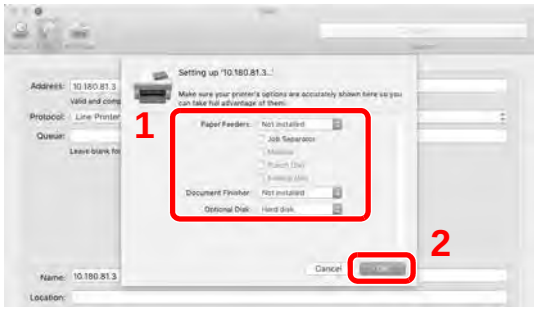

4 The selected machine is added.



Setting TWAIN Driver

Register this machine to the TWAIN Driver. Instructions are based on interface elements as they appear in Windows 8.1.

1 Display the screen.

1 Click [**Search**] in charms, and enter "TWAIN Driver Setting" in the search box. Select [**TWAIN Driver Setting**] in the search list.

NOTE

In Windows 7, select [**Start**] button on the Windows, [**All Programs**], [**Kyocera**] and then [**TWAIN Driver Setting**]. TWAIN Driver screen appears.

2 Click [**Add**].

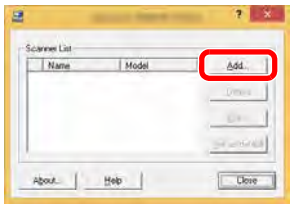

2 Configure TWAIN Driver.

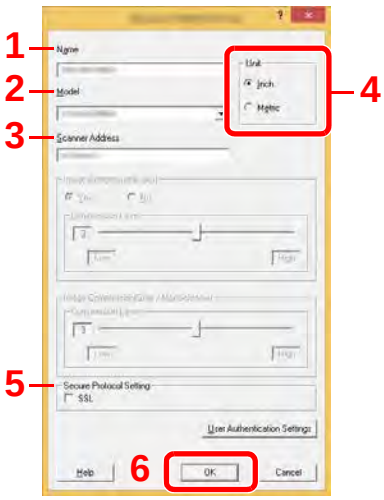

1 Enter the machine name.

2 Select this machine from the list.

3 Enter the machine's IP address or host name.

4 Set units of measurement.

5 When using SSL, select the checkbox beside SSL.

6 Click [**OK**].

NOTE

When the machine's IP address or host name is unknown, contact Administrator.

3 Finish registering.

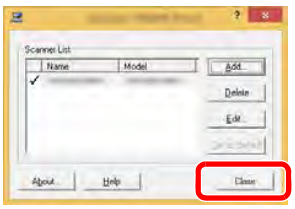

NOTE

Click [**Delete**] to delete the added machine. Click [**Edit**] to change names.

Setting WIA Driver

Register this machine to the WIA Driver. Instructions are based on interface elements as they appear in Windows 8.1.

1 Display the screen.

1 Click [**Search**] in charms, and enter "View scanners and cameras" in the search box. Select [**View scanners and cameras**] in the search list then the Scanners and Cameras screen appears.

> **NOTE**
>
> In Windows 7, click [**Start**] button on the Windows and enter [**Scanner**] in [**Program and File Search**]. Click [**View scanners and cameras**] in the search list then the Scanners and Cameras screen appears.

2 Select the same name as this machine from WIA Drivers, and click [**Properties**].

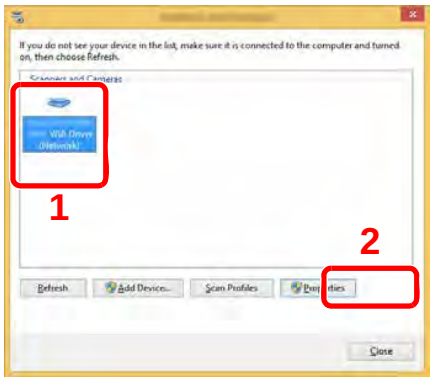

2 Configure WIA Driver.

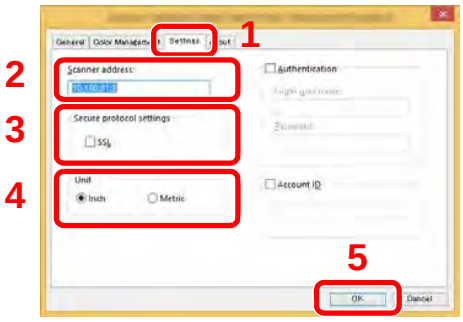

1 Click the [**Settings**] tab.

2 Enter the machine IP addresses or host name.

3 When using SSL, select the checkbox beside SSL.

4 Set units of measurement.

5 Click [**OK**].

Checking the Counter

Check the number of sheets printed and scanned.

1 Display the screen.

[**System Menu/Counter**] key > [**Counter**]

2 Check the counter.

Additional Preparations for the Administrator

In addition to the information provided in this chapter, the administrator of this machine should check the following, and configure the settings as needed.

Sending Documents to a PC

To Send to a Shared Folder (Send to Folder (SMB))

To send a document that has been loaded, you need to create a shared folder to receive the document on your computer.

Preparation for Sending a Document to a Shared Folder in a PC (page 3-20)

To E-mail Scanned Images (Send as E-mail)

You can send a scanned original image as an E-mail attachment.

E-mail Settings (page 2-65)

Strengthening the Security

This machine is shipped with two default users registered one with Machine Administrator rights, and another with Administrator rights.Logging in as this user will allow you to configure all settings; therefore, please change the login user name and password.

In addition, this machine is equipped with user authentication function, which can be configured to limit the access to this machine to only those who have a registered login name and password.

User Authentication and Accounting (User Login, Job Accounting) (page 9-1)

I want to...	Function	Reference page
Restrict the users of the machine.	User Login	page 9-2
	Authentication Security	page 9-5
	Auto Panel Reset	page 8-68
	ID Card Settings*1	page 9-31
Restrict the basic functions that can be used.	Local Authorization	page 9-19
	Group Authorization Set.	page 9-20
	Guest Authorization Set.	page 9-23
Prevent another user from handling the documents stored in the machine.	Custom Box	page 5-50
Output the document stored in the machine at the time when user operates the device via operation panel.	Remote Printing	page 8-31

*1 The optional Card Authentication Kit is required.

I want to...	Function	Reference page
Prevent the data stored in the machine from being leaked.	Data Overwrite*1	Refer to the **Data Security Kit (E) Operation Guide**.
	Encryption*1	
	PDF Encryption Functions	page 6-79
Completely delete the data on the machine before disposing of the machine.	Data Sanitization	page 8-65
Record the operation history of users.	Login History Settings	page 8-45
	Device Log History Settings	page 8-46
	Secure Comm. Error Log	page 8-47
Protect the transmission from interception and wiretapping.	IPP over SSL	page 8-57
	HTTPS	page 8-57
	LDAP Security	Refer to the **Command Center RX User Guide**.
	SMTP Security	page 8-55
	POP3 Security	page 8-55
	FTP Encrypted TX	page 6-83
	Enhanced WSD (SSL)	page 8-58
	IPSec	page 8-55
	SNMPv3	page 8-58
Verify the software in the machine.	Software Verification	page 8-65

*1 The optional Data Security Kit is required.

Command Center RX

If the machine is connected to the network, you can configure various settings using Command Center RX.

This section explains how to access Command Center RX, and how to change security settings and the host name.

Command Center RX User Guide

NOTE

To fully access the features of the Command Center RX pages, enter the User Name and Password and click [**Login**]. Entering the predefined administrator password allows the user to access all pages, including Document Box, Address Book, and Settings on the navigation menu. The factory default setting for the default user with administrator privileges is shown below. (Upper case and lower case letters are distinguished (case sensitive).)

Login User Name: **Admin**
Login Password: **Admin**

Settings that the administrator and general users can configure in Command Center RX are as follows.

Setting	Description	Administ-rator	General User
Device Information	The machine's structure can be checked.	○	○
Job Status	Displays all device information, including print and scan jobs, storing jobs, scheduled jobs, and job log history.	○	○
Document Box	Add or delete document boxes, or delete documents within a document box.	○	○*1
Address Book	Create, edit, or delete addresses and address groups.	○	○*1
Device Settings	Configure the advanced settings of the machine.	○	—
Function Settings	Configure the advanced function settings.	○	—
Network Settings	Configure the network advanced settings.	○	—
Security Settings	Configure the security advanced settings.	○	—
Management Settings	Configure the advanced management settings.	○	—

*1 The logged in user may not be able to configure some settings, depending on the permissions of the user.

NOTE

The optional FAX Kit is required in order to make use of fax functionality.

Here, information on the FAX settings has been omitted.

FAX Operation Guide

Accessing Command Center RX

1 Display the screen.

1 Launch your Web browser.

2 In the address or location bar, enter the machine's IP address or the host name.

Click in the following order to check the machine's IP address and the host name.

[**Device Information**] in the home screen > [**Identification/Wired Network**]

Examples: https://10.180.81.3/ (for IP address)
https://MFP001 (if the host name is "MFP001")

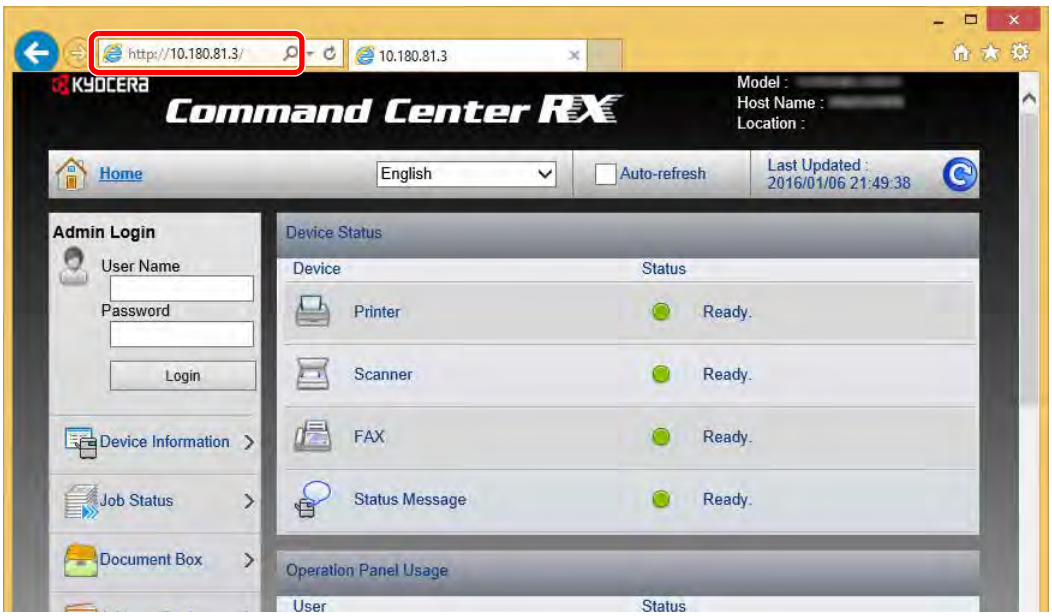

The web page displays basic information about the machine and Command Center RX as well as their current status.

NOTE

If the screen "There is a problem with this website's security certificate." is displayed, configure the certificate.

➔ **Command Center RX User Guide**

You can also continue the operation without configuring the certificate.

2 Configure the function.

Select a category from the navigation bar on the left of the screen.

NOTE

To fully access the features of the Command Center RX pages, enter the User Name and Password and click [**Login**]. Entering the predefined administrator password allows the user to access all pages, including Document Box, Address Book, and Settings on the navigation menu. The factory default setting for the default user with administrator privileges is shown below. (Upper case and lower case letters are distinguished (case sensitive).)

Login User Name: Admin
Login Password: Admin

Changing Security Settings

1 Display the screen.

1 Launch your Web browser.

2 In the address or location bar, enter the machine's IP address or the host name.

Click in the following order to check the machine's IP address and the host name.

[**Device Information**] in the home screen > [**Identification/Wired Network**]

3 Log in with administrator privileges.

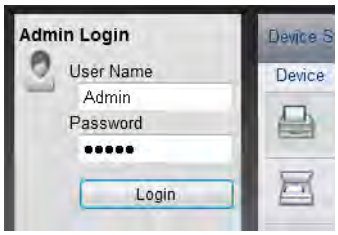

The factory default setting for the default user with administrator privileges is shown below. (Upper case and lower case letters are distinguished (case sensitive).)

Login User Name: Admin
Login Password: Admin

4 Click [**Security Settings**].

2 Configure the Security Settings.

From the [**Security Settings**] menu, select the setting you want to configure.

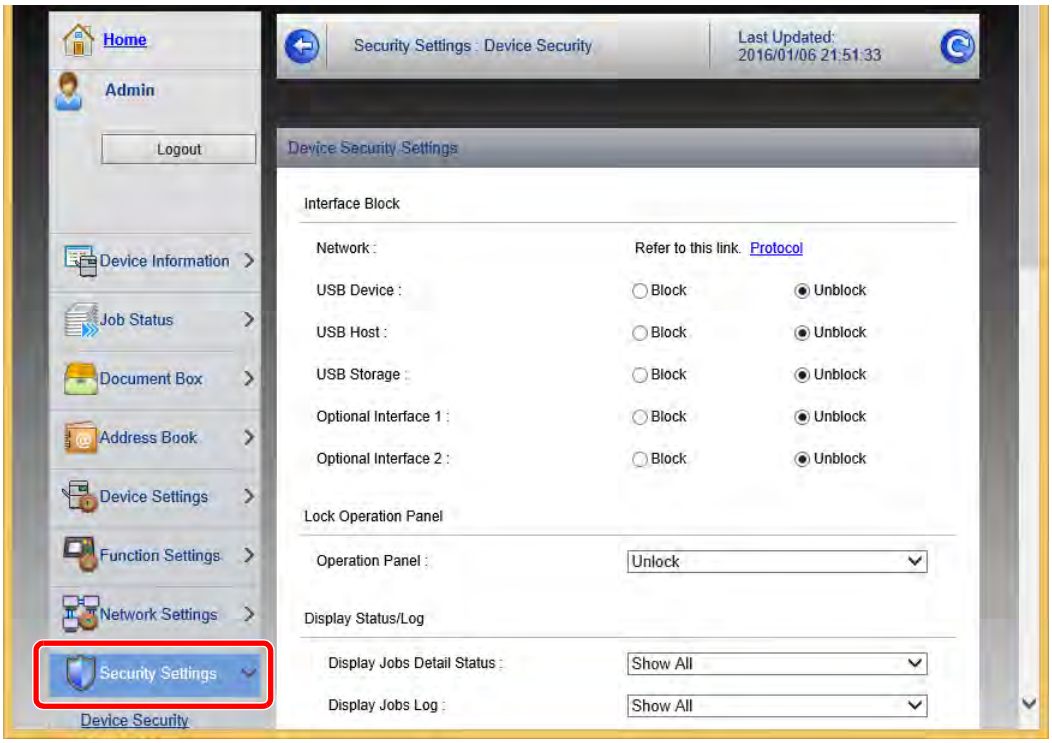

NOTE

For details on settings related to certificates, refer to the following:

Command Center RX User Guide

Changing Device Information

1 Display the screen.

1 Launch your Web browser.

2 In the address or location bar, enter the machine's IP address or the host name.

Click in the following order to check the machine's IP address and the host name.

[**Device Information**] in the home screen > [**Identification/Wired Network**]

3 Log in with administrator privileges.

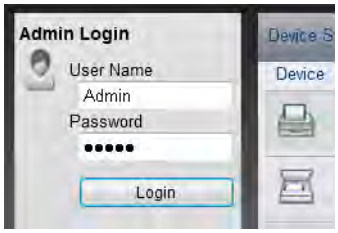

The factory default setting for the default user with administrator privileges is shown below. (Upper case and lower case letters are distinguished (case sensitive).)

Login User Name: Admin
Login Password: Admin

4 From the [**Device Settings**] menu, click [**System**].

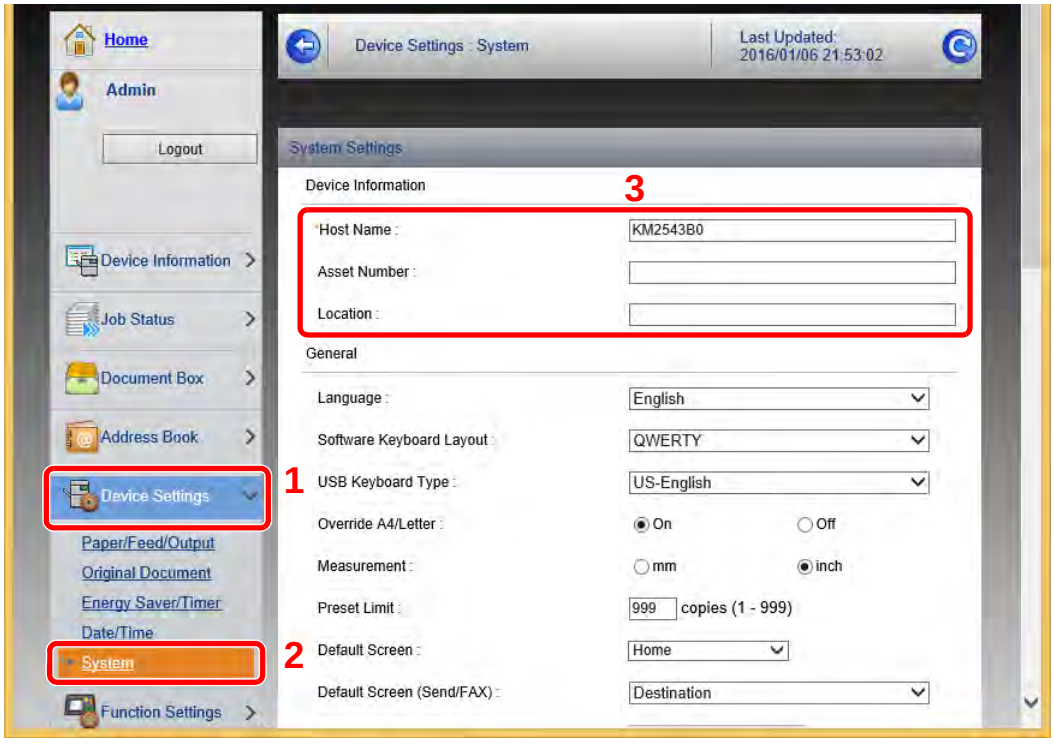

2 Specify the host name.

Enter the device information, and then click [**Submit**].

IMPORTANT

After changing the setting, restart the network or turn the machine OFF and then ON.

To restart the network interface card, click [Reset] in the [Management Settings] menu, and then click [Restart Network] in "Restart".

E-mail Settings

By configuring the SMTP settings, it is possible to send the images scanned by the machine as E-mail attachments and to send E-mail notices when jobs have been completed.

To use this function, this machine must be connected to a mail server using the SMTP protocol.

In addition, configure the following.

- SMTP settings
  Item: "SMTP Protocol" and "SMTP Server Name" in "SMTP"
- The sender address when the machine sends E-mails
  Item: "Sender Address" in "E-mail Send Settings"
- The setting to limit the size of E-mails
  Item: "E-mail Size Limit" in "E-mail Send Settings"

The procedure for specifying the SMTP settings is explained below.

1 Display the screen.

Display the SMTP Protocol screen.

1 Launch your Web browser.

2 In the address or location bar, enter the machine's IP address or the host name.

Click in the following order to check the machine's IP address and the host name.

[**Device Information**] in the home screen > [**Identification/Wired Network**]

3 Log in with administrator privileges.

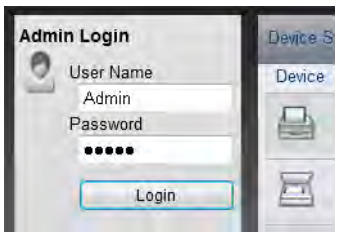

The factory default setting for the default user with administrator privileges is shown below. (Upper case and lower case letters are distinguished (case sensitive).)

Login User Name: Admin
Login Password: Admin

4 From the [**Network Settings**] menu, click [**Protocol**].

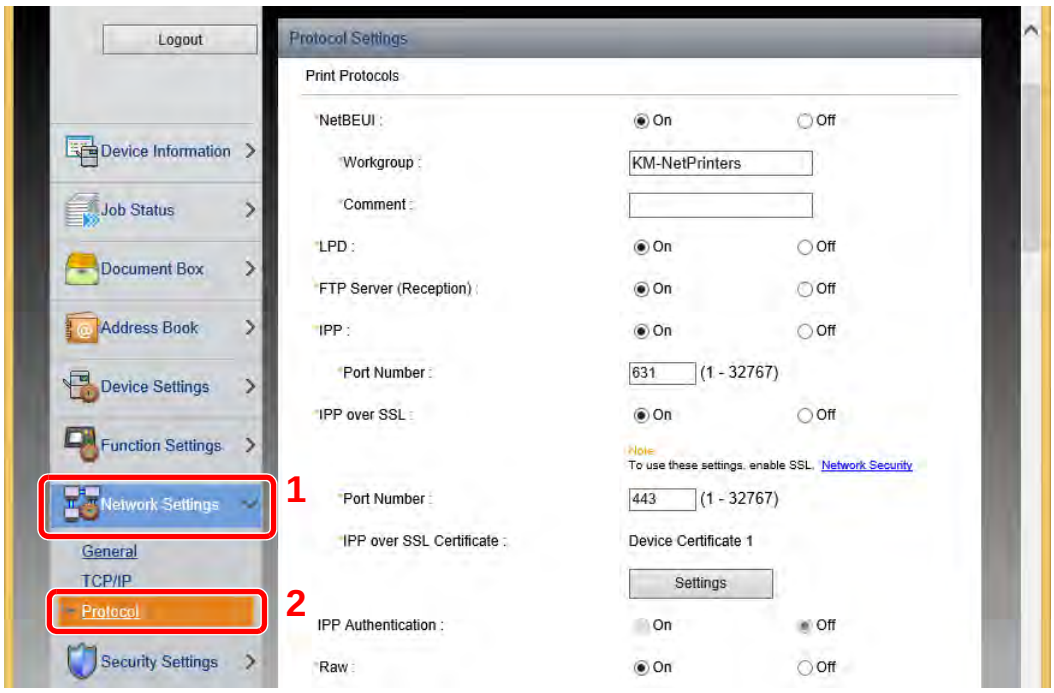

2 Configure the settings.

Set "SMTP (E-mail TX)" to [**On**] in the "Send Protocols".

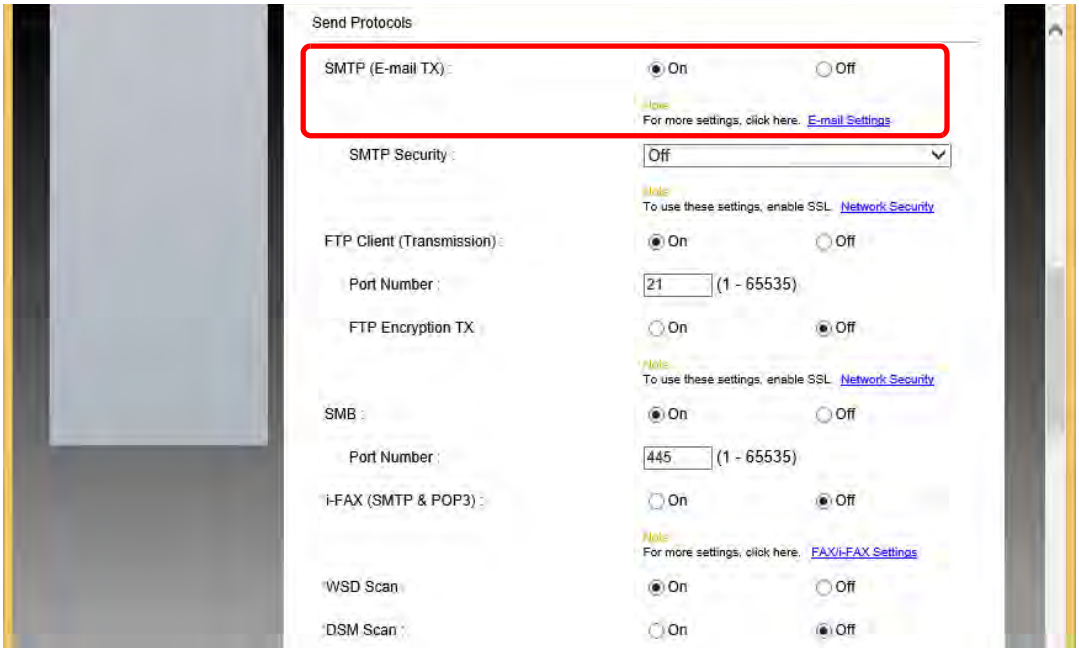

3 Display the screen.

Display the E-mail Settings screen.

From the [**Function Settings**] menu, click [**E-mail**].

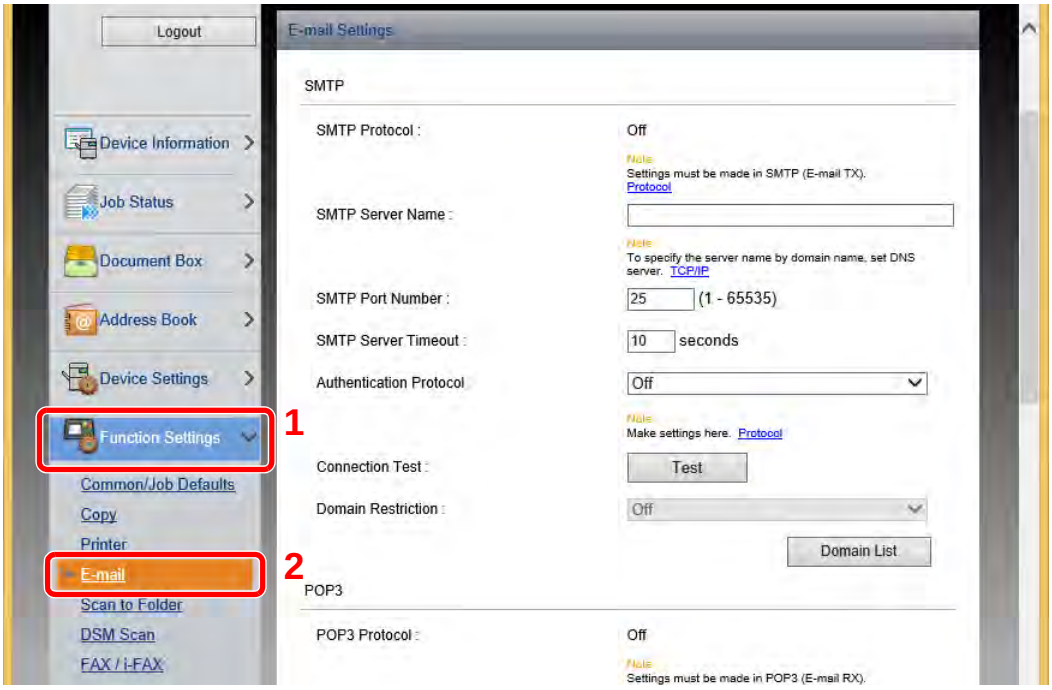

4 Configure the settings.

Enter "SMTP" and "E-mail Send Settings" items.

Setting		Description
SMTP		Set to send e-mail from the machine.
	SMTP Protocol	Displays the SMTP protocol settings. Check that "SMTP Protocol" is set to [**On**]. If [**Off**] is set, click [**Protocol**] and set the SMTP protocol to [**On**].
	SMTP Server Name[*1]	Enter the host name or IP address of the SMTP server.
	SMTP Port Number	Specify the port number to be used for SMTP. The default port number is 25.
	SMTP Server Timeout	Set the amount of time to wait before time-out in seconds.
	Authentication Protocol	To use SMTP authentication, enter the user information for authentication.
	SMTP Security	Set SMTP security. Turn on "SMTP Security" in "SMTP (E-mail TX)" on the [**Protocol Settings**] page.
	Connection Test	Tests to confirm that the E-mail function is operating under the settings without sending a mail.
	Domain Restriction	To restrict the domains, click the [**Domain List**] and enter the domain names of addresses to be allowed or rejected. Restriction can also be specified by e-mail address.

Setting		Description
POP3	**POP3 Protocol**	You don't need to set the following items when you only enable the function of sending e-mail from the machine. Set the following items if you want to enable the function of receiving e-mail on the machine. ➔ **Command Center RX User Guide**
	Check Interval	
	Run once now	
	Domain Restriction	
	POP3 User Settings	
E-mail Send Settings	**E-mail Size Limit**	Enter the maximum size of E-mail that can be sent in kilobytes. When E-mail size is greater than this value, an error message appears and E-mail sending is cancelled. Use this setting if you have set E-mail Size Limit for SMTP server. If not, enter a value of 0 (zero) to enable E-mail sending regardless of the size limit.
	Sender Address[*1]	Specify the sender address for when the machine sends E-mails, such as the machine administrator, so that a reply or non-delivery report will go to a person rather than to the machine. The sender address must be entered correctly for SMTP authentication. The maximum length of the sender address is 128 characters.
	Signature	Enter the signature. The signature is free form text that will appear at the end of the E-mail body. It is often used for further identification of the machine. The maximum length of the signature is 512 characters.
	Function Defaults	Change the function default settings in [**Common/Job Default Settings**] page.

*1 Be sure to enter the items.

5 Click [Submit].

Registering Destinations

1 Display the screen.

1 Launch your Web browser.

2 In the address or location bar, enter the machine's IP address or the host name.

Click in the following order to check the machine's IP address and the host name.

[**Device Information**] in the home screen > [**Identification/Wired Network**]

3 Log in with administrator privileges.

The factory default setting for the default user with administrator privileges is shown below. (Upper case and lower case letters are distinguished (case sensitive).)

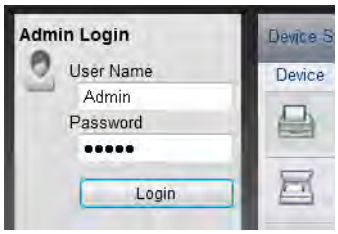

Login User Name: Admin
Login Password: Admin

4 From the [**Address Book**] menu, click [**Machine Address Book**].

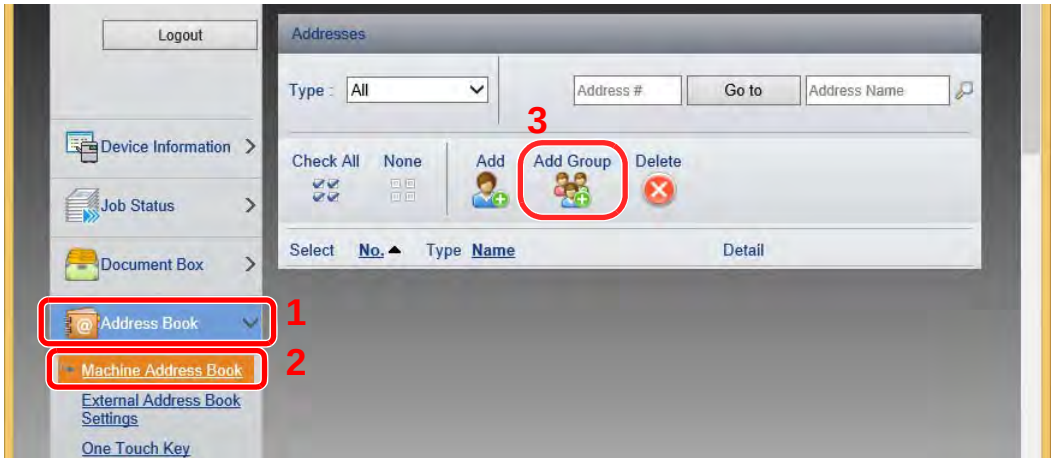

5 Click [**Add**].

2 Populate the fields.

1 Enter the destination information.

Enter the information for the destination you want to register. The fields to populate are the same as when registering via operation panel.

Registering Destinations in the Address Book (page 3-30)

2 Click [**Submit**].

Creating a New Custom Box

1 Display the screen.

1 Launch your Web browser.

2 In the address or location bar, enter the machine's IP address or the host name.

Click in the following order to check the machine's IP address and the host name.

[**Device Information**] in the home screen > [**Identification/Wired Network**]

3 From the [**Document Box**] menu, click [**Custom Box**].

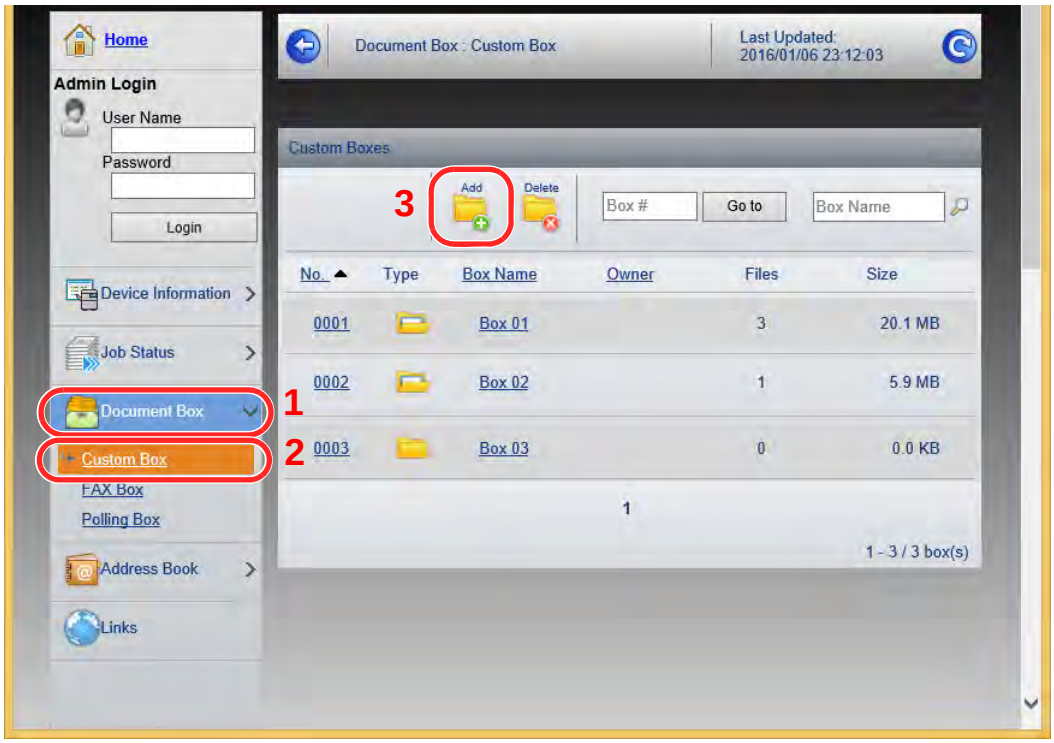

4 Click [**Add**].

2 Configure the Custom Box.

1 Enter the box details.

Enter the information for the custom box you want to register. For details on the fields to populate, refer to the following:

Command Center RX User Guide

2 Click [**Submit**].

Printing a document stored in a Custom Box

1 Display the screen.

1 Launch your Web browser.

2 In the address or location bar, enter the machine's IP address or the host name.
Click in the following order to check the machine's IP address and the host name.
[**Device Information**] in the home screen > [**Identification/Wired Network**]

3 From the [**Document Box**] menu, click [**Custom Box**].

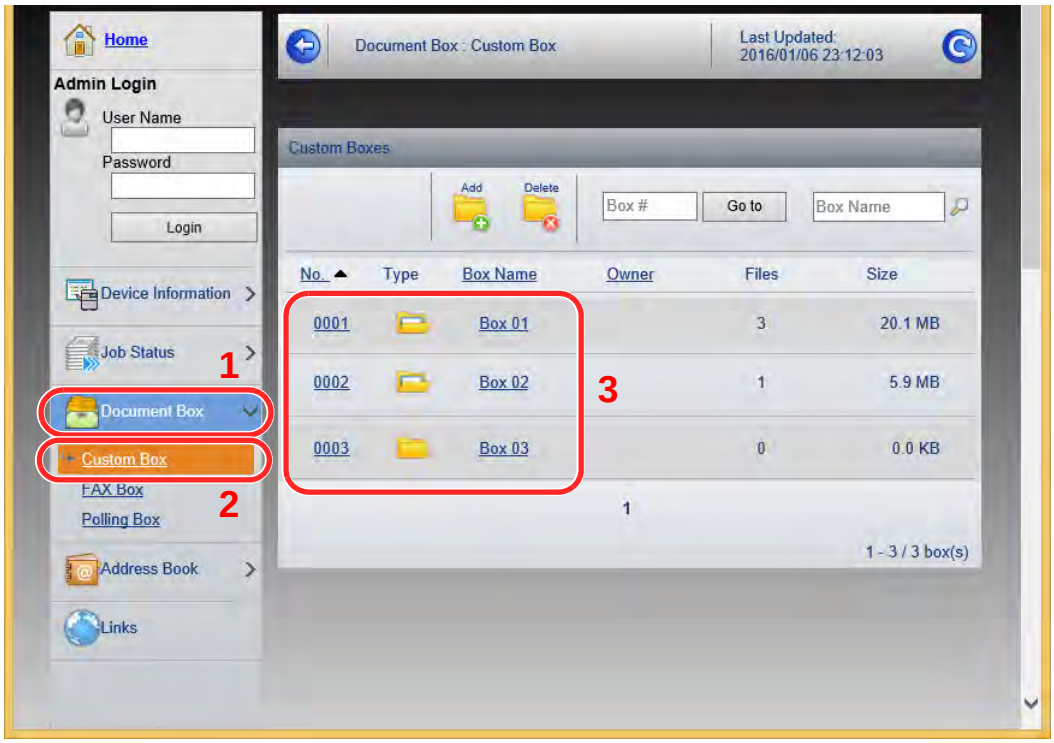

4 Click the number or name of the Custom Box in which the document is stored.

2 Print the document.

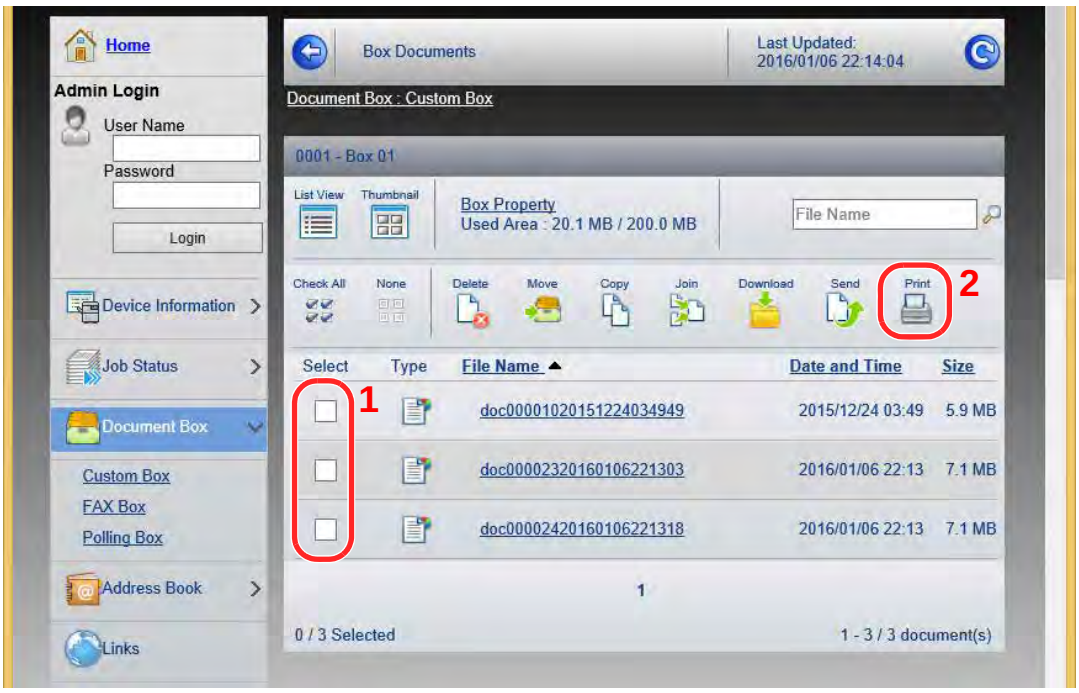

1 Select the document you wish to print.

Select the checkbox of the document to be printed.

2 Click [**Print**].

3 Configure settings for printing, click [**Print**].

Transferring Data from Our Other Products

By using the machine's utility, you can smoothly migrate address books when the machine is to be replaced.

This section explains how to transfer data between our products.

Migrating the Address Book

The Address Book registered on the machine can be backed up or migrated using the KYOCERA Net Viewer on the included DVD.

For details on operating the KYOCERA Net Viewer, refer to the following:

KYOCERA Net Viewer User Guide

Backing Up Address Book Data to PC

1 Launch the KYOCERA Net Viewer.

2 Create a backup.

1 Right-click on the model name from which you want to back up the Address Book, and select [**Advanced**] - [**Set multiple devices**].

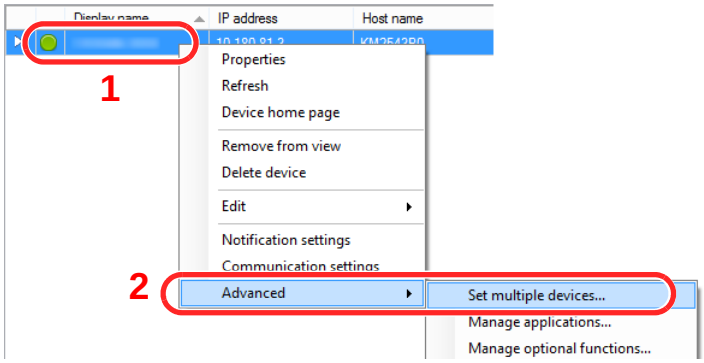

2 Select [**Custom Mode**] and click [**Next**].

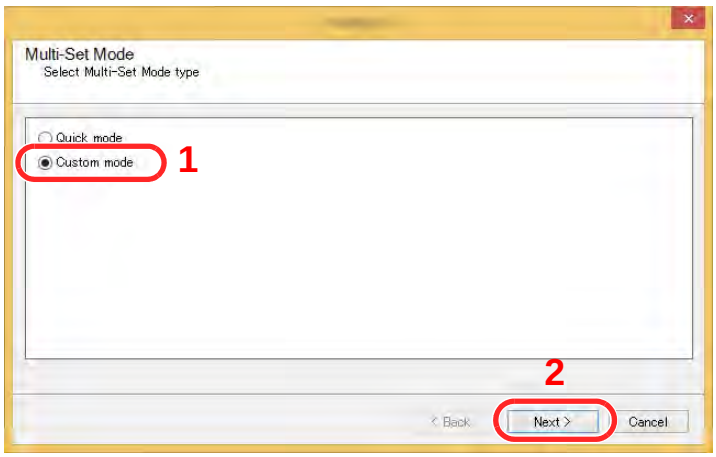

3 Select destination device group and click [**Next**].

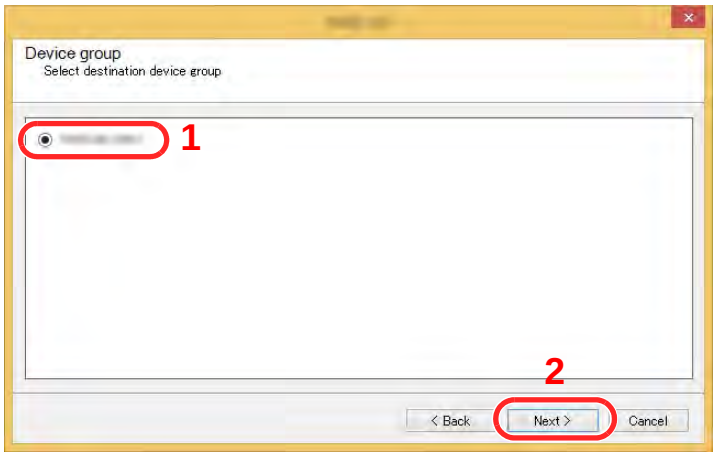

4 Select [**Device Address Book**] and click [**Next**].

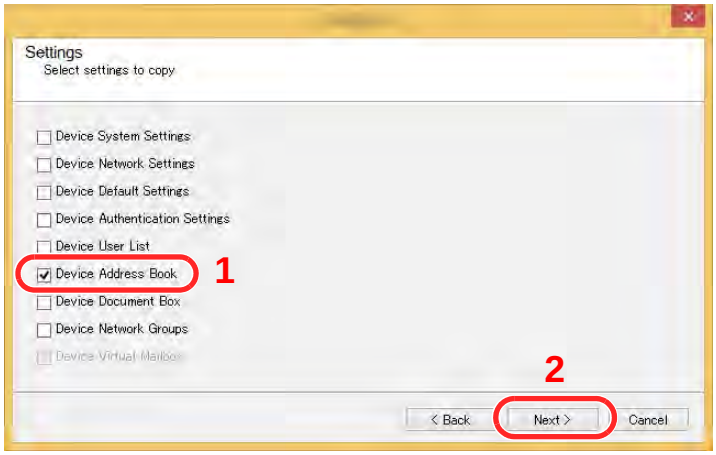

5 Select [**Create from device**] and remove the checkmark from [**Overwrite settings on target device**], and then click [**Next**].

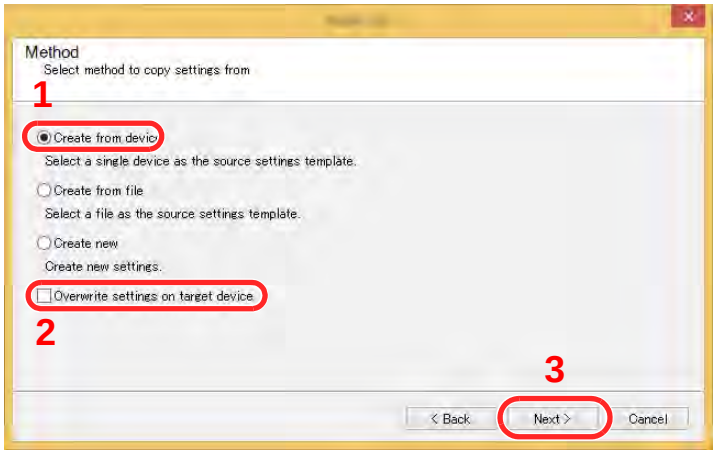

6 Select the model you want to back up, and click [**Next**].

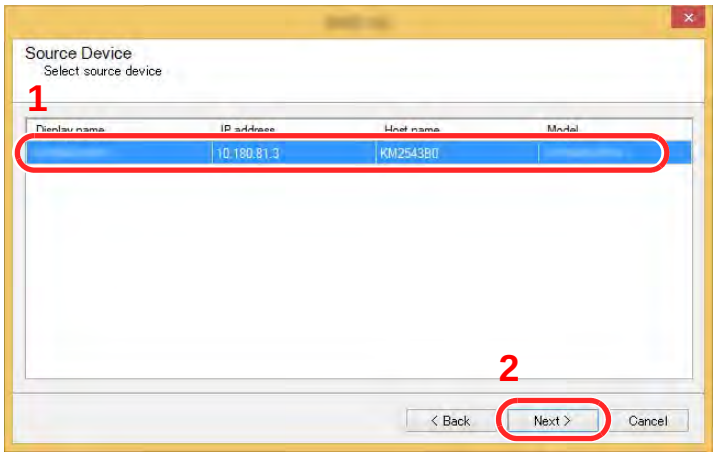

NOTE

If the "Admin Login" screen appears, enter the "Admin Login" and "Login Password", and then click [**OK**]. The default settings are as follows (Upper case and lower case letters are distinguished (case sensitive)).

Login User Name: **Admin**
Login Password: **Admin**

7 Click on [**Save to file**].

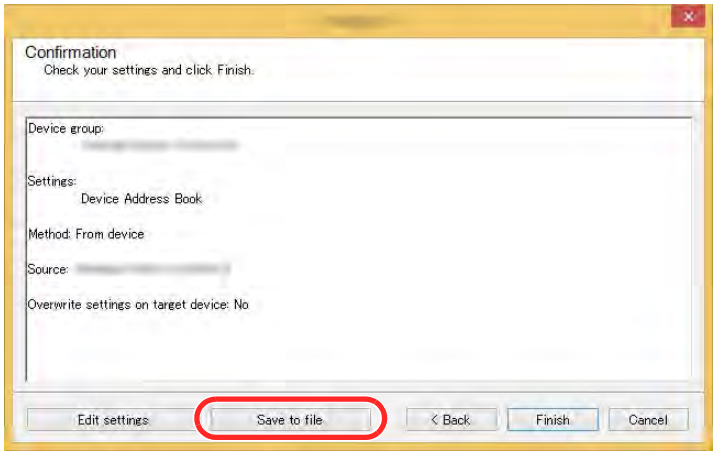

8 Specify the location to save the file, enter the file name, and then click [**Save**].

For "Save as type", make sure to select "XML File".

9 After saving the file, always click [**Cancel**] to close the screen.

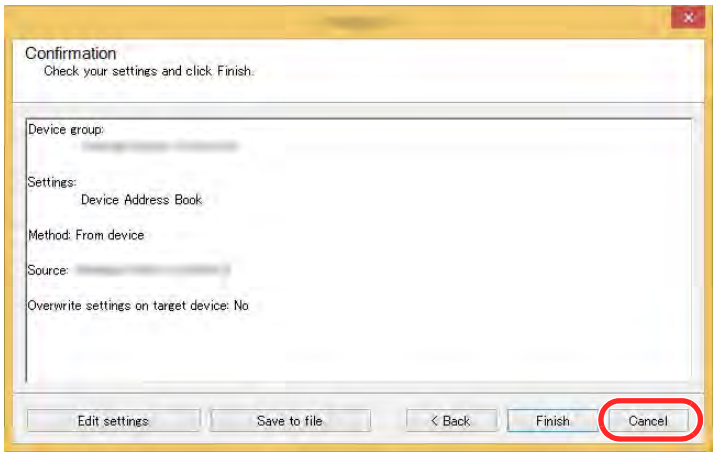

Please note that selecting [**Finish**] will write the data to the machine's Address Book.

Writing Address Book Data to the Machine

1 Launch the KYOCERA Net Viewer.

2 Load the Address Book data.

1 Right-click on the model name to which you want to transfer the Address Book, and select [**Advanced**] - [**Set multiple devices**].

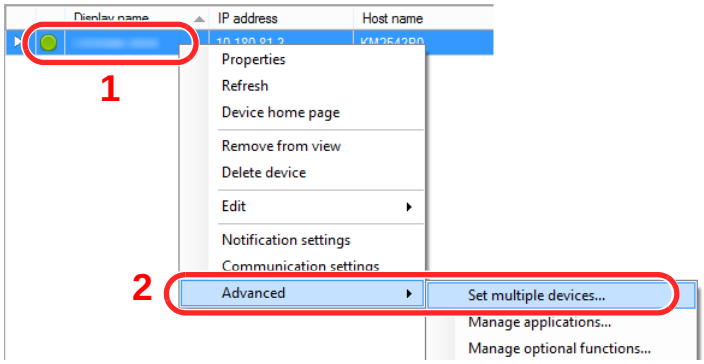

2 Select [**Custom Mode**] and click [**Next**].

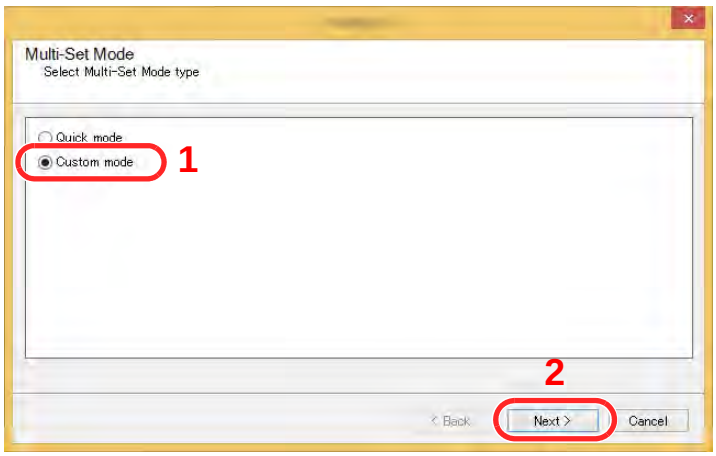

3 Select destination device group and click [**Next**].

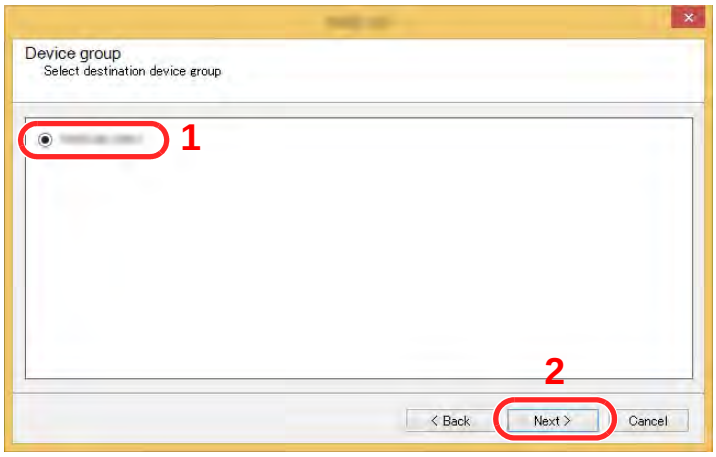

4 Select [**Device Address Book**] and click [**Next**].

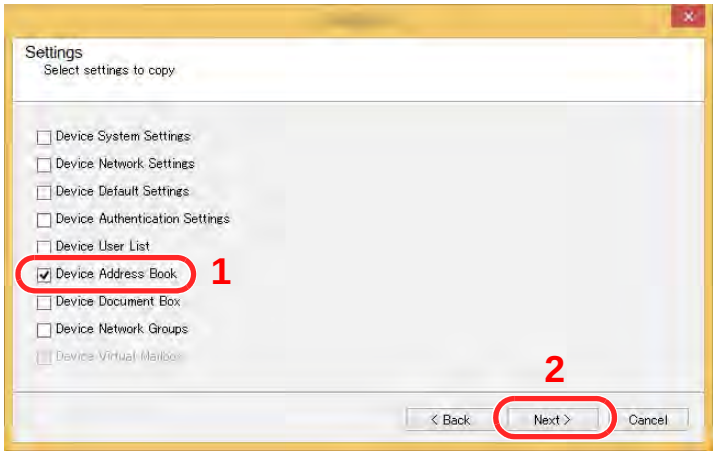

5 Select [**Create from file**] and remove the checkmark from [**Overwrite settings on target device**], and then click [**Next**].

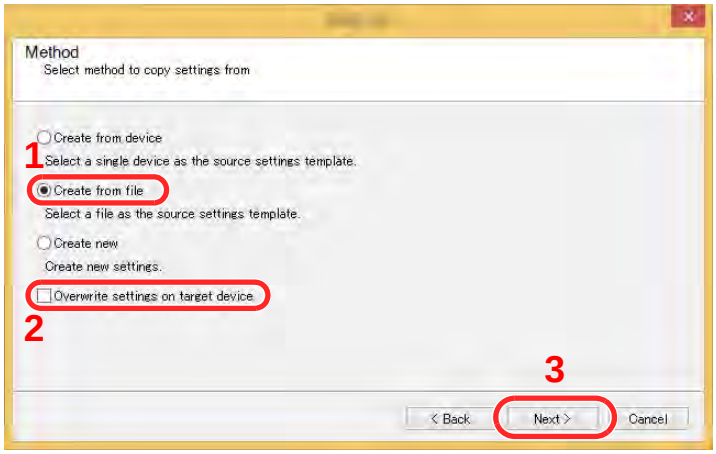

Selecting the [**Overwrite settings on target device**] checkbox will overwrite the machine's Address Book from entry No.1.

6 Click [**Browse**] and select the backup Address Book file, and then click [**Next**].

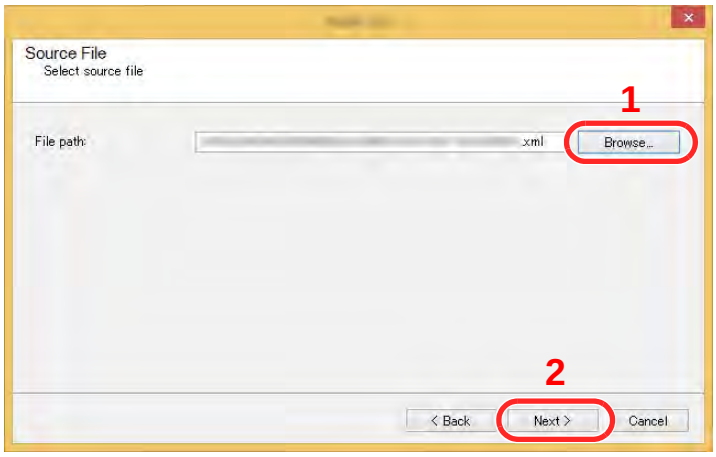

7 Click [**Finish**].

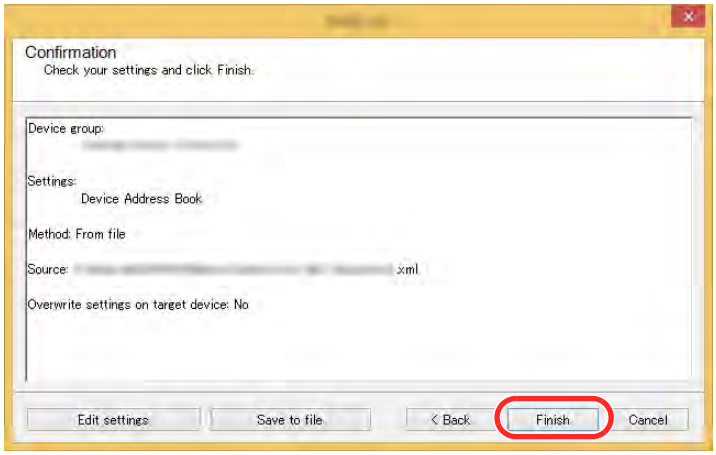

The write process of the Address Book data starts.

8 Once the write process is complete, click [**Close**].

3 Preparation before Use

This chapter explains the following operations.

Loading Paper 3-2
Precaution for Loading Paper 3-2
Selecting the Paper Feeder Units 3-3
Loading in Cassette 1 3-4
Loading in Cassette 2 3-7
Loading Envelopes or Cardstock in the Cassettes 3-10
Loading in the Large Capacity Feeder 3-14
Loading in the Side Feeder 3-16
Precautions for Outputting Paper 3-18
Paper Stopper 3-18
Envelope Stack Guide 3-18
Stack Level Adjuster 3-19
Preparation for Sending a Document to a Shared Folder in a PC 3-20
Making a note of the computer name and full computer name 3-20
Making a note of the user name and domain name 3-21
Creating a Shared Folder, Making a Note of a Shared Folder 3-22
Configuring Windows Firewall 3-25
Registering Destinations in the Address Book 3-30
Adding a Destination (Address Book) 3-30
Adding a Destination on One Touch Key (One Touch Key) 3-37

Loading Paper

Precaution for Loading Paper

When you open a new package of paper, fan the sheets to separate them slightly prior to loading in the following steps.

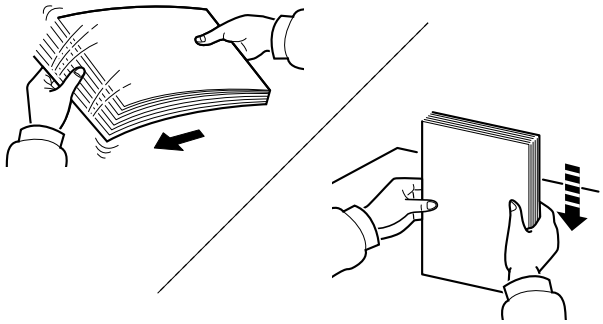

Fan the paper, then tap it on a level surface.

In addition, note the following points.

- If the paper is curled or folded, straighten it before loading. Paper that is curled or folded may cause a jam.
- Avoid exposing opened paper to high humidity as dampness can be a cause of problems. Seal any remaining paper after loading in the multi purpose tray or cassettes back in the paper storage bag.
- Leaving paper in the cassette for a long time may cause a discoloration of paper by heat from the cassette heater.
- If the machine will not be used for a prolonged period, protect all paper from humidity by removing it from the cassettes and sealing it in the paper storage bag.

IMPORTANT

If you copy onto used paper (paper already used for printing), do not use paper that is stapled or clipped together. This may damage the machine or cause poor image quality.

NOTE

If you use special paper such as letterhead, paper with holes or paper with pre-prints like logo or company name, refer to the following:

Paper (page 11-13)

Selecting the Paper Feeder Units

Select the paper feeder units according to the size and type of paper.

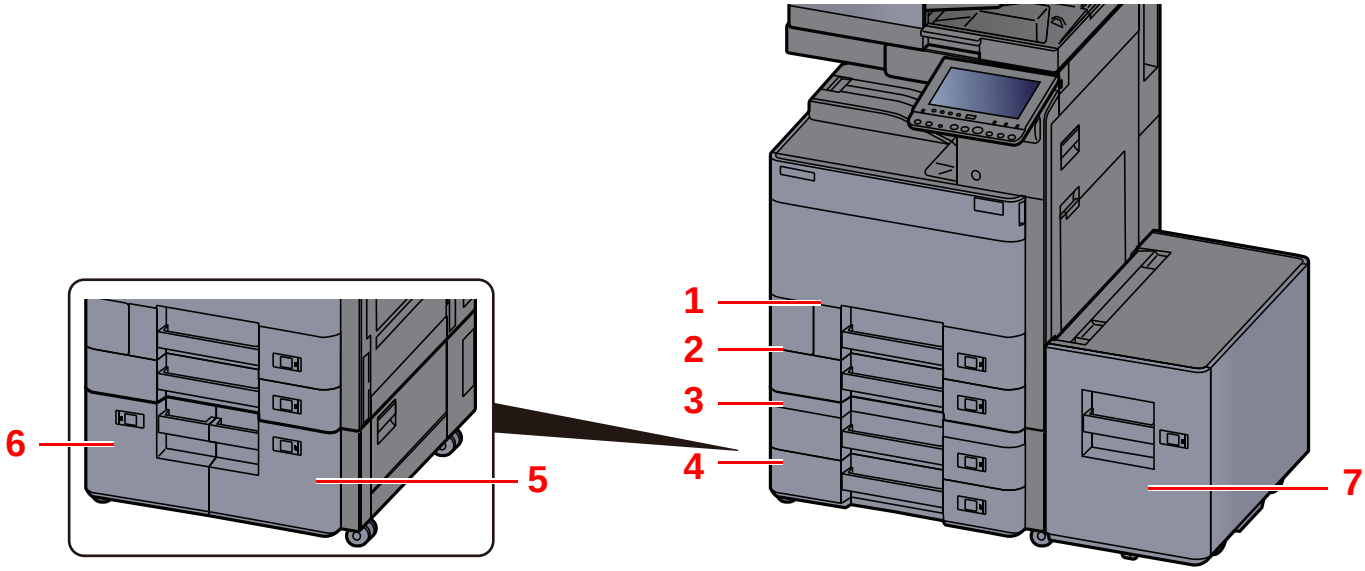

No.	Name	Paper Size	Paper Type	Capacity	Page
1	Cassette 1	A4-R, A4, A5-R, A5, A6-R, B5-R, B5, B6-R, Letter-R, Letter, Legal, Statement-R, Executive, Oficio II, Folio, 16K-R, 16K, ISO B5, Envelope #10, Envelope #9, Envelope #6, Envelope Monarch, Envelope DL, Envelope C5, Hagaki (Cardstock), Oufuku hagaki (Return postcard), Youkei 4, Youkei 2, Custom 1 to 4	Plain, Rough, Vellum, Recycled, Preprinted, Bond, Cardstock, Color, Prepunched, Letterhead, Envelope, Thick, High Quality, Custom 1 to 8	500 sheets (80 g/m^2)	page 3-4
2	Cassette 2	A3, A4-R, A4, A5-R, A5, A6-R, B4, B5-R, B5, B6-R, 216×340 mm, SRA3, Ledger, Letter-R, Letter, Legal, Statement-R, Executive, 12×18", Oficio II, Folio, 8K, 16K-R, 16K, ISO B5, Envelope #10, Envelope #9, Envelope #6, Envelope Monarch, Envelope DL, Envelope C5, Envelope C4, Hagaki (Cardstock), Oufuku hagaki (Return postcard), Youkei 4, Youkei 2, Custom 1 to 4			
3	Cassette 3				
4	Cassette 4				
5	Cassette 3	A4, Letter, B5 (Fixed to one of sizes.)	Plain, Rough, Vellum, Recycled, Preprinted, Bond, Color, Prepunched, Letterhead, Thick, High Quality, Custom 1 to 8	1,500 sheets (80 g/m^2)	page 3-14
6	Cassette 4				
7	Cassette 5			3,000 sheets (80 g/m^2)	page 3-16

NOTE

- The number of sheets that can be held varies depending on your environment and paper type.
- You should not use inkjet printer paper or any paper with a special surface coating. (Such paper may cause paper jams or other faults.)
- For higher quality color printing, use special color paper.

Loading in Cassette 1

1 Pull the cassette completely out of the machine.

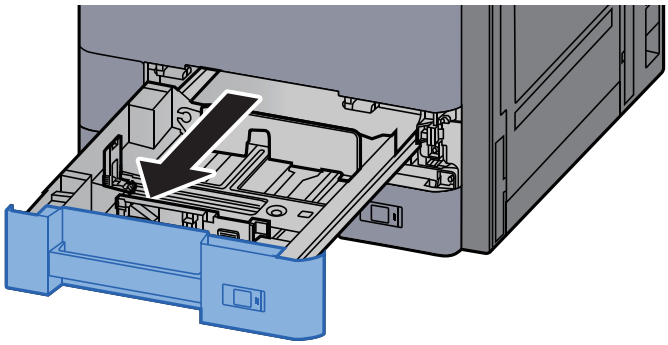

NOTE

Do not pull out more than one cassette at a time.

2 Adjust the paper length guide to the paper size required.

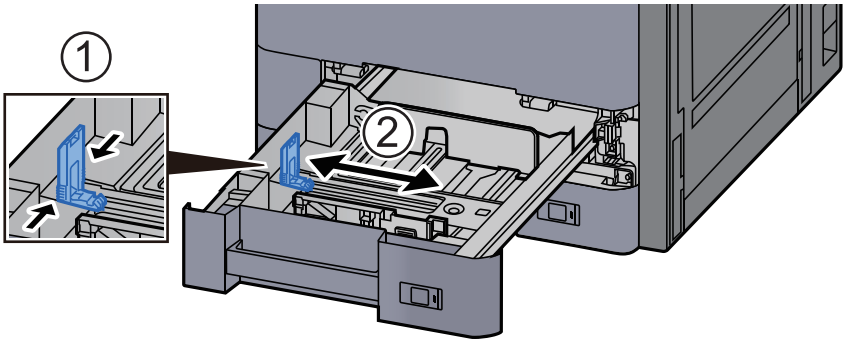

NOTE

When using Legal size paper, move the paper length guide to the extreme left and lay it down.

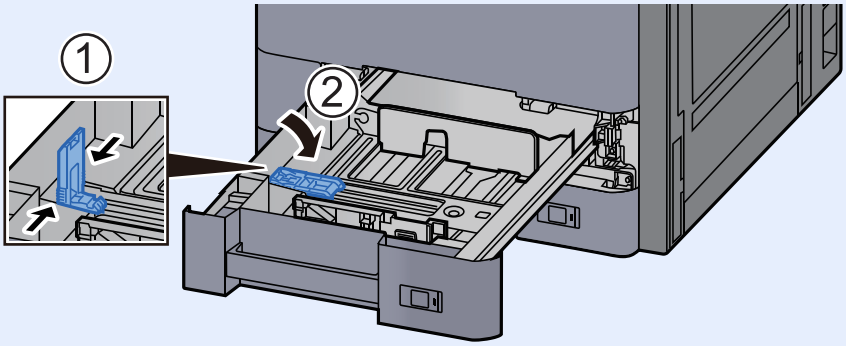

3 Adjust the position of the paper width guides located on the left and right sides of the cassette.

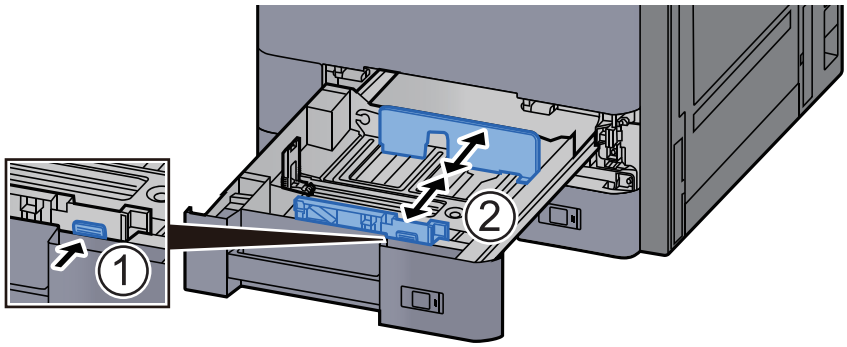

4 Load paper.

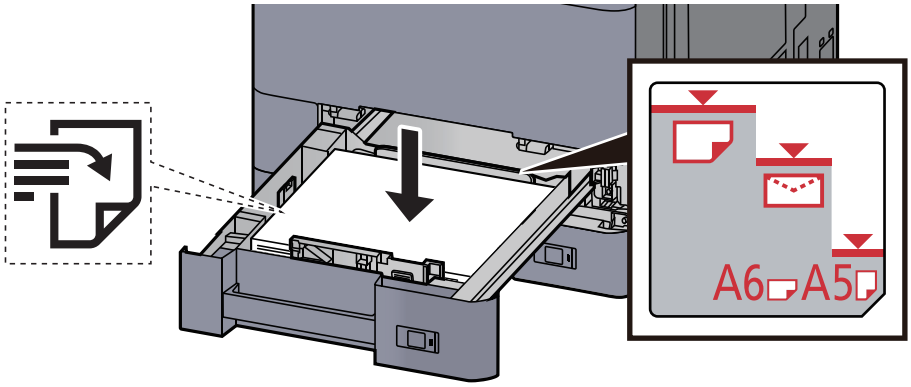

IMPORTANT

- **Load the paper with the print side facing up.**
- **After removing new paper from its packaging, fan the paper before loading it in the cassette.**

  Precaution for Loading Paper (page 3-2)
- **Before loading the paper, be sure that it is not curled or folded. Paper that is curled or folded may cause paper jams.**
- **Ensure that the loaded paper does not exceed the level indicator (see illustration above).**
- **If paper is loaded without adjusting the paper length guide and paper width guide, the paper may skew or become jammed.**

5 Be sure that the paper length and width guides rest securely against the paper.

If there is a gap, readjust the guides to fit the paper.

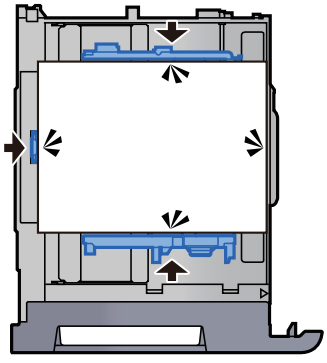

6 Gently push the cassette back in.

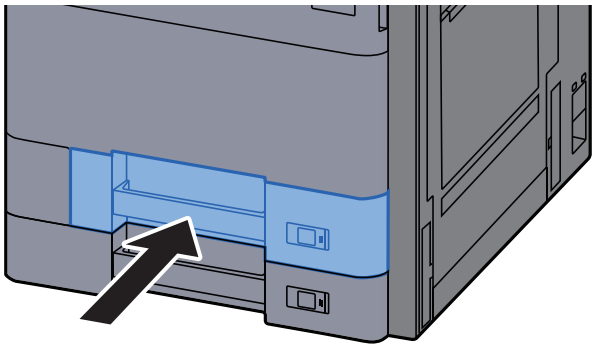

7 Insert the indication on the sheet so as to match the size and type of paper to be placed.

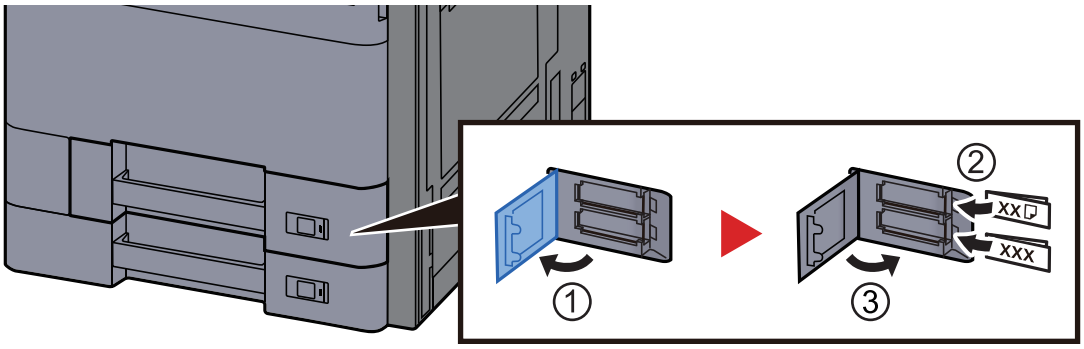

8 Display the screen.

[**System Menu/Counter**] > [**Cassette/MP Tray Settings**] > "Cassette 1" [**Next**]

9 Configure the function.

Select the paper size and paper type.

Cassette 1 (to 5) (page 8-7)

NOTE

Paper size can be automatically detected and selected, refer to the following.

Paper Selection (page 6-19)

Cassette 1 (to 5) (page 8-7)

Loading in Cassette 2

1 Pull the cassette completely out of the machine.

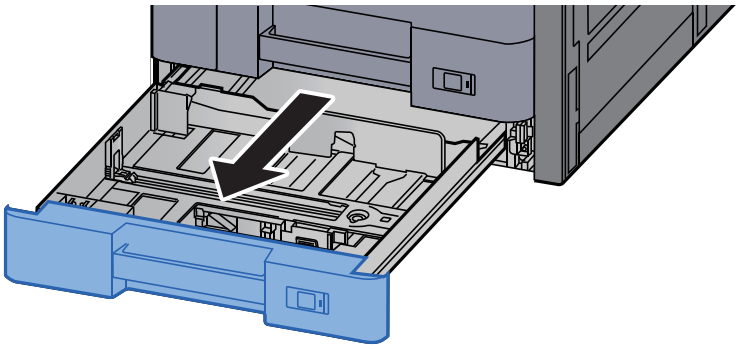

NOTE

Do not pull out more than one cassette at a time.

2 Adjust the paper length guide to the paper size required.

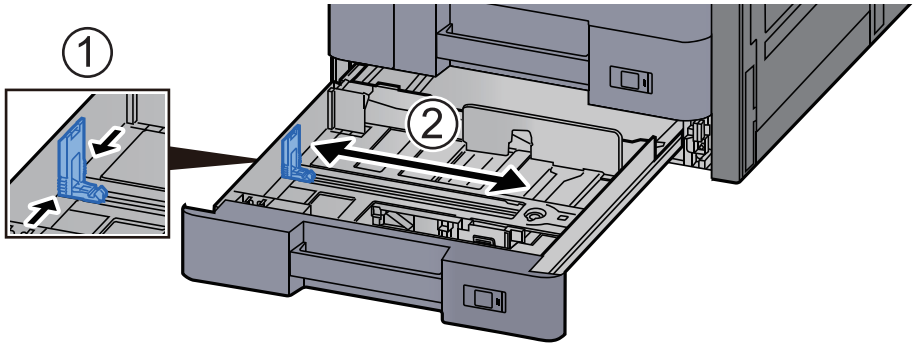

NOTE

When using 12×18" size paper, move the paper length guide to the extreme left and lay it down.

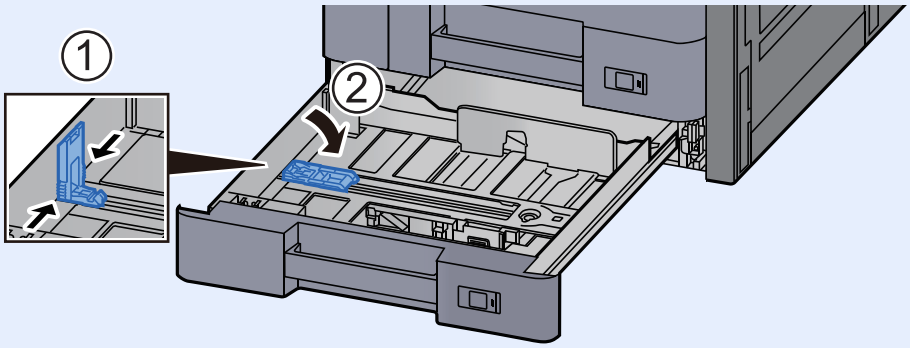

3 Adjust the position of the paper width guides located on the left and right sides of the cassette.

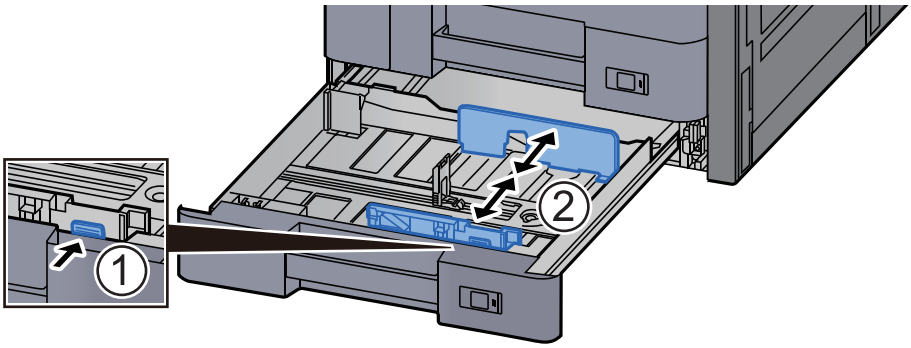

NOTE

When using SRA3/12×18", A3, or Ledger paper, adjust the auxiliary guide accordingly.

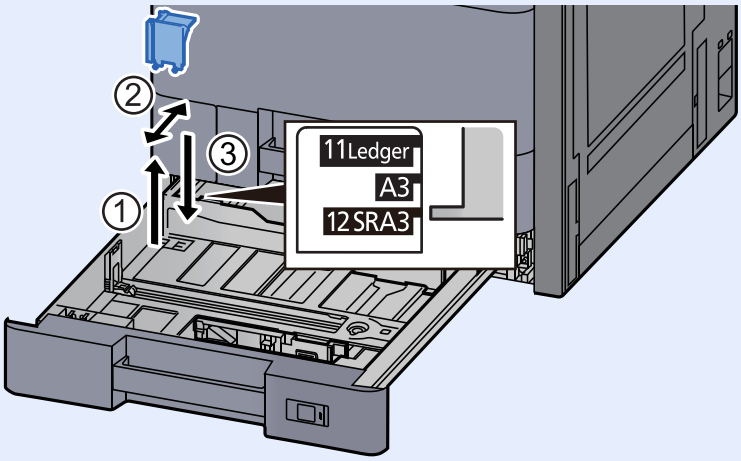

4 Load paper.

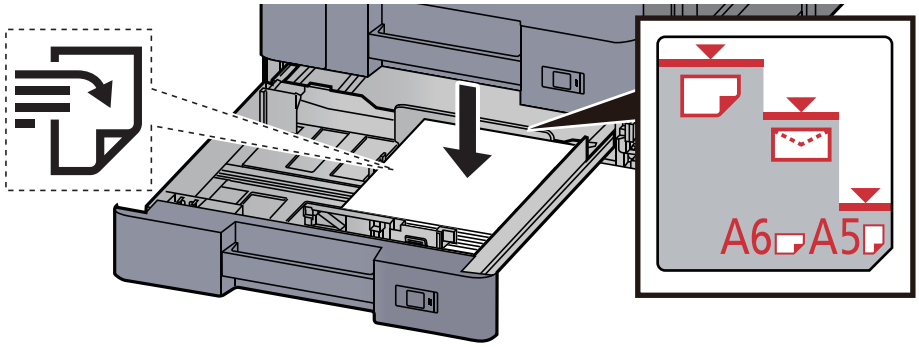

IMPORTANT

- **Load the paper with the print side facing up.**
- **After removing new paper from its packaging, fan the paper before loading it in the cassette.**

  Precaution for Loading Paper (page 3-2)
- **Before loading the paper, be sure that it is not curled or folded. Paper that is curled or folded may cause paper jams.**
- **Ensure that the loaded paper does not exceed the level indicator (see illustration above).**
- **If paper is loaded without adjusting the paper length guide and paper width guide, the paper may skew or become jammed.**

5 Be sure that the paper length and width guides rest securely against the paper.

If there is a gap, readjust the guides to fit the paper.

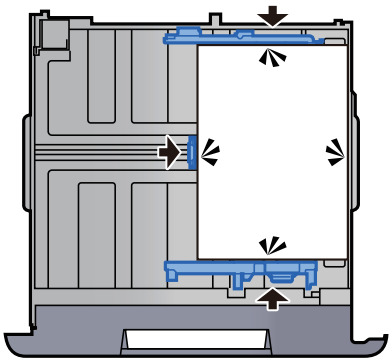

6 Gently push the cassette back in.

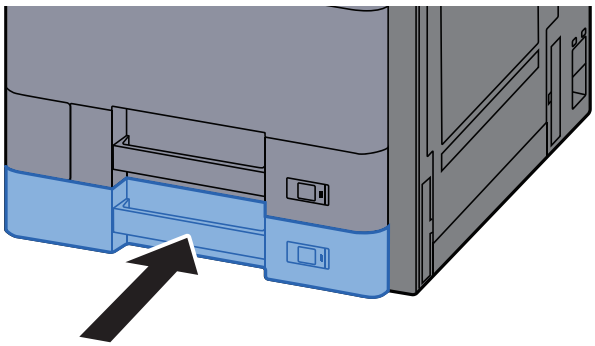

7 Insert the indication on the sheet so as to match the size and type of paper to be placed.

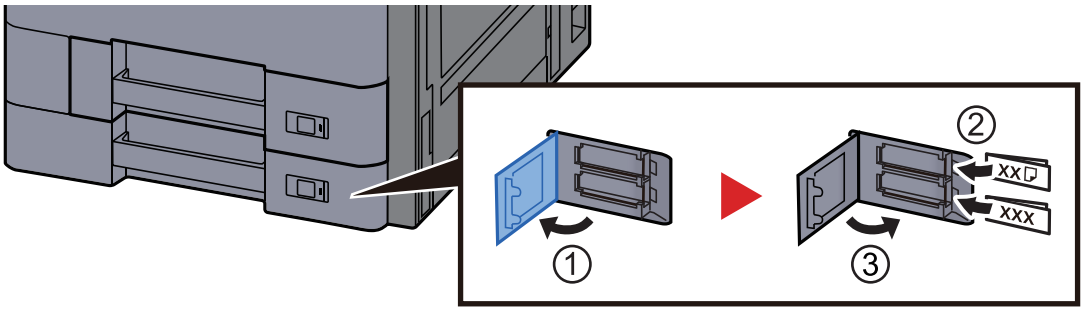

8 Display the screen.

[**System Menu/Counter**] > [**Cassette/MP Tray Settings**] > "Cassette 2" [**Next**]

9 Configure the function.

Select the paper size and paper type.

Cassette 1 (to 5) (page 8-7)

NOTE

Paper size can be automatically detected and selected, refer to the following.

Paper Selection (page 6-19)

Cassette 1 (to 5) (page 8-7)

Loading Envelopes or Cardstock in the Cassettes

Load envelope or cardstock in the cassettes. Here, we'll explain the procedures for cassette 1, as an example.

1 Pull Cassette 1 completely out of the machine.

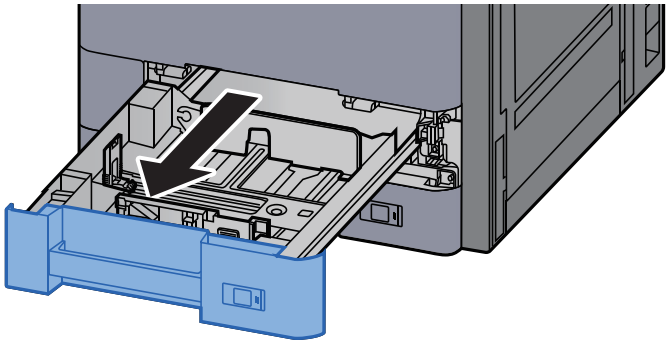

NOTE

Do not pull out more than one cassette at a time.

2 Remove the envelope feed guide.

When loading cardstock, go to step 5.

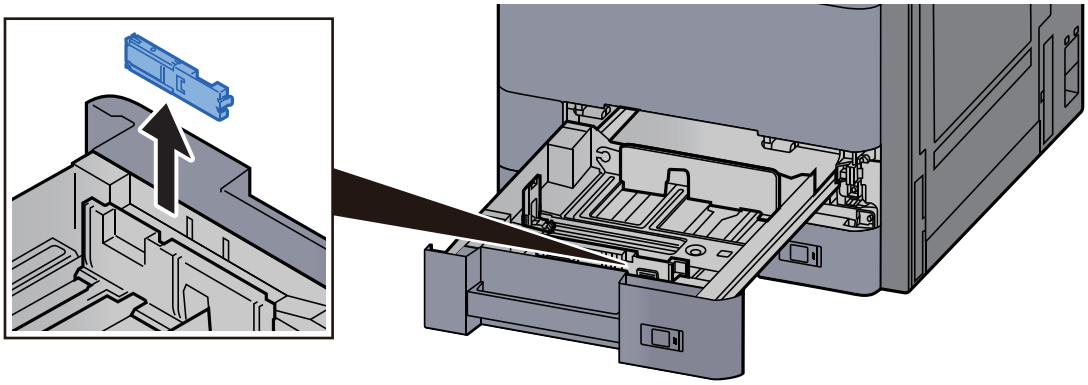

3 Expand the lever of the envelope feed guide when loading envelopes larger than Envelope C5 which has a width of 162 mm (6.4").

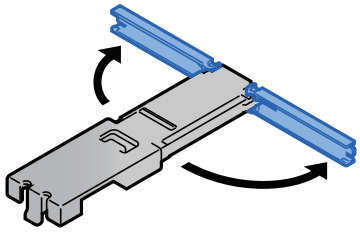

4 **Attach the envelope feed guide as shown in the illustration.**

The illustration below shows that the lever of the envelope feed guide is expanded.

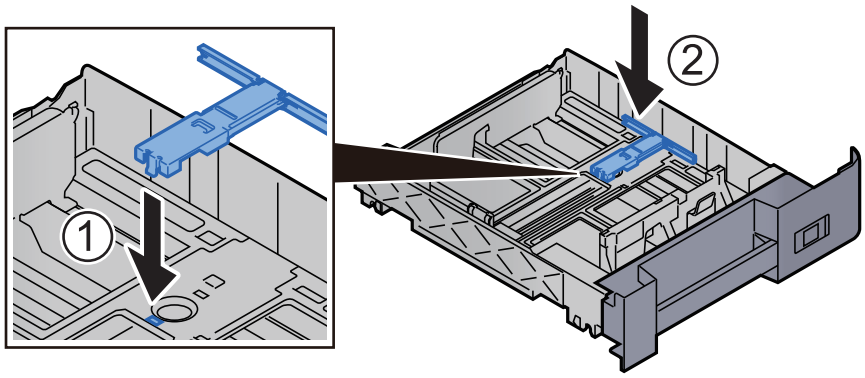

5 **Adjust the paper length guide to the paper size required.**

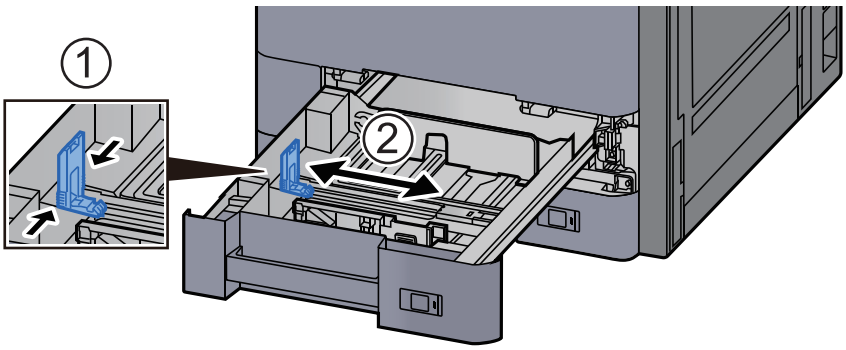

6 **Adjust the position of the paper width guides located on the left and right sides of the cassette.**

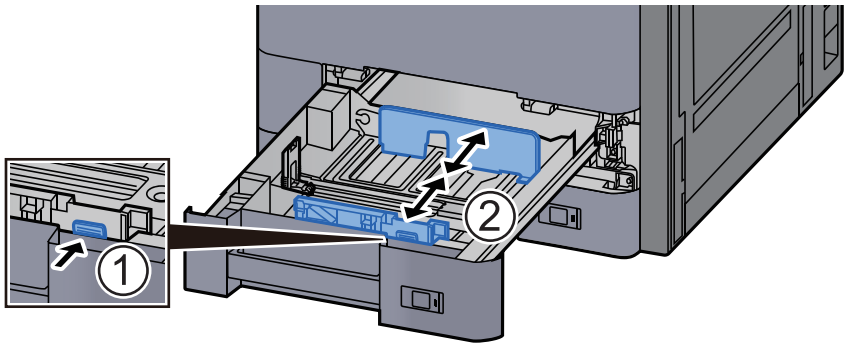

7 Load the envelope with the print side facing up.

Example: When printing the address.

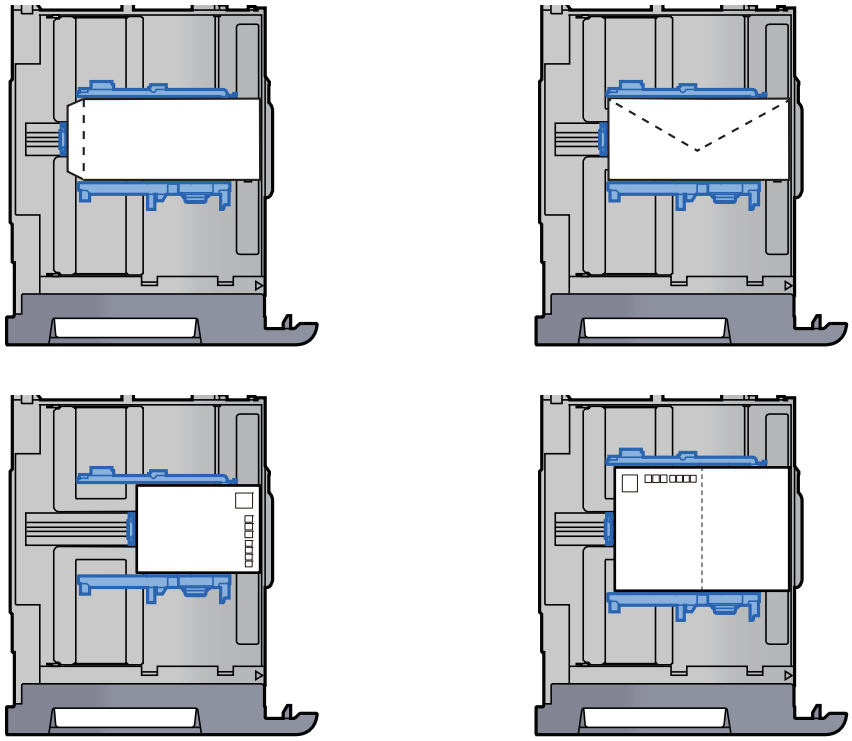

IMPORTANT

- **How to load envelopes (orientation and facing) will differ depending on the type of envelope. Be sure to load it in correctly, otherwise printing may be done in the wrong direction or on the wrong face.**
- **Ensure that loaded envelopes do not exceed the level indicator.**

NOTE

Approximately 100 post cards or 30 envelopes can be set.

8 Be sure that the paper length and width guides rest securely against the paper.

If there is a gap, readjust the guides to fit the paper.

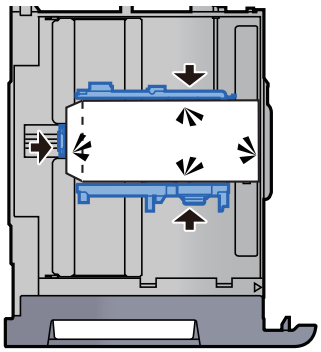

9 Gently push Cassette 1 back in.

10 Display the screen.

[**System Menu/Counter**] > [**Cassette/MP Tray Settings**] > ”Cassette 1” [**Next**]

11 Configure the function.

Select the paper size and type of envelope.

Cassette 1 (to 5) (page 8-7)

12 Set by using the printer driver on the PC.

Select the paper size and type of envelope using the printer driver on the PC.

Printing on Standard Sized Paper (page 4-4)

Printing on Non-standard Sized Paper (page 4-6)

Loading in the Large Capacity Feeder

The procedures here represent the cassette 3.

1 Pull the cassette completely out of the machine.

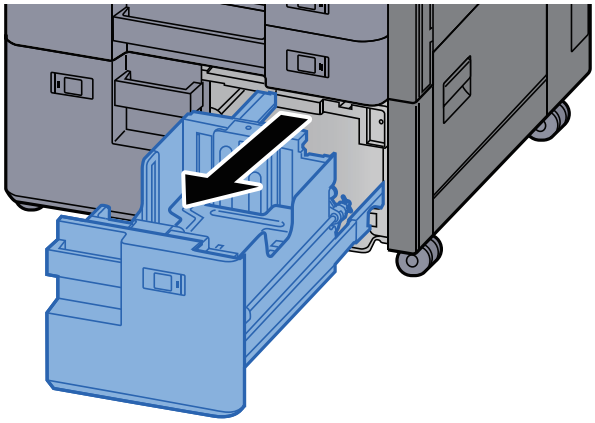

2 Load paper.

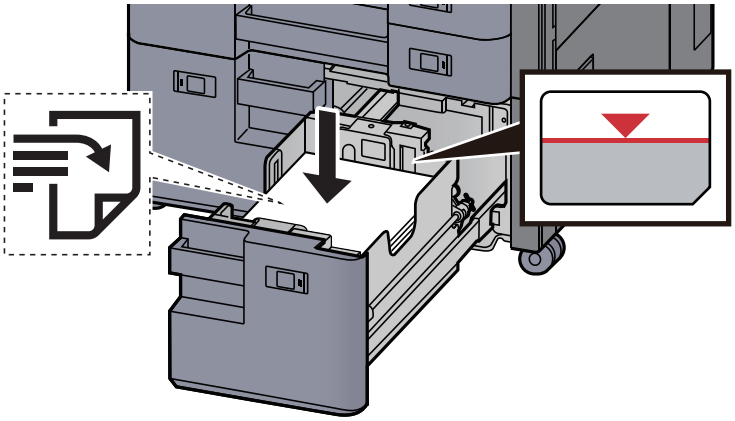

IMPORTANT

- **Load the paper with the print side facing up.**
- **After removing new paper from its packaging, fan the paper before loading it in the cassette.**

Precaution for Loading Paper (page 3-2)

- **Before loading the paper, be sure that it is not curled or folded. Paper that is curled or folded may cause paper jams.**
- **Ensure that the loaded paper does not exceed the level indicator.**

3 Gently push the cassette back in.

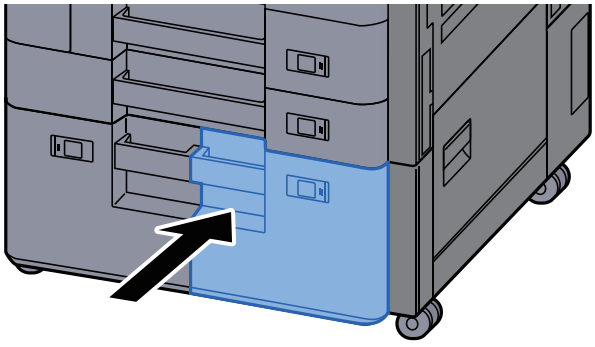

4 Insert the indication on the sheet so as to match the size and type of paper to be placed.

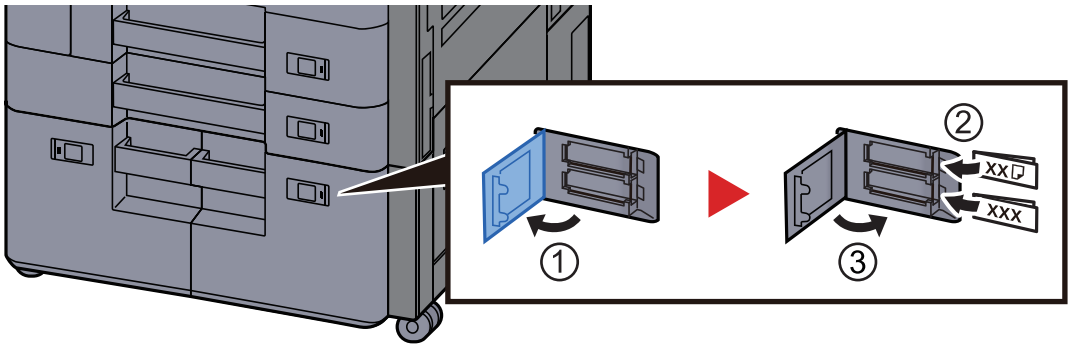

5 Display the screen.

[**System Menu/Counter**] > [**Cassette/MP Tray Settings**] > "Cassette 3" [**Next**] > "Media Type" [**Change**]

6 Configure the function.

Select the paper type.

Cassette 1 (to 5) (page 8-7)

Loading in the Side Feeder

1 **Pull the cassette completely out of the machine.**

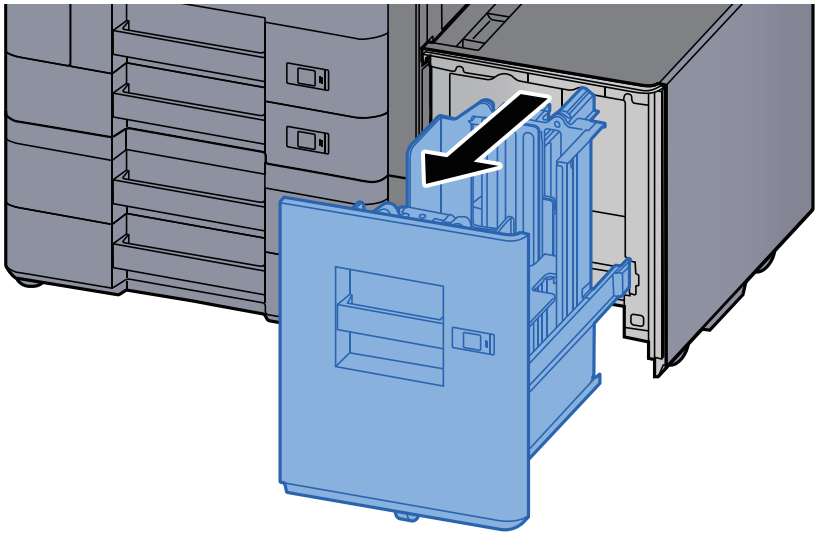

2 **Load paper.**

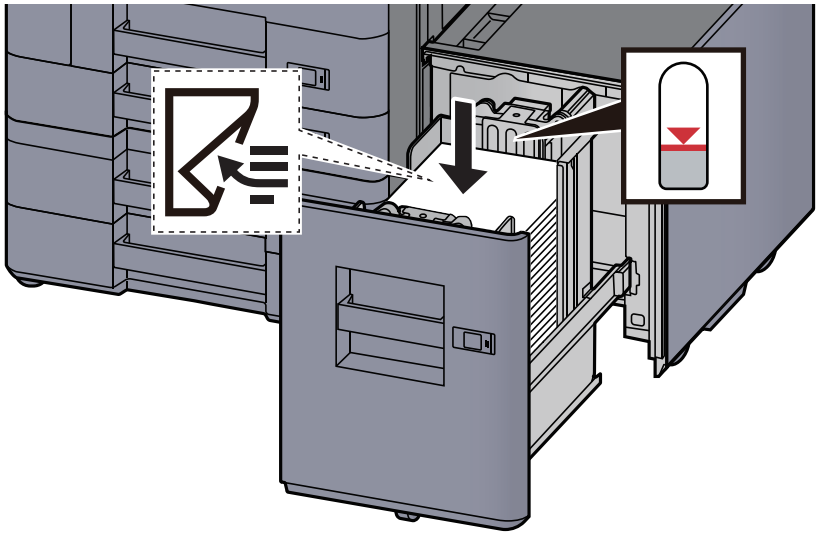

IMPORTANT

- **Load the paper with the print side facing down.**
- **After removing new paper from its packaging, fan the paper before loading it in the cassette.**

  Precaution for Loading Paper (page 3-2)
- **Before loading the paper, be sure that it is not curled or folded. Paper that is curled or folded may cause paper jams.**
- **Ensure that the loaded paper does not exceed the level indicator.**

3 Gently push the cassette back in.

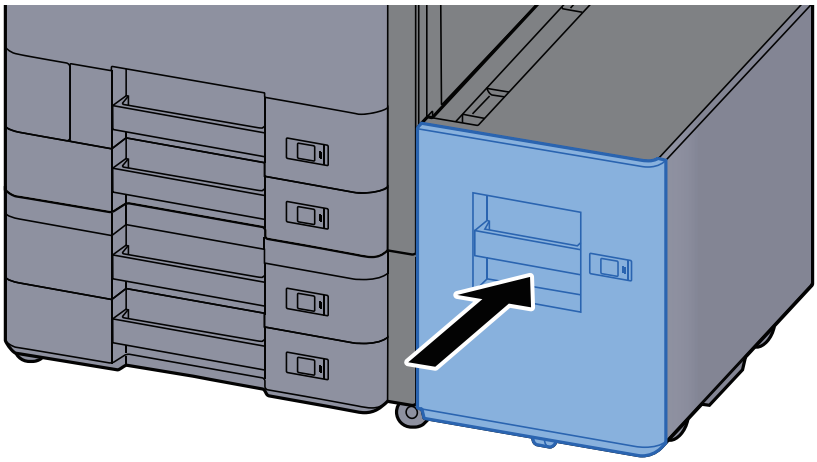

4 Insert the indication on the sheet so as to match the size and type of paper to be placed.

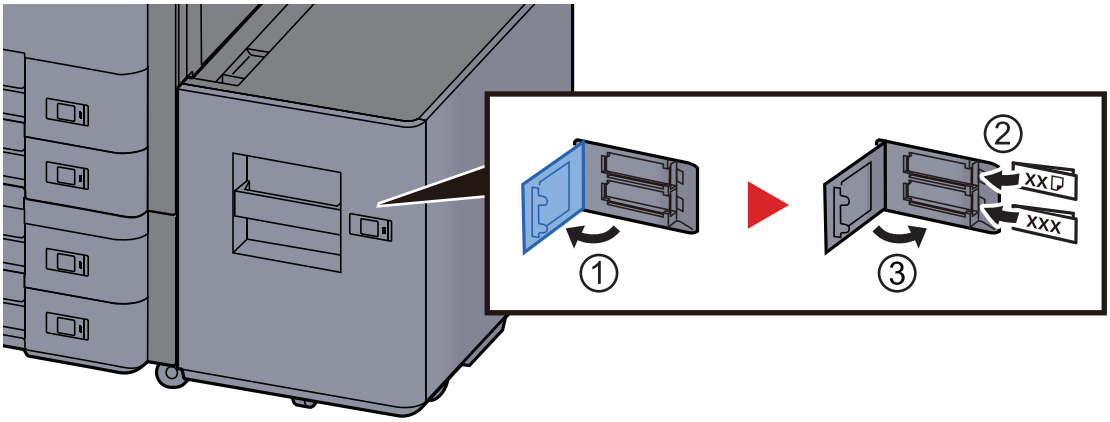

5 Display the screen.

[**System Menu/Counter**] > [**Cassette/MP Tray Settings**] > "Cassette 5" [**Next**] > "Media Type" [**Change**]

6 Configure the function.

Select the paper type.

Cassette 1 (to 5) (page 8-7)

Precautions for Outputting Paper

Paper Stopper

When using paper A3/Ledger or larger, open the paper stopper shown in the figure.

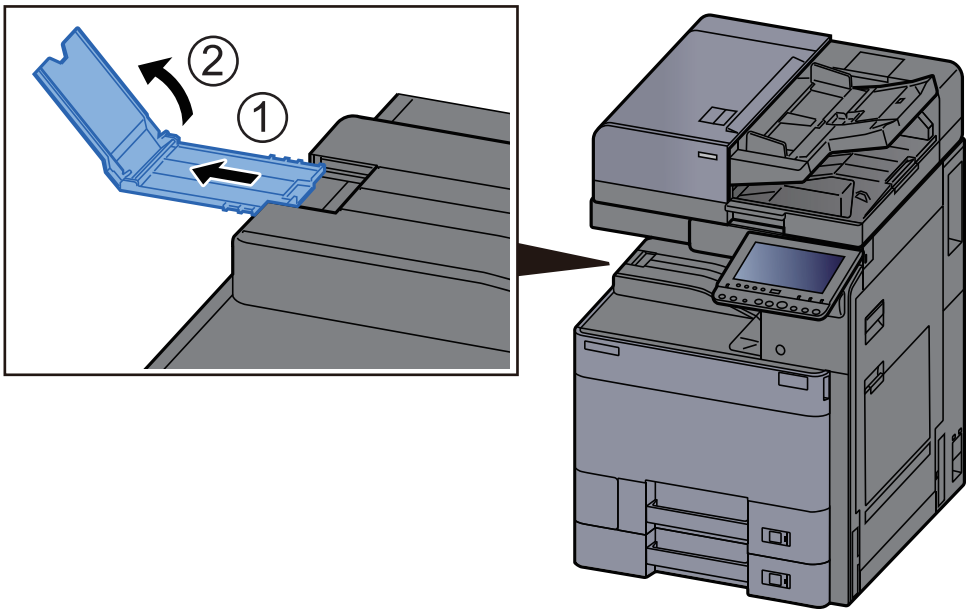

NOTE

When using the Job Separator for output, you can if needed open the paper stopper on the Job Separator.

Envelope Stack Guide

To use an envelope, open the Envelope Stack Guide as shown below.

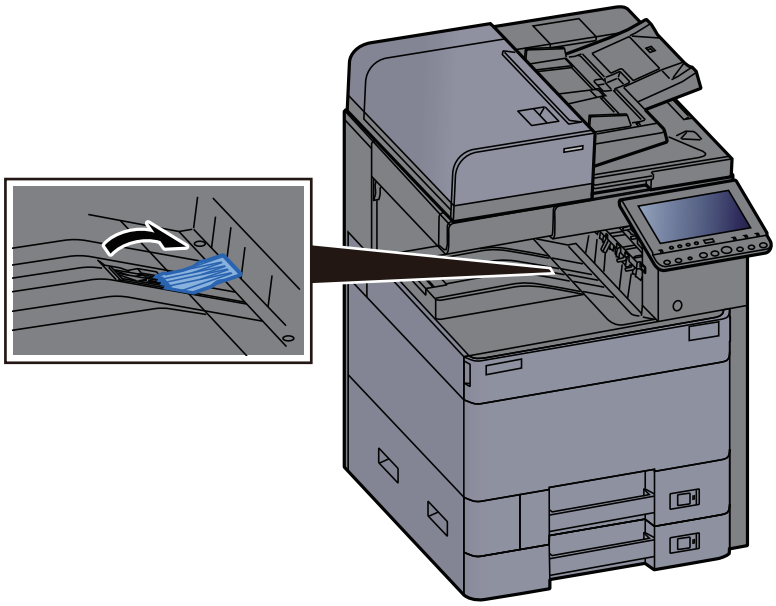

Stack Level Adjuster

If the paper output to the Job Separator is significantly curled, you can extend the Stack Level Adjuster as described in the figure.

Extending the Stack Level Adjuster

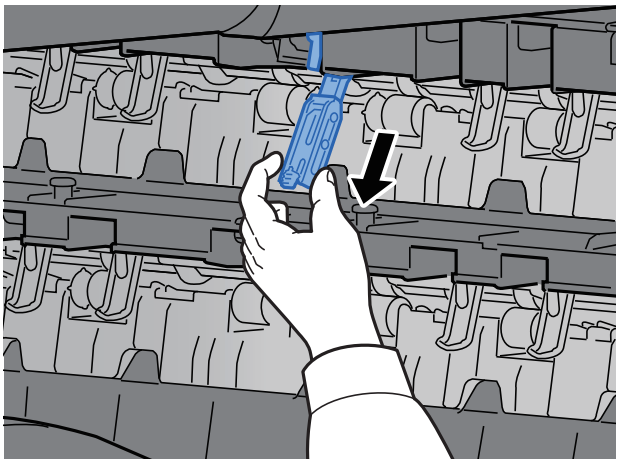

Restoring the Stack Level Adjuster

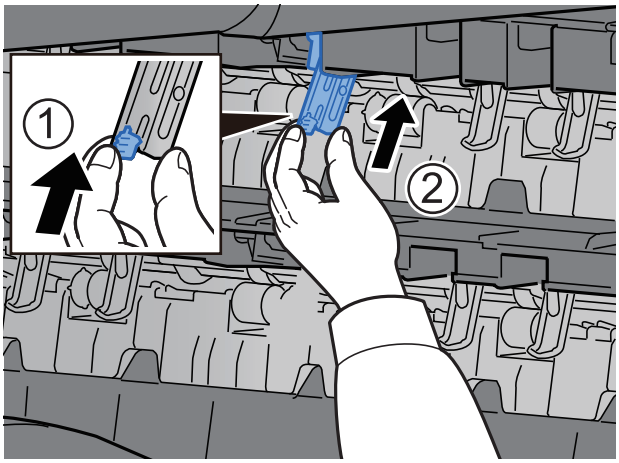

Preparation for Sending a Document to a Shared Folder in a PC

Check the information that needs to be set on the machine and create a folder to receive the document on your computer. Screens of Windows 8.1 are used in the following explanation. The details of the screens will vary in other versions of Windows.

NOTE

Log on to Windows with administrator privileges.

Making a note of the computer name and full computer name

Check the name of the computer name and full computer name.

1 Display the screen.

In Windows 8.1, right-click [**PC**] in the Start screen and select [**Properties**]. Or, right-click the Window icon and select [**System**].

In Windows 8, select the desktop in the Start screen, right-click [**Computer**] from [**Libraries**], and then select [**Properties**].

NOTE

In Windows XP, right-click [**My Computer**] and select [**Properties**]. The [**System Properties**] dialog box appears. Click the [**Computer Name**] tab in the window that appears.

In Windows 7, from [**Start**] button on the Windows, select [**Computer**] and then [**System Properties**].

In Windows 10, right-click [**Start**] button on the Windows and select [**System**].

2 Check the computer name.

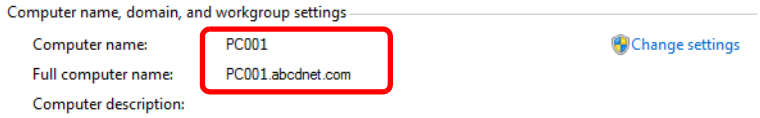

Check the computer name and full computer name.

Screen example:
Computer name: PC001
Full computer name: PC001.abcdnet.com

Windows XP:

If the full computer name does not have a dot (.), the full computer name and the computer name are the same.
If the full computer name has a dot (.), the text string in front of the dot (.) in the full computer name is the computer name.

Example: PC001.abcdnet.com
PC001 is the computer name
PC001.abcdnet.com is the full computer name

After checking the computer name, click the [Close] button to close the "**System Properties**" screen.

In Windows XP, after checking the computer name, click the [**Cancel**] button to close the "**System Properties**" screen.

Making a note of the user name and domain name

Check the domain name and user name for logging onto Windows.

1 Display the screen.

Click [**Search**] in charms, and enter "Command Prompt" in the search box. Select [**Command Prompt**] in the search list.

In Windows 7, from [**Start**] button on the Windows, select [**All Programs**] (or [**Programs**]), [**Accessories**] and then [**Command Prompt**].

In Windows 10, right-click [**Start**] button on the Windows and select [**Command Prompt**].

The Command Prompt window appears.

2 Check the domain name and user name.

At the Command Prompt, enter "net config workstation" and then press [**Enter**].

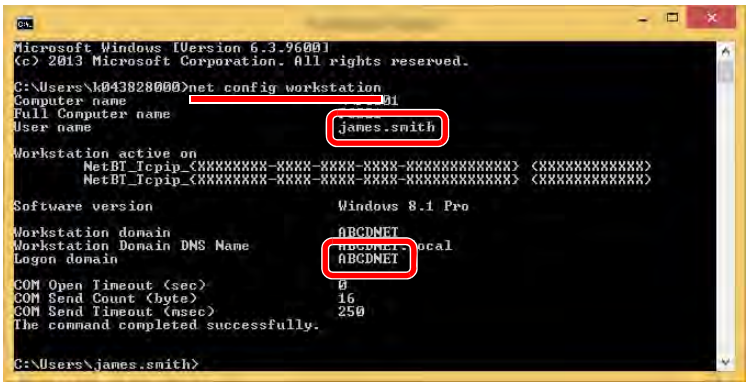

Check the user name and domain name.

Screen example:
User Name: james.smith
Domain Name: ABCDNET

Creating a Shared Folder, Making a Note of a Shared Folder

Create a shared folder to receive the document in the destination computer.

NOTE

If there is a workgroup in System Properties, configure the settings below to limit folder access to a specific user or group.

1 Select [**Settings**] in charms on Desktop, and select [**Control Panel**], [**Appearance and Personalization**], and then [**Folder Options**].

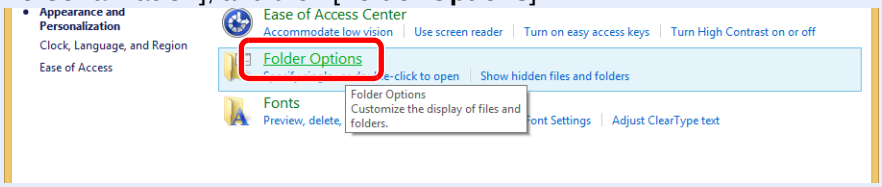

In Windows XP, click [**My Computer**] and select [**Folder Options**] in [**Tools**].

In Windows 7, from [**Start**] button on the Windows, select [**Control Panel**], [**Appearance and Personalization**], and then [**Folder Options**].

In Windows 10, open up a window in File Explorer and select [**View**], [**Options**], and then [**Folder Options**].

2

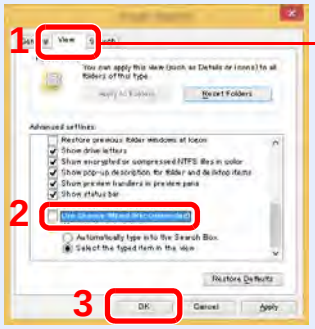

Make sure that the [**View**] tab is selected.

Remove the checkmark from [**Use Sharing Wizard (Recommended)**] in "Advanced settings".

In Windows XP, click the [**View**] tab and remove the checkmark from [**Use Simple File Sharing (Recommended)**] in "Advanced settings".

1 Create a folder.

1 Create a folder on your computer.

For example, create a folder with the name **"scannerdata"** on the desktop.

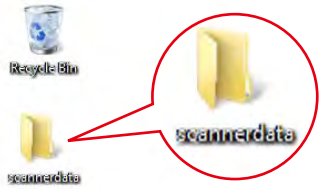

2 Right-click the **"scannerdata"** folder, select [**Property**], and click [**Sharing**] and [**Advanced Sharing**].

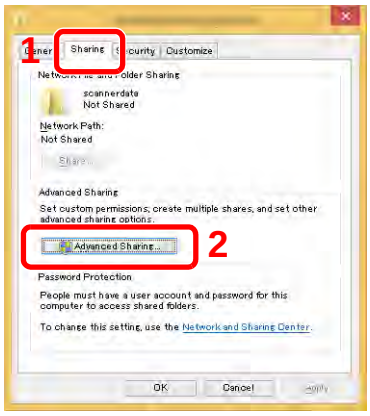

In Windows XP, right-click the "scannerdata" folder and select [**Sharing and Security**] (or [**Sharing**]).

2 Configure permission settings.

1 Select the [**Share this folder**] checkbox and click the [**Permissions**] button.

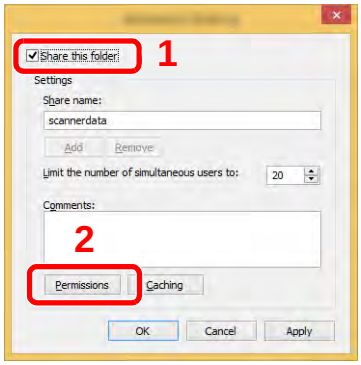

In Windows XP, select [**Share this folder**] and click the [**Permissions**] button.

2 Make a note of the [**Share name**].

3 Click the [**Add**] button.

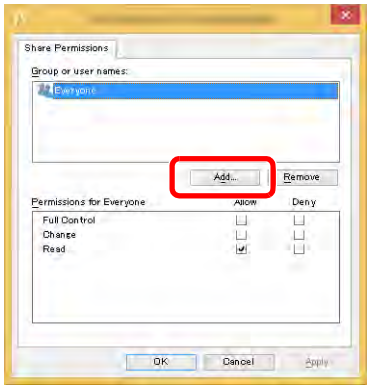

4 Specify the location.

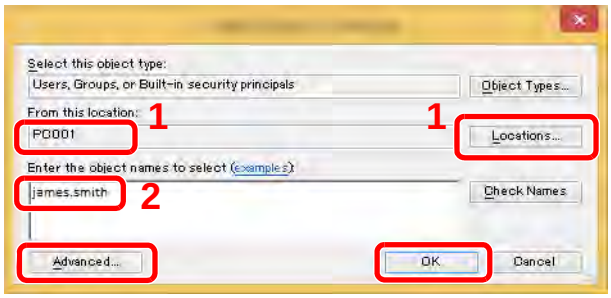

1 If the computer name that you made a note of on page 3-21 is the same as the domain name:
If the computer name is not shown in "From this location", click the [**Locations**] button, select the computer name, and click the [**OK**] button.
Example: PC001
If the computer name that you made a note of on page 3-21 is not the same as the domain name:
If the text after the first dot (.) in the full computer name that you made a note of does not appear in "From this location", click the [**Locations**] button, select the text after the dot (.), and click the [**OK**] button.
Example: abcdnet.com

Making a note of the user name and domain name (page 3-21)

2 Enter the user name that you made a note of on page in the text box, and click the [**OK**] button.
Also the user name can be made by clicking the [**Advanced**] button and selecting a user.

5 Set the access permission for the user selected.

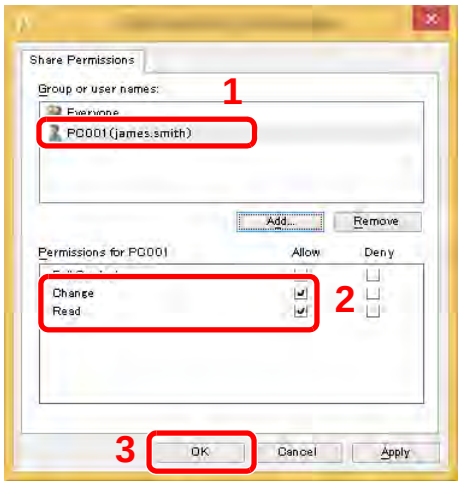

1 Select the user you entered.

2 Select the [**Allow**] checkbox of the "Change" and "Read" permissions

3 Press [**OK**].

In Windows XP, go to step 7.

NOTE

"**Everyone**" gives sharing permission to everyone on the network. To strengthen security, it is recommended that you select "**Everyone**" and remove the "**Read**" [**Allow**] checkmark.

6 Click the [**OK**] button in the "**Advanced Sharing**" screen to close the screen.

7 Check the details set in the [**Security**] tab.

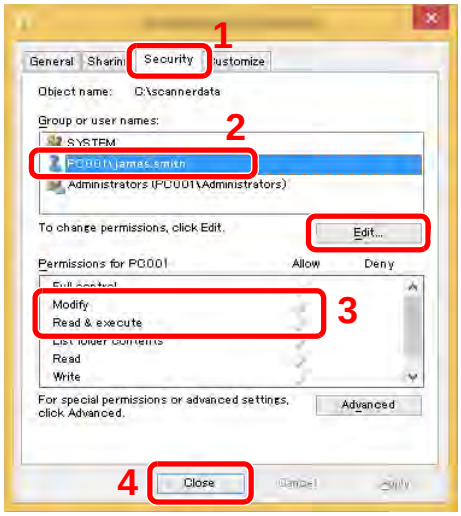

1 Select the [**Security**] tab.

2 Select the user you entered.
If the user does not appear on "Group or user names", click [**Edit**] button to add user in a similar way of "configuration of permission settings".

3 Make sure that checkmarks appear on [**Allow**] checkbox for the "**Modify**" and "**Read & execute**" permissions.

4 Click the [**Close**] button.

In Windows XP, make sure that checkmarks appear on [**Allow**] checkbox for the "**Modify**" and "**Read & execute**" permissions, and click the [**OK**] button.

Configuring Windows Firewall

Permit sharing of files and printers and set the port used for SMB transmission.

NOTE

Log on to Windows with administrator privileges.

1 Check file and printer sharing.

1 In charms on Desktop, click [**Settings**], [**Control Panel**], [**System and Security**], and then [**Windows Firewall**].

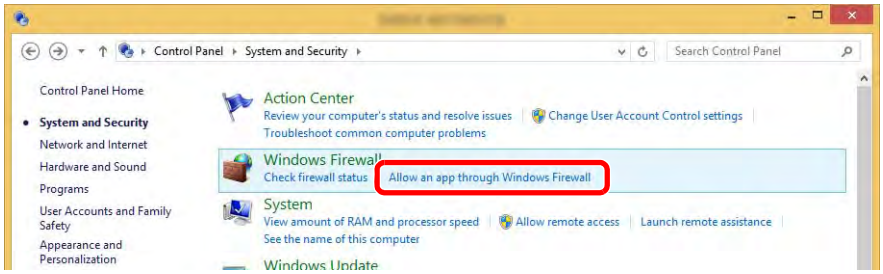

NOTE

If the User Account Control dialog box appears, click the [**Continue**] button.

2 Select the [**File and Printer Sharing**] checkbox.

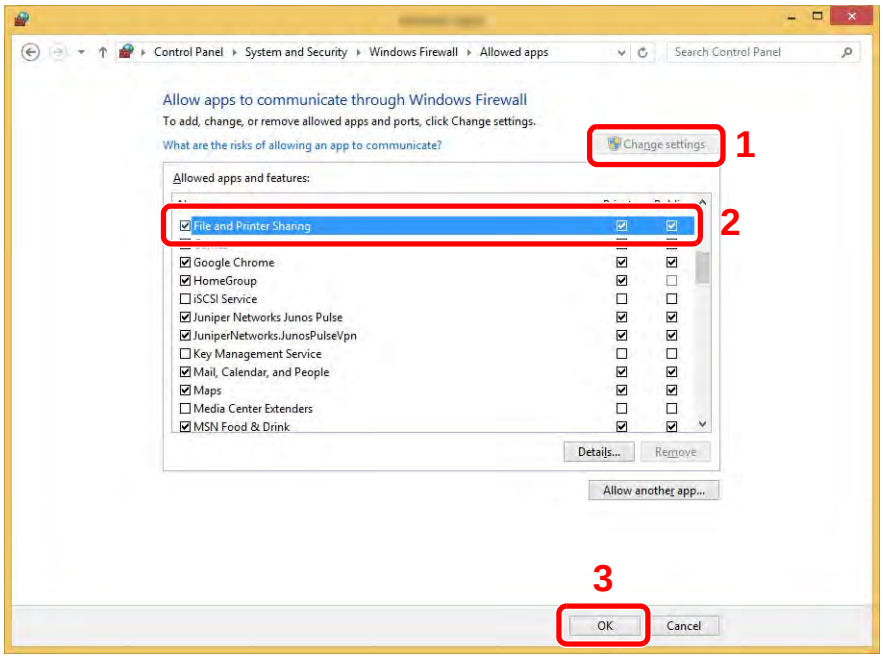

2 Add a port.

1 In charms on Desktop, click [**Settings**], [**Control Panel**], [**System and Security**], and [**Check firewall status**].

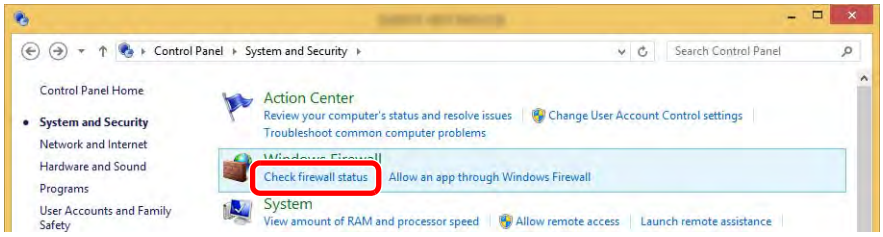

2 Select [**Advanced settings**].

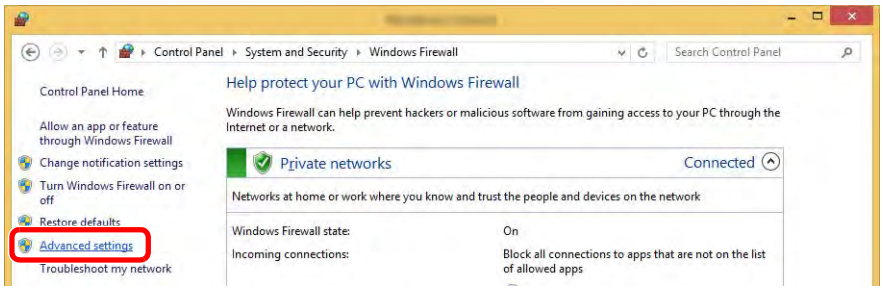

3 Select [**Inbound Rules**].



4 Select [**New Rules**].

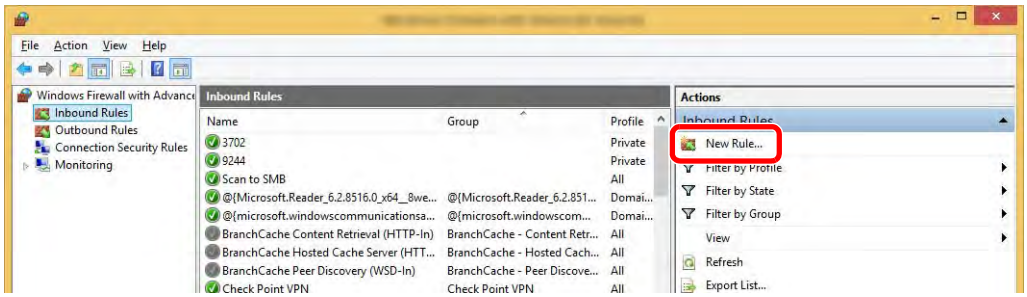

5 Select [**Port**].

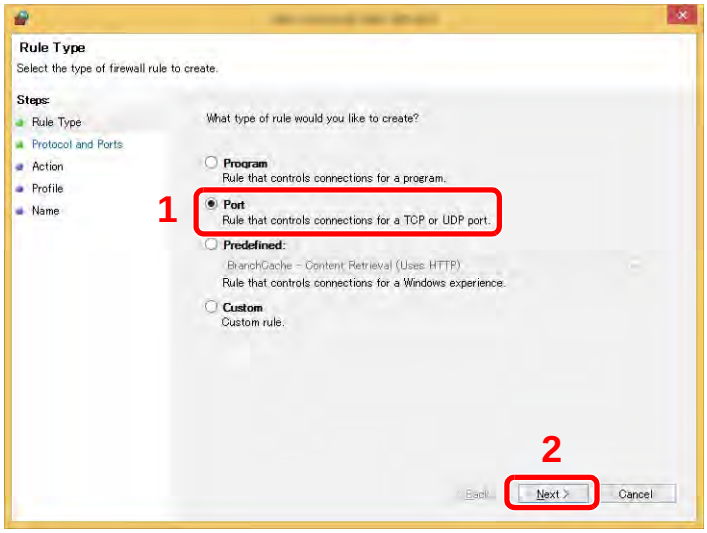

6 Select [**TCP**] as the port to apply the rule to. Then select [**Specific local ports**] and enter "445" then click [**Next**].

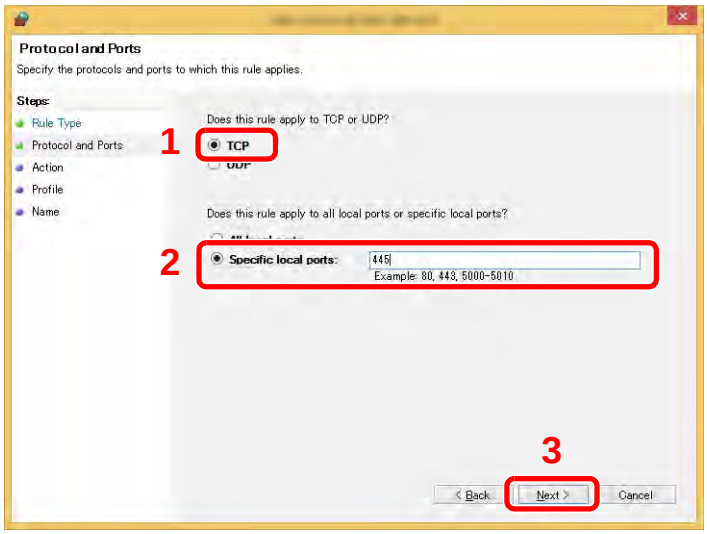

7 Select [**Allow the connection**] and click the [**Next**] button.

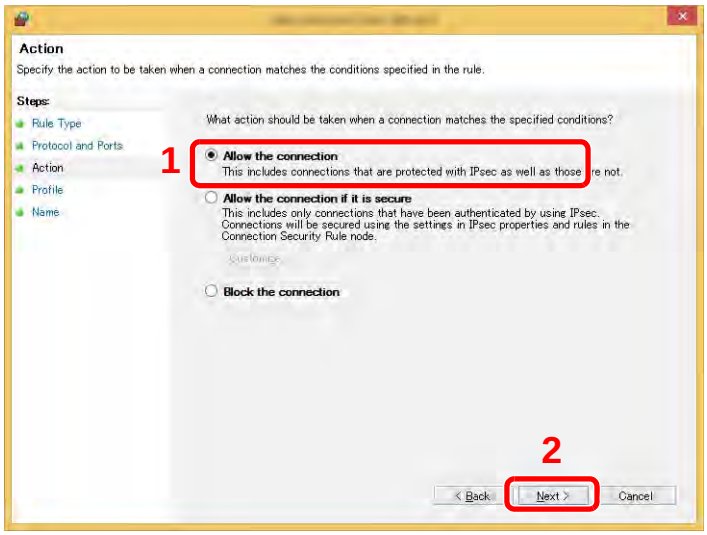

8 Make sure all checkboxes are selected and click the [**Next**] button.

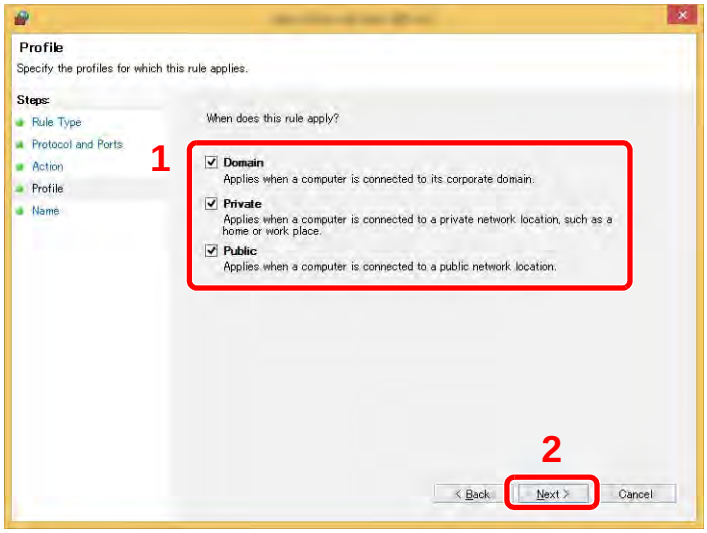

9 Enter **"Scan to SMB"** in "**Name**" and click [**Finish**].

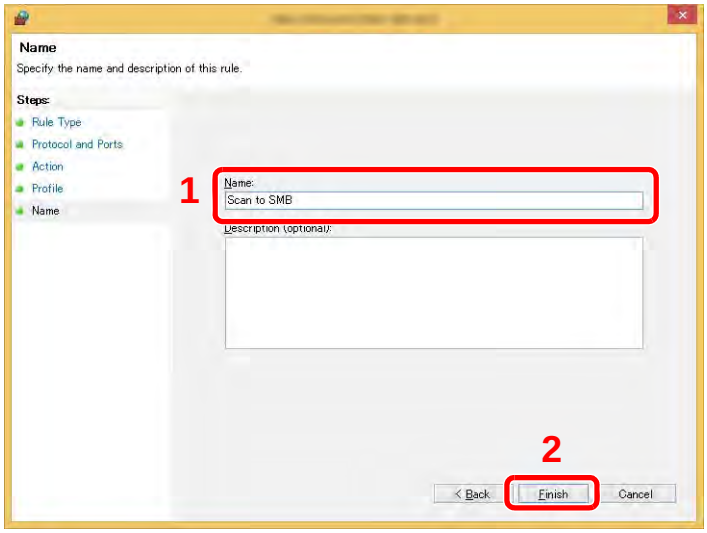

In Windows 7

1. In Windows 7, from [**Start**] button on the Windows, select [**Control Panel**], [**System and Security**], and then [**Allow a program through Windows Firewall**].

   If the User Account Control dialog box appears, click the [**Continue**] button.

2. Configure the settings.

   Configuring Windows Firewall (page 3-25)

In Windows XP or Windows Vista

1. In Windows XP, from [**Start**] button on the Windows, select [**Control Panel**], and then [**Windows Firewall**].

   In Windows Vista, from [**Start**] button on the Windows, select [**Control Panel**], [**Security**], and then [**Turn Windows Firewall on or off**].

   If the User Account Control dialog box appears, click the [**Continue**] button.

2. Click the [**Exceptions**] tab and then the [**Add port...**] button.

3. Specify Add a Port settings.

   Enter any name in "**Name**" (example: Scan to SMB). This will be the name of the new port. Enter "445" in "**Port Number**". Select [**TCP**] for "**Protocol**".

4. Click [**OK**] button.

In Windows 10

1. In Windows 10, right-click [**Start**] button on the Windows and select [**Control Panel**], [**System and Security**], and then [**Allow an app through Windows Firewall**].

   If the User Account Control dialog box appears, click the [**Continue**] button.

2. Configure the settings.

   Configuring Windows Firewall (page 3-25)

Registering Destinations in the Address Book

Save frequently used destinations to the Address Book or One Touch Keys. The saved destinations can be changed. The destinations are available for Send as E-mail, Send to Folder, and Fax Transmission (Only on products with the fax function installed).

NOTE

- Registering and editing of the Address Book can also be done in Command Center RX.
  Registering Destinations (page 2-69)
- Editing of the Address Book and One Touch Keys can be restricted to administrators.
  Edit Restriction (page 8-67)

Adding a Destination (Address Book)

Add a new destination to the Address Book. There are two registering methods, contacts and groups. When adding a group, enter the group name and select group members from the Address Book.

NOTE

If registering and editing of the Address Book is restricted to administrators, you can edit the Address Book by logging in with administrator privileges.

Edit Restriction (page 8-67)

Command Center RX User Guide

Registering a contact address

A maximum of 2,000 contact addresses can be registered. Each address can include the information such as destination name, E-mail address, FTP server folder path, computer folder path, and FAX No. (Only on products with the fax function installed).

1 Display the screen.

[**System Menu/Counter**] key > [**Edit Destination**] > "Address Book" [**Add/Edit**] > [**Add**] > [**Contact**] > [**Next**]

2 Add the name.

1 Select "Address Number" [**Change**].

2 Use [**+**] / [**-**] or the numeric keys to enter an address number (1 to 2500).

To have the number assigned automatically, enter "0000".

NOTE

Address Number is an ID for a destination. You can select any available number out of 2,000 numbers for contacts and 500 numbers for groups.

If you specify an address number that is already in use, an error message appears when you select [**Save**] and the number cannot be registered. If you set "0000" as the address number, the address is registered under the lowest available number.

3 Select [**OK**].

The screen shown in step 1 reappears.

4 Select "Name" [**Change**].

5 Enter the destination name (up to 32 characters) to be displayed on the Address Book and select [**OK**].

The screen shown in step 1 reappears.

NOTE

Refer to the following for details on entering characters.

Character Entry Method (page 11-10)

3 Add the address.

E-mail Address

"E-mail Address" [**Change**] > Enter the E-mail address > [**OK**]

NOTE

Refer to the following for details on entering characters.

Character Entry Method (page 11-10)

The Folder (SMB) Address

"Host Name", "Path", "Login User Name" and "Login Password" [**Change**] > Enter the information > [**OK**]

NOTE

For the computer name, share name, domain name, and user name, enter the information that you noted when you created the shared folder. For details on creating shared folders, refer to the following:

Preparation for Sending a Document to a Shared Folder in a PC (page 3-20)

The table below explains the items to be entered.

Item	Description	Max. No. of Characters
Host Name[*1]	Computer name	Up to 70 characters
Path	Share name For example: scannerdata If saving in a folder in the shared folder: share name\folder name in shared folder	Up to 128 characters
Login User Name[*2]	If the computer name and domain name are the same: User Name For example: james.smith If the computer name and domain name are different: Domain name\User name For example: abcdnet\james.smith	Up to 64 characters
Login Password	Windows logon password **(Case sensitive.)**	Up to 64 characters

*1 You can also specify the port number. Enter the following format separated by a colon.
"Host name: port number" or "IP address: port number"
To enter the IPv6 address, enclose the address in brackets [ ].
(Example: [2001:db8:a0b:12f0::10]:445)
If the port number is not specified in [Host Name], the default port number is 445.

*2 When sending a document through an optional network interface (IB-50 or IB-51), "\" cannot be used. If the computer name is different from the domain name, login user name needs to be input by using "@."
(Example: james.smith@abcdnet)

To search for a folder on a PC on the network, select "Search Folder from Network" or "Search Folder by Host Name" [**Next**].

If you selected "Search Folder from Network" [**Next**], you can enter the "Domain/Workgroup", and "Host Name" to search PCs on the network for the destination.

If you pressed "Search Folder by Host Name"[**Next**], you can search all PCs on the network for a destination.

A maximum of 500 addresses can be displayed. Select the host name (PC name) that you want to specify in the screen that appears, and select [**Next**]. The login user name and login password entry screen appears.

After you enter the login user name and login password name of the destination PC, the shared folders appear. Select the folder that you want to specify and select [**Next**]. The address of the selected shared folder is set.

Select the folder from the Search Results list.

NOTE

- Refer to the following for details on entering characters.
  Character Entry Method (page 11-10)
- Select [**Connection Test**] to check the connection to the server you chose. If the connection fails, check the entries you made.

The Folder (FTP) Address

"Host Name", "Path", "Login User Name" and "Login Password" [**Change**] > Enter the information > [**OK**]

The table below explains the items to be entered.

Item	Descriptions	Max. No. of Characters
Host Name[*1]	Host name or IP address of FTP server	Up to 70 characters
Path[*2]	Path for the file to be stored For example: User\ScanData If no path is entered, the file is stored in the home directory.	Up to 128 characters
Login User Name	FTP server login user name	Up to 64 characters
Login Password	FTP server login password	Up to 64 characters

*1 You can also specify the port number. Enter the following format separated by a colon.
"Host name: port number" or "IP address: port number"
To enter the IPv6 address, enclose the address in brackets [ ].
(Example: [2001:db8:a0b:12f0::10]:21)
If the port number is not specified in [Host Name], the default port number is 21.

*2 When the FTP server is based on Linux/UNIX, the path including the sub-folder is combined by the slash "/" not using the back-slash.

NOTE

- Refer to the following for details on entering characters.
  Character Entry Method (page 11-10)
- Select [**Connection Test**] to check the connection to the FTP server you chose. If the connection fails, check the entries you made.

4 Check if the destination entry is correct > [Save]

The destination is added to the Address Book.

To register the registered address in a one-touch key, select [**Save**] > [**Yes**]

NOTE

Refer to the following for registering the One Touch Key.

Adding a Destination on One Touch Key (One Touch Key) (page 3-37)

Add the group

Compile two or more contacts into a group. Designations in the group can be added at the same time. When adding a group, a maximum of 500 groups can be added in the Address Book.

NOTE

To add a group, you need individually added destinations. Register one or more individual destinations as needed before proceeding. Up to 100 destinations for the E-mail, 500 destinations for the FAX, 100 destinations for the i-FAX, and a total of 10 destinations for the FTP and SMB can be registered per group.

1 Display the screen.

[**System Menu/Counter**] key> [**Edit Destination**] > "Address Book" [**Add/Edit**] > [**Add**] > [**Group**] > [**Next**]

2 Add the name.

1 Select "Address Number" [**Change**].

2 Use [**+**] / [**-**] or the numeric keys to enter an address number (1 to 2,500).

To have the number assigned automatically, set "0000".

NOTE

- Address Number is an ID for a group. You can select any available number out of 2,000 numbers for contacts and 500 numbers for groups.
- If you specify an address number that is already in use, an error message appears when you select [**Save**] and the number cannot be registered. If you set "0000" as the address number, the address is registered under the lowest available number.

3 Select [**OK**]. The "Add Group" screen reappears.

4 Select "Name" [**Change**].

5 Enter the group name displayed on the Address Book > [**OK**]

The "Add Group" screen reappears.

NOTE

Up to 32 characters can be entered.
Refer to the following for details on entering characters.

Character Entry Method (page 11-10)

3 Select the members (destinations).

1 [**Member**] > [**Add**]

2 Select destinations (contacts) to add to the group > [**OK**]

NOTE

Destinations can be sorted or searched by destination name or address number.

Checking and Editing Destinations (page 5-46)

If you have more destinations to add, repeat Steps 2 to 3.

4 Check if the selected destination was added to the group > [Save]

The group is added to the Address Book.

To register the registered address in a one-touch key, select [**Save**] > [**Yes**]

NOTE

Refer to the following for registering the One Touch Key.

Adding a Destination on One Touch Key (One Touch Key) (page 3-37)

Editing Address Book Entries

Edit the destinations (contacts) you added to the Address Book.

1 Display the screen.

1. [**System Menu/Counter**] key > [**Edit Destination**] > "Address Book" [**Add/Edit**]
2. Select a destination or group to edit > [**Detail**]

NOTE

Destinations can be sorted or searched by destination name or address number.

Specifying Destination (page 5-43)

2 Edit the destination.

Editing a Contact

1. Change "Name", "Address Number" and destination type and address.

Adding a Destination (Address Book) (page 3-30)

2. [**Save**] > [**Yes**]

Register the changed destination.

Add a destination to a group

1. Change "Name" and "Address Number".

Add the group (page 3-34)

2. [**Member**] > [**Add**]
3. After you have completed the changes, [**Save**] > [**Yes**]

Register the changed destination.

To delete any destination from the group

1. [**Member**] > Select the delete destination > [**Delete**] > [**Yes**]
2. After you have completed the changes, [**Save**] > [**Yes**]

Register the changed destination.

Deleting Address Book Entries

Delete the destinations (contacts) you added to the Address Book.

1 Display the screen.

1 [**System Menu/Counter**] key> [**Edit Destination**] > "Address Book" [**Add/Edit**]

2 Select a destination or group to delete.

NOTE

Destinations can be sorted or searched by destination name or address number.

Specifying Destination (page 5-43)

2 [Delete] > [Yes]

Delete the contact or group.

Adding a Destination on One Touch Key (One Touch Key)

Assign a new destination (contact or group) to an one touch key. A maximum of 1,000 destinations can be registered.

NOTE

- Refer to the following for use of One Touch Key.
  Specifying Destination (page 5-43)
- You can add One Touch keys and change their settings on Command Center RX.
  Registering Destinations (page 2-69)
- If registering and editing of the One Touch Keys is restricted to administrators, you can edit the One Touch Keys by logging in with administrator privileges.
  Edit Restriction (page 8-67)
  Command Center RX User Guide

1 Display the screen.

[**System Menu/Counter**] key > [**Edit Destination**] > "One Touch Key" [**Add/Edit**]

2 Add One Touch Keys.

1 Select a One Touch Key number (0001 to 1000) for the destination > [**Add/Edit**]
Selecting [**No.**] or the Quick No. Search key on the numeric keypad enables direct entry of a One Touch Key number.

NOTE

For the Quick No. Search key, refer to the following:

Using the Quick No. Search Key (page 2-24)

Select a One Touch Key with no registered destination.

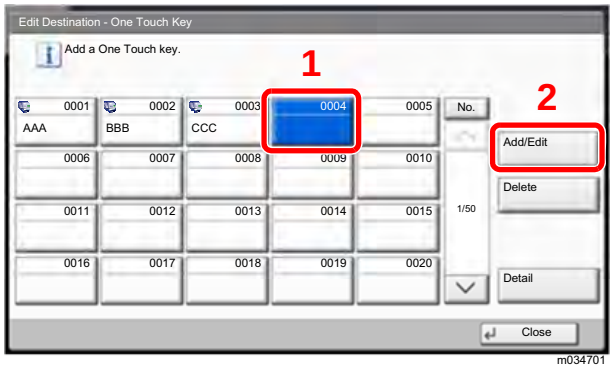

2 Select "Display Name" [**Change**].

3 Enter the One Touch Key name displayed in the send base screen > [**OK**]

NOTE

Up to 24 characters can be entered.
Refer to the following for details on entering characters.

Character Entry Method (page 11-10)

4 Select "Destination" [**Change**].

The Address Book appears.

5 Select a destination (contact or group) to add to the One Touch Key number > [**Next**]

Selecting [**Detail**] shows the detailed information of the selected destination.

NOTE

Destinations can be sorted or searched by destination name or address number.

Specifying Destination (page 5-43)

6 Select [**Save**].

The destination will be added to the One Touch Key.

Editing One Touch Key

1 Display the screen.

1 [**System Menu/Counter**] key > [**Edit Destination**] > "One Touch Key" [**Add/Edit**]

2 Select a One Touch Key number (0001 to 1000) to edit. Selecting [**No.**] or the Quick No. Search key on the numeric keypad enables direct entry of a One Touch Key number.

2 Changing the Registered Information.

1 Select [**Add/Edit**].

2 Select a new destination (contact or group). Selecting [**Detail**] shows the detailed information of the selected destination.

NOTE

Destinations can be sorted or searched by destination name or address number.

Specifying Destination (page 5-43)

3 [**OK**] > [**Save**] > [**Yes**]

Add the destination to the One Touch Key.

Deleting the Destination to the One Touch Key

1 Display the screen.

1 [**System Menu/Counter**] key > [**Edit Destination**] > "One Touch Key" [**Add/Edit**]

2 Select a One Touch Key number (0001 to 1000) to edit. Selecting [**No.**] or the Quick No. Search key on the numeric keypad enables direct entry of a One Touch Key number.

2 Delete the Registered Information.

Select [**Delete**] > [**Yes**]

The data registered in the One Touch Key is deleted.

4 Printing from PC

This chapter explains the following topics:

Printer Driver Properties Screen 4-2
Displaying the Printer Driver Help 4-3
Changing the Default Printer Driver Settings (Windows 8.1) 4-3
Printing from PC 4-4
Printing on Standard Sized Paper 4-4
Printing on Non-standard Sized Paper 4-6
Banner Printing 4-9
Canceling Printing from a Computer 4-15
Printing from the Handheld Device 4-16
Printing by AirPrint 4-16
Printing by Google Cloud Print 4-16
Printing by Mopria 4-16
Printing with Wi-Fi Direct 4-16
Printing with NFC 4-17
Printing Data Saved in the Printer 4-18
Specifying the Job Box from a Computer and Storing the Job 4-18
Printing Documents from Private Print Box 4-19
Deleting the Documents Stored in the Private Print Box 4-19
Printing Document from Stored Job Box 4-20
Deleting the Documents Stored in the Stored Job Box 4-20
Printing Document from Quick Copy Box 4-21
Deleting the Documents Stored in the Quick Copy Box 4-21
Printing Document from Proof and Hold Box 4-22
Deleting the Documents Stored in the Proof and Hold Box 4-22
Monitoring the Printer Status (Status Monitor) 4-23
Accessing the Status Monitor 4-23
Exiting the Status Monitor 4-23
Quick View State 4-23
Printing Progress Tab 4-24
Paper Tray Status Tab 4-24
Toner Status Tab 4-24
Alert Tab 4-25
Status Monitor Context Menu 4-25
Status Monitor Notification Settings 4-26

Printer Driver Properties Screen

The printer driver properties screen allows you to configure a variety of print-related settings.

Printer Driver User Guide

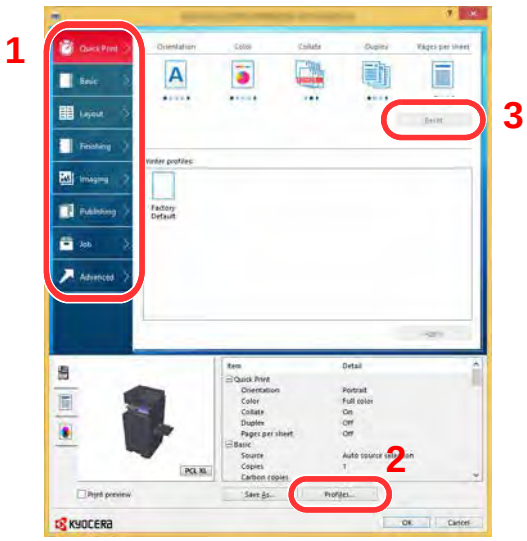

No.	Description
1	**[Quick Print] tab** Provides icons that can be used to easily configure frequently used functions. Each time you click an icon, it changes to an image resembling the print results and applies the settings. 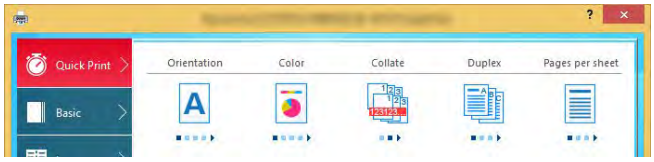 **[Basic] tab** This tab groups basic functions that are frequently used. You can use it to configure the paper size, destination, and duplex printing. **[Layout] tab** This tab lets you configure settings for printing various layouts, including booklet printing, combine mode, poster printing, and scaling. **[Finishing] tab** This tab lets you configure settings related to finishing of printed media, including binding and stapling. **[Imaging] tab** This tab lets you configure settings related to the quality of the print results. **[Publishing] tab** This tab lets you create covers and inserts for print jobs and put inserts between sheets of OHP film. **[Job] tab** This tab lets you configure settings for saving print data from the computer to the machine. Regularly used documents and other data can be saved to the machine for easy printing later. Since saved documents can be printed directly from the machine, this function is also convenient when you wish to print a document that you don't want others to see. **[Advanced] tab** This tab lets you configure settings for adding text pages or watermarks to print data.

No.	Description
2	**[Profiles]** Printer driver settings can be saved as a profile. Saved profiles can be recalled at any time, so it's a convenient practice to save frequently used settings.
3	**[Reset]** Click to revert settings to their initial values.

Displaying the Printer Driver Help

The printer driver includes Help. To learn about print settings, open the printer driver print settings screen and display Help as explained below.

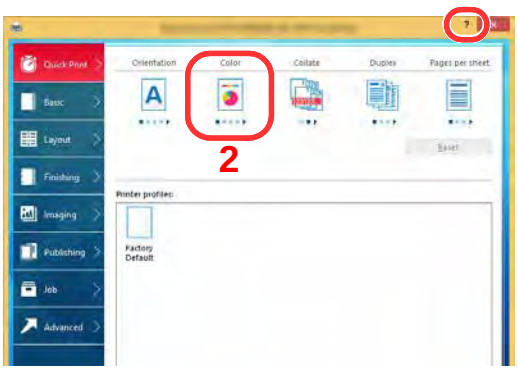

1 Click the [**?**] button in the upper right corner of the screen.

2 Click the item you want to know about.

NOTE

The Help appears, even when you click the item you want to know about and press the [**F1**] key on your keyboard.

Changing the Default Printer Driver Settings (Windows 8.1)

The default printer driver settings can be changed. By selecting frequently used settings, you can omit steps when printing. For the settings, refer to the following:

Printer Driver User Guide

1 In charms on Desktop, click [Settings], [Control Panel], and then [Devices and Printers].

2 Right-click the printer driver icon of the machine, and click the [Printer properties] menu of the printer driver.

3 Click the [Basic] button on the [General] tab.

4 Select the default settings and click the [OK] button.

Printing from PC

This section provides the printing method using the KX DRIVER.

NOTE

- To print the document from applications, install the printer driver on your computer from the supplied DVD (Product Library).
- In some environments, the current settings are displayed at the bottom of the printer driver.

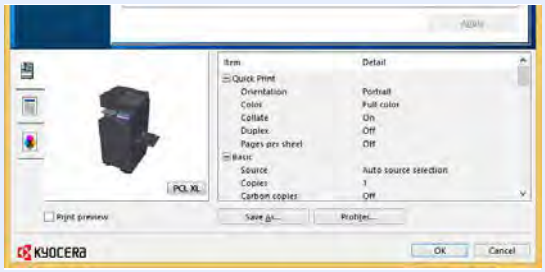

- When printing the cardstock or envelopes, load the cardstock or envelopes in the multi purpose tray before performing the following procedure.

➡ Loading Paper in the Multi Purpose Tray (page 5-7)

Printing on Standard Sized Paper

If you loaded a paper size that is included in the print sizes of the machine, select the paper size in the [**Basic**] tab of the print settings screen of the printer driver.

NOTE

Specify the paper size and media type to print from the operation panel.

➡ Cassette/MP Tray Settings (page 8-7)

1 Display the screen.

Click [**File**] and select [**Print**] in the application.

2 Configure the settings.

1 Select the machine from the "Printer" menu and click the [**Properties**] button.

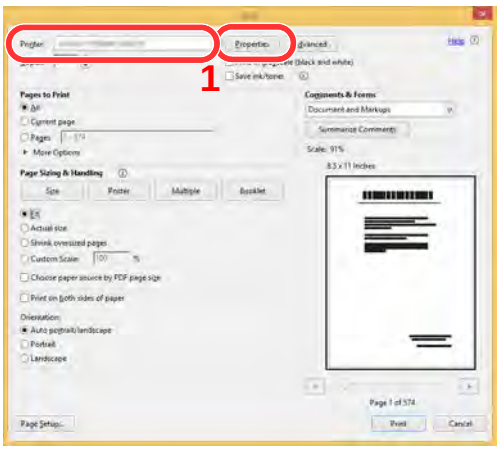

2 Select the [**Basic**] tab.

3 Click "Print size" menu and select the paper size to use for printing.

To load the paper of size that is not included in print sizes of the machine such as cardstock or envelopes, the paper size needs to be registered.

Printing on Non-standard Sized Paper (page 4-6)

To print on the special paper such as thick paper or transparency, click "Media type" menu and select the media type.

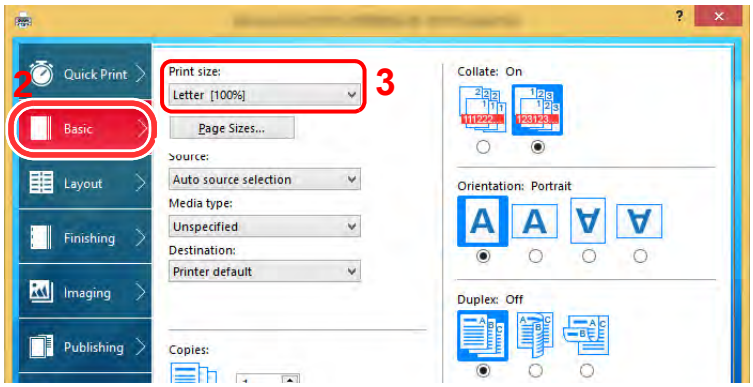

4 Click [**OK**] button to return to the Print dialog box.

3 Start printing.

Click the [**OK**] button.

Printing on Non-standard Sized Paper

If you loaded a paper size that is not included in the print sizes of the machine, register the paper size in the [**Basic**] tab of the print settings screen of the printer driver.

The registered size can be selected from the "Print size" menu.

NOTE

To execute printing at the machine, set the paper size and type in the following:

Original / Paper Settings (page 8-11)

1 Display the screen.

1 In charms on Desktop, click [**Settings**], [**Control Panel**], and then [**Devices and Printers**].

NOTE

In Windows 7, click [**Start**] button on the Windows, and then click [**Devices and Printers**].

2 Right-click the printer driver icon of the machine, and click the [**Printer properties**] menu of the printer driver.

3 Click the [**Basic**] button on the [**General**] tab.

2 Register the paper size.

1 Click the [**Basic**] tab.

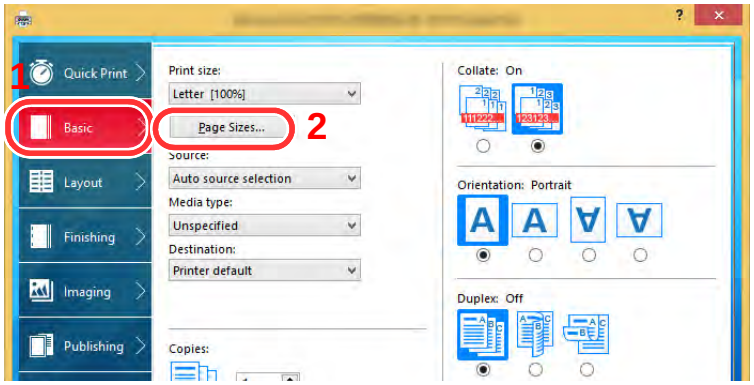

2 Click the [**Page Size...**] button.

3 Click the [**New**] button.

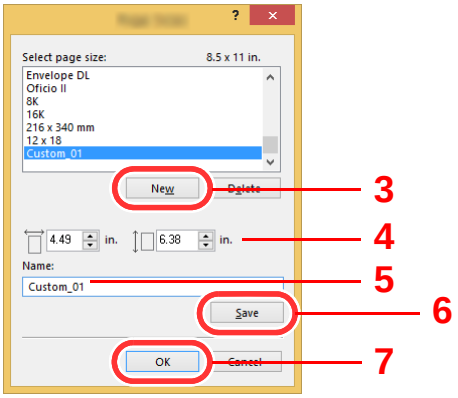

4 Enter the paper size.

5 Enter the name of the paper.

6 Click the [**Save**] button.

7 Click the [**OK**] button.

8 Click the [**OK**] button.

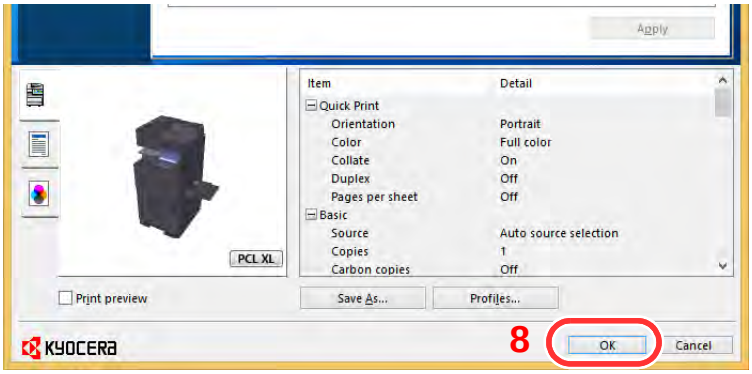

3 Display the print settings screen.

Click [**File**] and select [**Print**] in the application.

4 Select the paper size and type of non-standard size paper.

1 Select the machine from the "Printer" menu and click the [**Properties**] button.

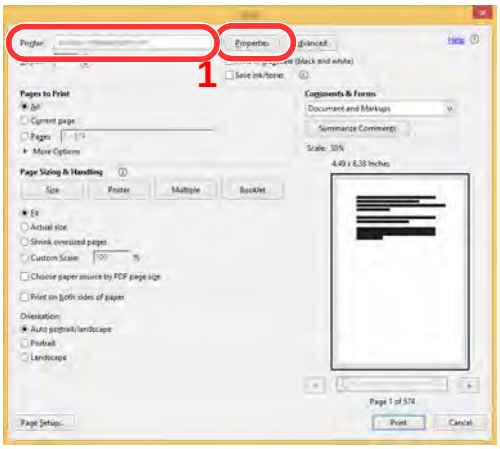

2 Select the [**Basic**] tab.

3 Click "Print size" menu and select the paper size registered in step 2.

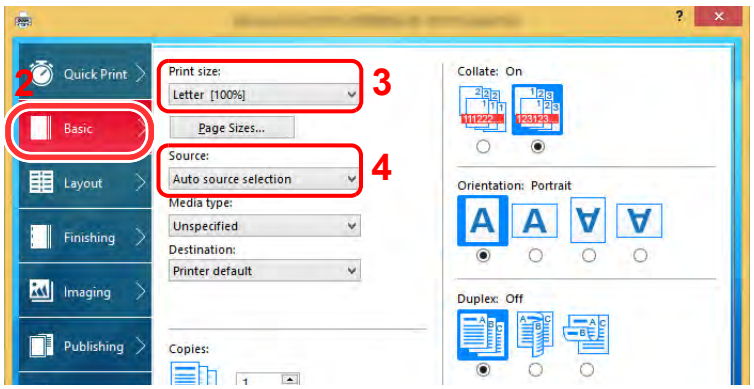

To print on the special paper such as thick paper or transparency, click "Media type" menu and select the media type.

NOTE

If you loaded a postcard or envelope, select [**Cardstock**] or [**Envelope**] in the "Media type" menu.

4 Select the paper source in the "Source" menu.

5 Click [**OK**] button to return to the Print dialog box.

5 Start printing.

Click the [**OK**] button.

Banner Printing

When a document length from 470.1 mm (18.5") to a maximum of 1,220.0 mm (48") is specified for printing, the print job is treated as banner printing.

Max. number of sheets	1 sheet (manual feed), 10 sheets (when optional banner tray is attached*1)
Paper width	210 mm to 304.8 mm (8.26" to 12")
Paper length	470.1 mm to 1,220 mm (18.5" to 48")
Paper weight	136 to 163 g/m^2
Media type	Heavy 2

*1 When the banner tray (option) is used, up to 10 sheets of banner paper can be fed continuously For details, refer to the follows:
➡ Using the Banner Tray (Option) (page 4-12)

Using the Multi Purpose Tray

1 Display the screen.

Click [**File**] and select [**Print**] in the application.

2 Configure the settings.

1 Select the machine from the "Printer" menu and click the [**Properties**] button.

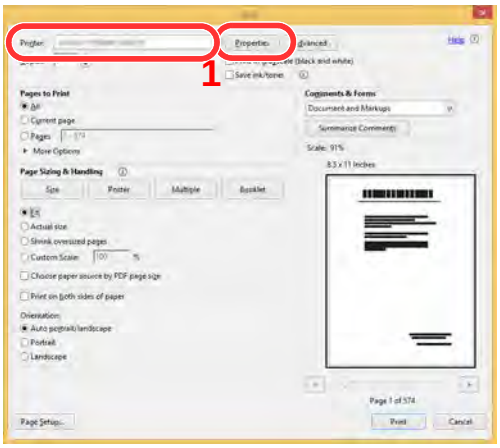

2 Select the [**Basic**] tab.

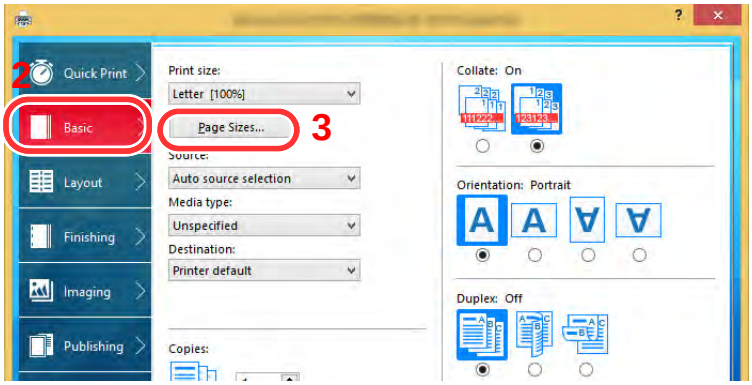

3 Click the [**Page Size...**] button.

3 Register the paper size.

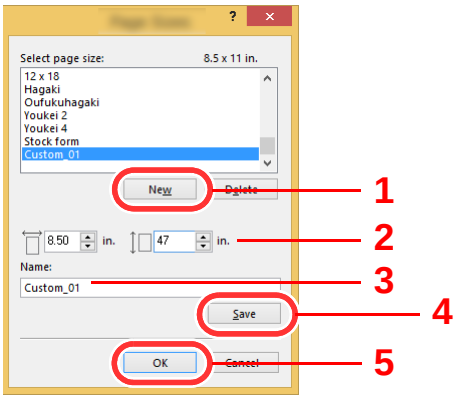

1 Click the [**New**] button.

2 Enter the length (470.1 mm (18.51") or longer), and width of the custom paper size being registered.

3 Enter the name of the paper.

4 Click the [**Save**] button.

5 Click the [**OK**] button.

4 Configure the print paper size.

1 Click "Print size" menu and select the paper size registered in step 3.

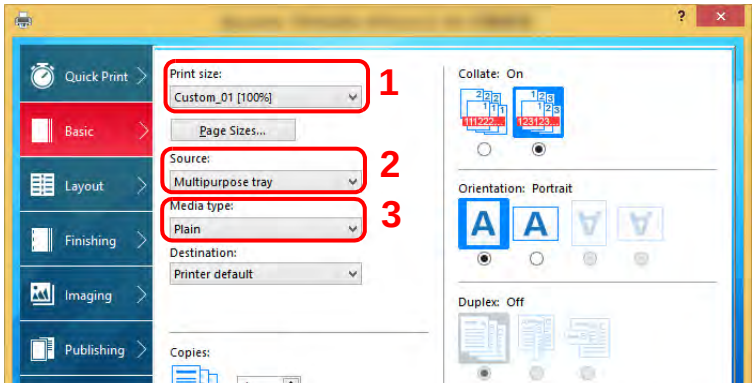

2 Click "Source" menu and select [**Multipurpose tray**].

3 Click "Media type" menu and select [**Plain**].

4 Click the [**OK**] button.

NOTE

When banner printing, a resolution of 600 dpi is set.

5 Start printing.

Click the [**OK**] button.

When you execute printing in this case, a message appears on the machine's operation panel. Place the paper in the Multi Purpose tray, continue to support it so that it does not fall, and select [**Continue**]. To cancel printing, select [**Cancel**].

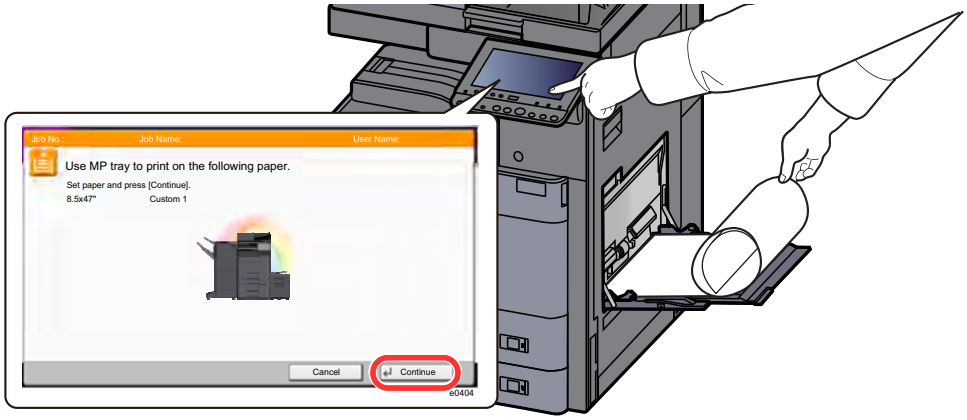

IMPORTANT

- **If an output tray that cannot be used for banner printing such as Mailbox (option) is selected in the printer driver, the output tray automatically changes to a tray that can be used.**
- **After pressing [Continue], support the paper with both hands so that it feeds in correctly.**

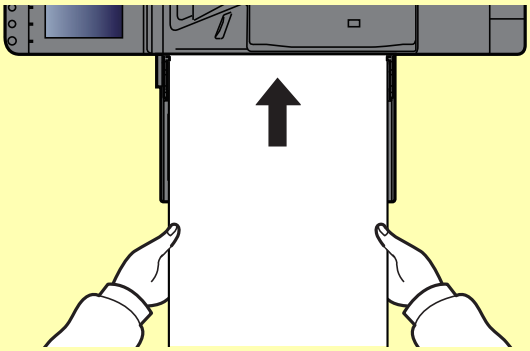

- **After printing starts, catch the paper when it is output so that it does not fall. When using the inner tray as the output location, do not stand up the stopper.**

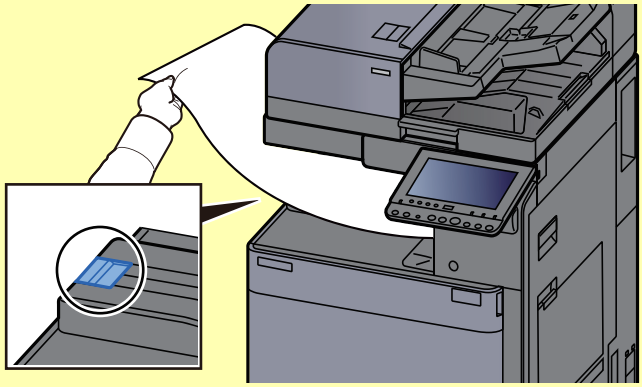

Set whether the confirmation screen appears before each sheet is printed when printing multiple banner sheets.

Message Banner Print (page 8-30)

Using the Banner Tray (Option)

When the banner tray (option) is used, up to 10 sheets of banner paper can be fed continuously.

The operation procedure for setting the banner paper by using the printer driver is the same as that of using the multi purpose tray.

Using the Multi Purpose Tray (page 4-9)

NOTE

The paper length supported in banner tray is 470.1 mm to 1,220 mm (18.5" to 48").

1 Open the multi purpose tray.

Open the multi purpose tray until it stops.

Do not extend the multi purpose auxiliary tray.

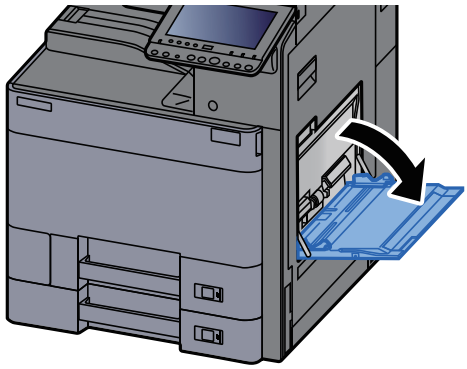

2 Attach the banner tray.

1 Release the paper width guide lock on the banner tray and open to the maximum width.

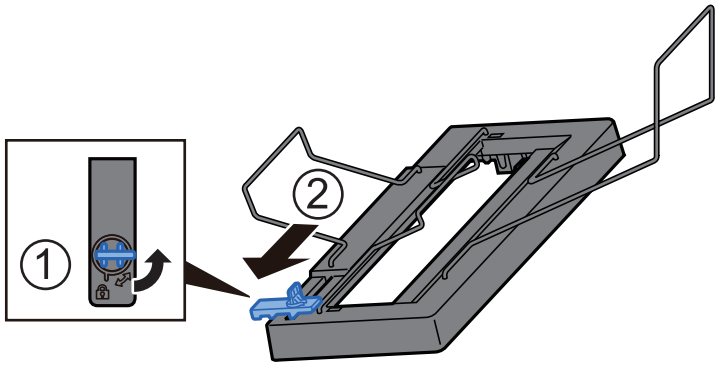

2 Attach the banner tray to the multi purpose tray.

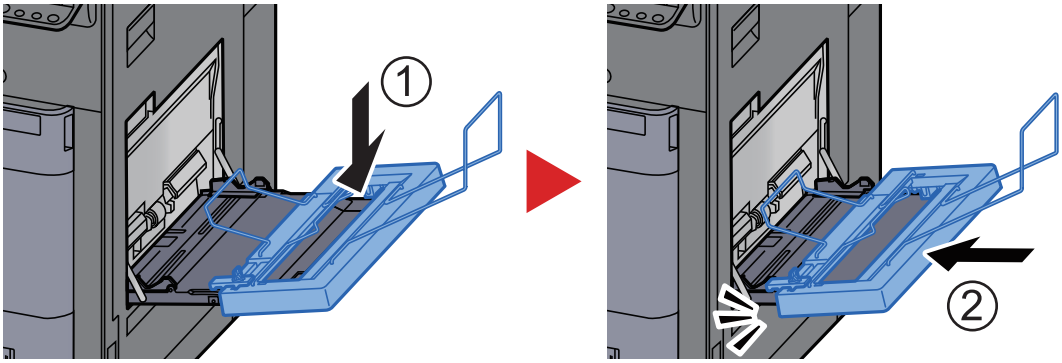

3 Load paper.

1 Open the paper width guides on the multi purpose tray to the maximum width.

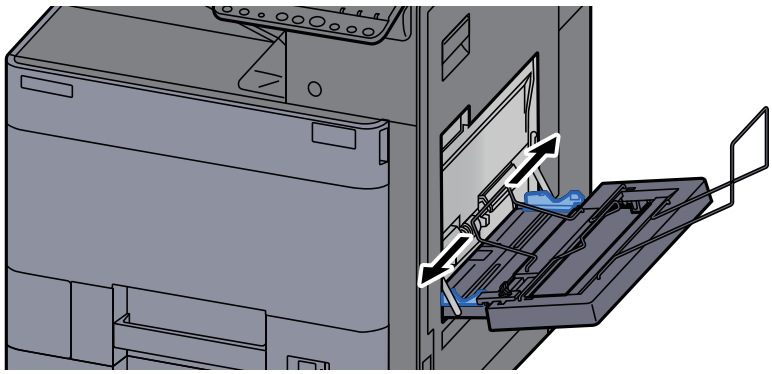

Make sure that the banner tray is attached so that the paper width guides on the banner tray are outside the paper width guides on the multi purpose tray.

2 Load banner paper so that it passes under the paper clamp bar.

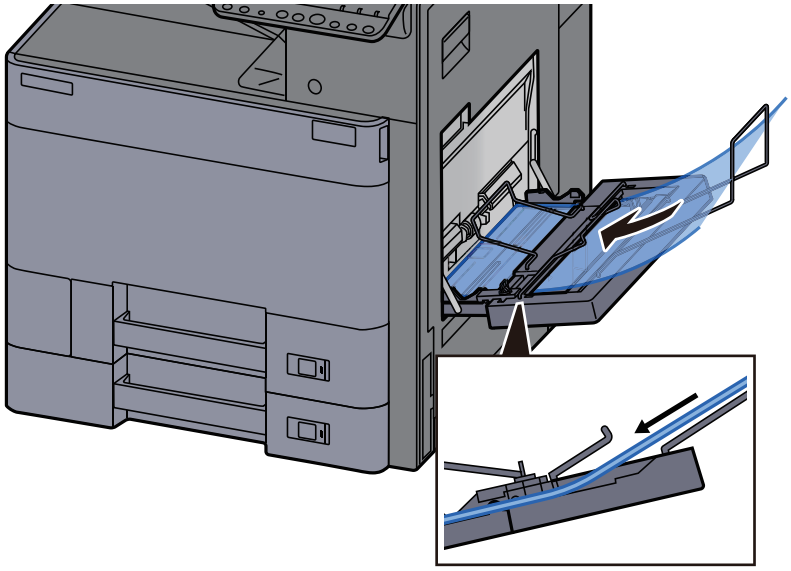

3 Loop the banner paper back and place the end on the paper support.

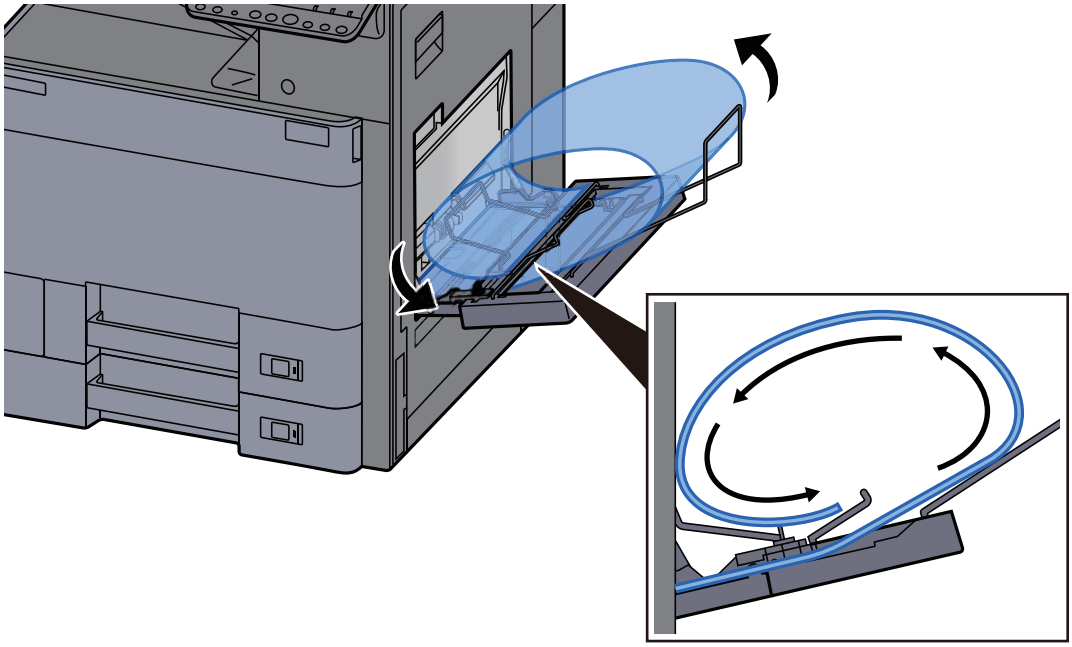

4 Adjust the paper width guides to the width of the paper.

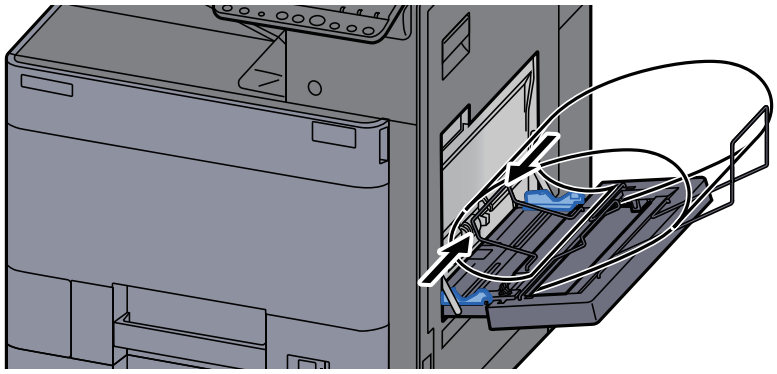

IMPORTANT

If there is a gap between the paper and the paper width guides, readjust the guides to fit the paper in order to prevent skewed feeding and paper jams.

5 Adjust the paper width guides on the banner tray to the same width as the paper width guides on the multi purpose tray and lock.

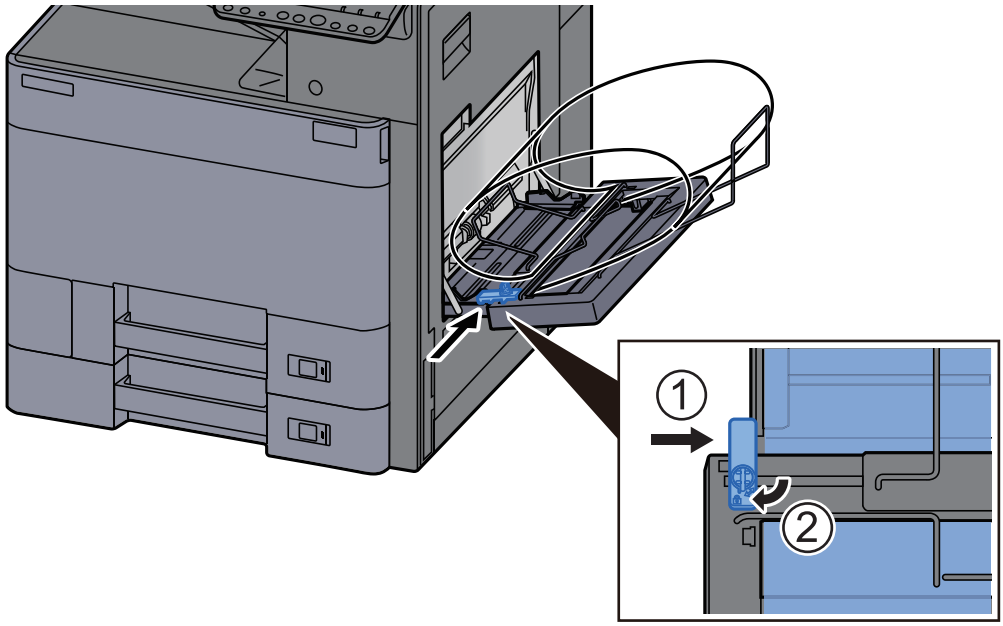

IMPORTANT

Remove the paper when banner printing finishes, or when you are not using the banner tray.

NOTE

The print confirmation screen can be set in System Menu to not appear when the banner tray is attached. This will allow continuous printing on multiple sheets. Refer to the follows:

Message Banner Print (page 8-30)

Canceling Printing from a Computer

To cancel a print job executed using the printer driver before the printer begins printing, do the following:

NOTE

When canceling printing from this machine, refer to the following:

Canceling Jobs (page 5-23)

1 Double-click the printer icon ( ) displayed on the taskbar at the bottom right of the Windows desktop to display a dialog box for the printer.

2 Click the file for which you wish to cancel printing and select [Cancel] from the "Document" menu.

Printing from the Handheld Device

This machine supports the AirPrint, Google Cloud Print and Mopria. According to the supported OS and application, you can print the job from any handheld device or computer without installing a printer driver.

Printing by AirPrint

AirPrint is a printing function that is included standard in iOS 4.2 and later products, and Mac OS X 10.7 and later products.

To use the AirPrint, make sure that the AirPrint setting is enabled in the Command Center RX.

Command Center RX User Guide



Printing by Google Cloud Print

Google Cloud Print is a printing service provided by Google. This service enables a user with a Google account to print from a machine connected to the Internet.

The machine can be configured in the Command Center RX.

Command Center RX User Guide

NOTE

A Google account is necessary to use Google Cloud Print. Obtain a Google account if you do not have one.

It is also necessary to register the machine with the Google Cloud Print service in advance. The machine can be registered from a PC connected to the same network.

Printing by Mopria

Mopria is a standard on printing function included in Android 4.4 or later products.

Mopria Print Service needs to be installed and enabled in advance.

For details on how to use, refer to a Web site of Mopria Alliance.

Printing with Wi-Fi Direct

Wi-Fi Direct is a wireless LAN standard that Wi-Fi Alliance has been established. This is one of the functions of the wireless LAN, without a wireless LAN access point or wireless LAN router, between devices can communicate directly on a peer to peer basis.

The printing procedure by the Wi-Fi Direct is the same as that from the normal handheld devices.

When you use a printer name or Bonjour name on the port settings of the printer property, you can print the job by specifying the name at Wi-Fi Direct connection.

When you use an IP address for the port, specify the IP address of this machine.

Printing with NFC

When the Wi-Fi and Wi-Fi Direct has been configured in advance, the network between this machine and handheld device will be configured by simply tapping an NFC tag.

- Configuring the Wireless Network (page 2-32)
- Setting Wi-Fi Direct (page 2-36)

Printing Data Saved in the Printer

You can save the print job into the Job Box of this device and print it as necessary.

If you configure settings in the [**Job**] tab of the printer driver and then print, the print job will be saved in the Job Box (memory) and printing can be executed at the machine.

Follow the work flow below when using Job Box.

Specifying the Job Box from a computer and sending the print job. (page 4-18)

▼

Using the operation panel to specify a file within a Box and printing it.

You can print the documents from the following boxes.

- Printing Documents from Private Print Box (page 4-19)
- Printing Document from Stored Job Box (page 4-20)
- Printing Document from Quick Copy Box (page 4-21)
- Printing Document from Proof and Hold Box (page 4-22)

Specifying the Job Box from a Computer and Storing the Job

1 Click [File] and select [Print] in the application.

The Print dialog box displays.

2 Select the machine from the "Name" menu.

3 Click the [Properties] button.

The Properties dialog box displays.

4 Click the [Job] tab and select the [Job storage (e-MPS)] check box to set the function.

NOTE

For information on how to use the printer driver software, refer to the following:

- **Printer Driver User Guide**

Printing Documents from Private Print Box

In Private Printing, you can specify that a job is not to be printed until you operate the machine. When sending the job from the application software, specify a 4-digit access code in the printer driver. The job is released for printing by entering the access code on the operation panel, ensuring confidentiality of the print job. The data will be deleted upon completion of the print job or after the power switch is turned off.

1 Display the screen.

1 [**Home**] key > [**Job Box**]

2 [**Private Print/Stored Job**] > [**Open**]

3 Select the creator of the document > [**Open**]

2 Print the document.

1 Select the document to print > [**Print**]

2 Enter the access code.

3 Specify the number of copies to print as desired.

4 Select [**Start Print**].

Printing starts.
Upon completion of printing, the Private Print job is automatically deleted.

Deleting the Documents Stored in the Private Print Box

1 Display the screen.

1 [**Home**] key > [**Job Box**]

2 [**Private Print/Stored Job**] > [**Open**]

3 Select the creator of the document > [**Open**]

2 Delete the document.

Select the document to delete > [**Delete**] > Enter the access code

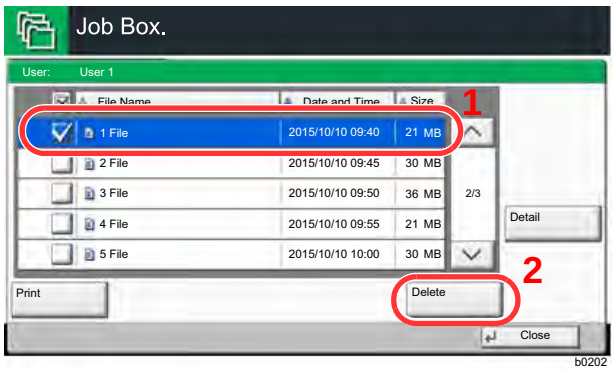

The document is deleted.

Printing Document from Stored Job Box

In Stored Job, the print data sent from the application is saved to the machine. You can set up an access code as necessary. If you set up an access code, enter the access code when printing. Print data will be stored in the Stored Job Box after printing. This will allow printing of the same print data repeatedly.

1 Display the screen.

1. [**Home**] key > [**Job Box**]
2. [**Private Print/Stored Job**] > [**Open**]
3. Select the creator of the document > [**Open**]

2 Print the document.

1. Select the document to print > [**Print**]
2. Specify the number of copies to print as desired.
3. Select [**Start Print**].

   Printing starts.

> **NOTE**
> If the document is protected by an access code, the password entry screen will be displayed. Enter the password using the numeric keys.

Deleting the Documents Stored in the Stored Job Box

1 Display the screen.

1. [**Home**] key > [**Job Box**]
2. [**Private Print/Stored Job**] > [**Open**]
3. Select the creator of the document > [**Open**]

2 Delete the document.

1. Select the document to delete > [**Delete**]
2. If the document is protected by an access code, enter the code.

   The document is deleted.

Printing Document from Quick Copy Box

Quick Copy feature facilitates additional prints of a document already printed. Activating Quick Copy and printing a document using the printer driver allow the print data to be stored in the Quick Copy Job Box. When additional copies are required, you can reprint the required number of copies from the touch panel. By default, up to 32 documents can be stored. When power is turned off, all stored jobs will be deleted.

NOTE

- When the number of jobs reaches the limit, the oldest job will be overwritten by the new one.
- To maintain free space on the box, you can set the maximum number of stored jobs.

Quick Copy Job Retention (page 8-39)

1 Display the screen.

1 [**Home**] key > [**Job Box**]

2 [**Quick Copy/Proof and Hold**] > [**Open**]

3 Select the creator of the document > [**Open**]

2 Print the document.

1 Select the document to print > [**Print**]

2 Specify the number of copies to print as desired.

3 Select [**Start Print**].

Printing starts.

Deleting the Documents Stored in the Quick Copy Box

1 Display the screen.

1 [**Home**] key > [**Job Box**]

2 [**Quick Copy/Proof and Hold**] > [**Open**]

3 Select the creator of the document > [**Open**]

2 Delete the document.

Select the document to delete > [**Delete**] > [**Yes**]

The document is deleted.

Printing Document from Proof and Hold Box

The Proof and Hold feature produces only a single proof print of multiple-print job and holds printing of the remaining copies. Printing a multiple-print job in Proof and Hold using the printer driver allows only a single copy to be printed while maintaining the document data in the Job Box. To continue to print the remaining copies, use the touch panel. You can change the number of copies to print.

1 Display the screen.

1. [**Home**] key > [**Job Box**]
2. [**Quick Copy/Proof and Hold**] > [**Open**]
3. Select the creator of the document > [**Open**]

2 Print the document.

1. Select the document to print > [**Print**]
2. Specify the number of copies to print as desired.
3. Select [**Start Print**].

   Printing starts.

Deleting the Documents Stored in the Proof and Hold Box

1 Display the screen.

1. [**Home**] key > [**Job Box**]
2. [**Quick Copy/Proof and Hold**] > [**Open**]
3. Select the creator of the document > [**Open**]

2 Delete the document.

Select the document to delete > [**Delete**] > [**Yes**]

The document is deleted.

Monitoring the Printer Status (Status Monitor)

The Status Monitor monitors the printer status and provides an ongoing reporting function.

NOTE

When you activate Status Monitor, check the status below.

- KX DRIVER is installed.
- Either [**Enhanced WSD**] or [**Enhanced WSD(SSL)**] is enabled.

Network (page 8-48)

Accessing the Status Monitor

The Status Monitor also starts up when printing is started.

Exiting the Status Monitor

Use either of the methods listed below to exit the Status Monitor.

- Exit manually:
  Click the settings icon and select Exit in the menu to exit the Status Monitor.
- Exit automatically:
  The Status Monitor automatically shuts down after 7 minutes if it is not being used.

Quick View State

The status of the printer is displayed using icons. Detailed information is displayed when the Expand button is clicked.

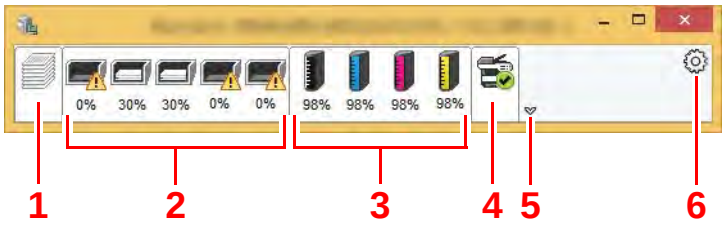

1 Printing progress tab
2 Paper tray status tab
3 Toner status tab
4 Alert tab
5 Expand button
6 Settings icon

Detailed information is displayed by clicking on each icon tab.

Printing Progress Tab

The status of the print jobs is displayed.

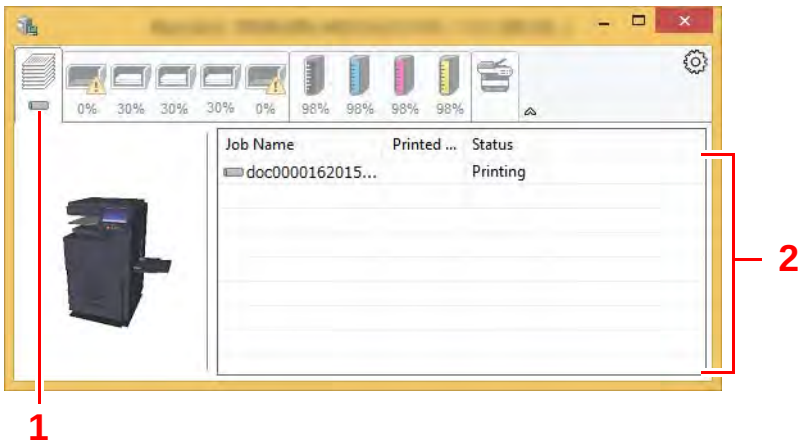

1 Status icon

2 Job list

Select a job on the job list and it can be canceled using the menu displayed with a right-click.

Paper Tray Status Tab

Information is displayed about the paper in the printer and about the amount of paper remaining.

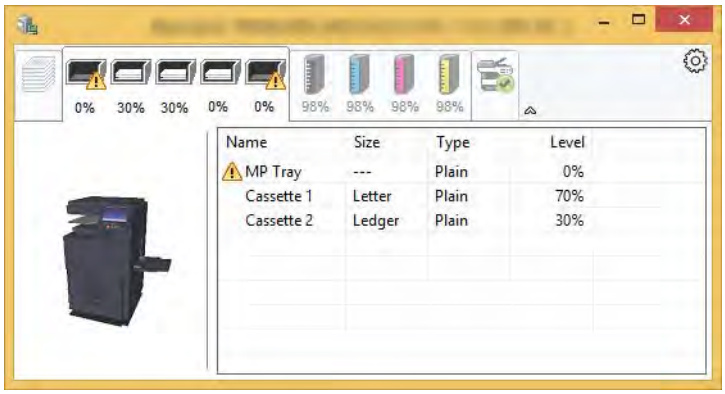

Toner Status Tab

The amount of toner remaining is displayed.

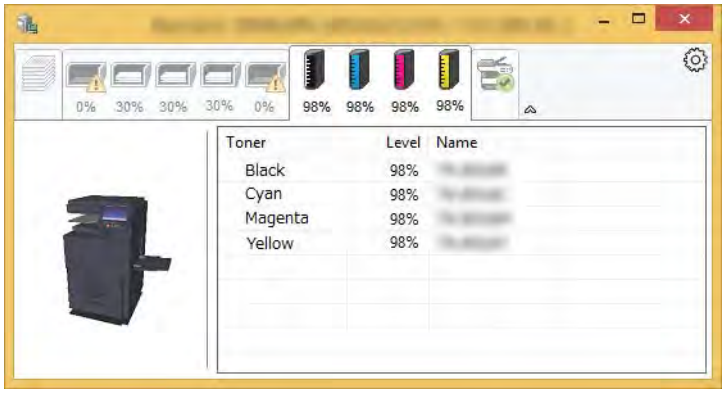

Alert Tab

If an error occurs, a notice is displayed using a 3D image and a message.

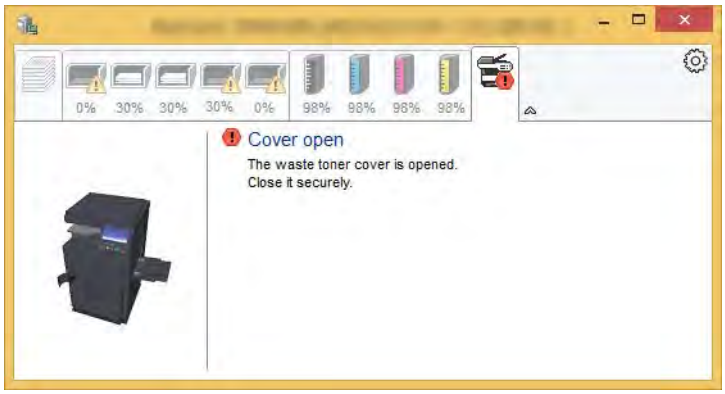

Status Monitor Context Menu

The following menu is displayed when the settings icon is clicked.

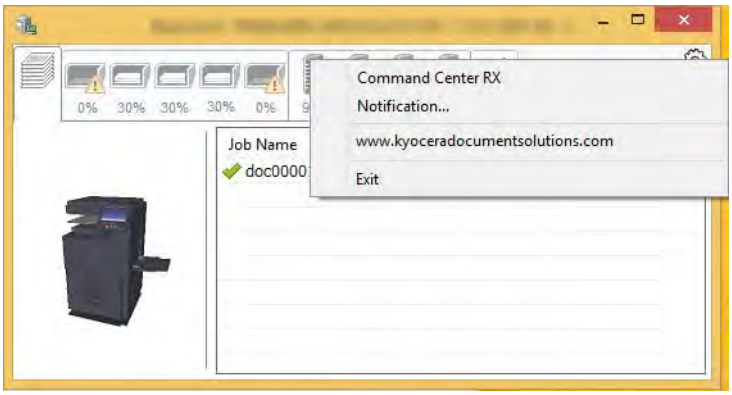

- **Command Center RX**
  If the printer is connected to a TCP/IP network and has its own IP address, use a web browser to access the Command Center RX to modify or confirm the network settings. This menu is not displayed when using USB connection.
  ➔ **Command Center RX User Guide**
- **Notification…**
  This sets the display of the Status Monitor.
  ➔ Status Monitor Notification Settings (page 4-26)
- **www.kyoceradocumentsolutions.com**
  Open our website.
- **Exit**
  Exits the Status Monitor.

Status Monitor Notification Settings

The Status Monitor settings and event list details are displayed.

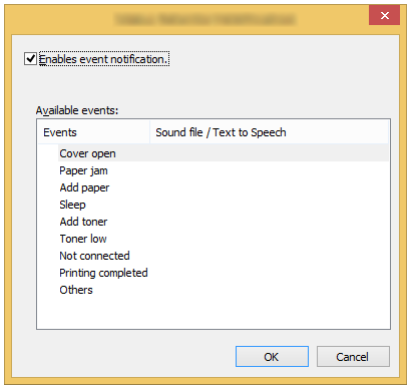

Select whether notification is performed when an error in the event list occurs.

1 Select Enable event notification.

If this setting is set to Off, then the Status Monitor will not start up even when printing is executed.

2 Select an event to use with the text to speech function in Available events.

3 Click Sound file / Text to Speech column.

Click the browse (...) button to notify the event by sound file.

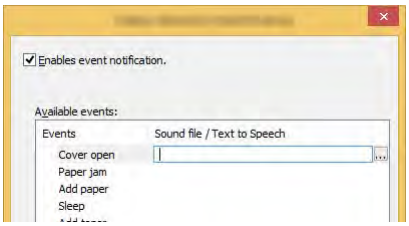

NOTE

The available file format is WAV.

When customizing the message texts to read on the screen aloud, enter the texts in the text box.

5 Operation on the Machine

This chapter explains the following topics:

Loading Originals 5-2
Placing Originals on the Platen 5-2
Loading Originals in the Document Processor 5-4
Loading Paper in the Multi Purpose Tray 5-7
Program 5-11
Registering Programs 5-12
Recalling Programs 5-12
Editing Programs 5-13
Deleting Programs 5-13
Application 5-14
Installing Applications 5-14
Activating Applications 5-15
Deactivating Applications 5-16
Uninstalling Applications 5-17
Registering Shortcuts (Copy, Send, and Document Box Settings) 5-18
Adding Shortcuts 5-18
Editing Shortcuts 5-19
Deleting Shortcuts 5-19
Copying 5-20
Basic Operation 5-20
Proof Copy 5-22
Interrupt Copy 5-23
Canceling Jobs 5-23
Frequently-Used Sending Method 5-24
Sending Document via E-mail 5-25
Configuring Settings before Sending .. 5-25
Sending Scanned Document via E-mail 5-25
Sending Document to Desired Shared Folder on a Computer (Scan to PC) 5-26
Configuring Settings before Sending .. 5-26
Sending Document to Desired Shared Folder on a Computer 5-26
Sending Document to Folder on an FTP Server (Scan to FTP) 5-29
Configuring Settings before Sending .. 5-29
Sending Document to Folder on an FTP Server 5-29
Scanning using TWAIN or WIA 5-31
Configuring Settings before Sending 5-31
Scanning Document Using Application 5-31
Scanning Document stored in a Custom Box ... 5-32
Configuring Settings before Sending 5-32
Scanning Document Stored in a Box 5-32
Useful Sending Method 5-33
WSD Scan 5-34
Installing the Driver 5-34
Executing WSD scan 5-35
DSM Scan 5-37
Configuring Settings before Sending 5-37
Executing DSM Scan 5-37
Scanning with File Management Utility 5-39
Configuring Settings before Sending 5-39
Using FMU Connection to Scan an Original 5-39
Sending to Different Types of Destinations (Multi Sending) 5-40
Send to Me (E-mail) 5-41
Configuring Settings before Sending ... 5-41
Sending a Document to the Mail Address of the Logged In User 5-41
Canceling Sending Jobs 5-42
Handling Destination 5-43
Specifying Destination 5-43
Choosing from the Address Book 5-43
Choosing from the One Touch Key ... 5-45
Choosing from the Speed Dial 5-45
Checking and Editing Destinations ... 5-46
Confirmation Screen of Destinations 5-47
Recall 5-48
How to use the FAX Function 5-49
Using Document Boxes 5-50
What is Custom Box? 5-50
What is Job Box? 5-50
What is Removable Memory Box? 5-51
Fax Box 5-51
Basic Operation for Document Box .. 5-51
Creating a New Custom Box 5-55
Editing Custom Box 5-56
Deleting Custom Box 5-57
Storing Documents to a Custom Box 5-57
Printing Documents in Custom Box .. 5-58
Saving Scanned Documents to a Custom Box 5-59
Sending Documents in Custom Box . 5-59
Sending Documents in Custom Box to E-mail Address of Logged In User. 5-60
Moving Documents in Custom Box ... 5-62
Copying Documents in Custom Box into Other Boxes 5-62
Copying Documents in Custom Box to Removable Memory 5-63
Joining Documents in Custom Box ... 5-63
Deleting Documents in Custom Box . 5-64
Job Box 5-65
Outputting Repeat Copy Jobs 5-65
Form for Form Overlay 5-65
Operating using Removable USB Memory . 5-67
Printing Documents Stored in Removable USB Memory 5-67
Saving Documents to USB Memory (Scan to USB) 5-69
Check the USB Memory Information 5-70
Removing USB Memory 5-70
Using the Internet Browser 5-71
Launching and Exiting the Browser .. 5-71
Using the Browser Screen 5-72
Manual Staple 5-73

Loading Originals

Load the originals on the platen or document processor, depending on the original size, type, volume, and function.

- Platen: Place the sheet, book, postcards, and envelopes.
- Document Processor: Place the multiple originals. You can also place the two sided originals.

Placing Originals on the Platen

You may place books or magazines on the platen in addition to ordinary sheet originals.

Category	Detail	
Original Type	Sheets	Booklet
Supported Sizes	Maximum 11.69" × 17"/ 297 × 432 mm Minimum 2.00" × 2.00"/ 50 × 50 mm	A3, A4-R, A5-R, B4, B5-R, Ledger (11" × 17"/ 279 × 432 mm), Letter-R (8.5" × 11"/ 215.9 × 279.4 mm) and 8K

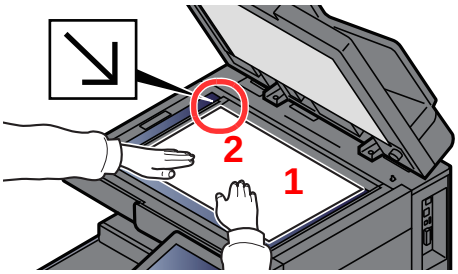

1 Put the scanning side facedown.

2 Align it flush against the original size indicator plates with the back left corner as the reference point.

NOTE

- A5 is detected as A4-R. Set the paper size to A5 by using the function key on the touch panel.
  Original Size (page 6-18)
- For details on Original Orientation, refer to the following:
  Original Orientation (page 6-23)

When you place envelopes or cardstock on the platen

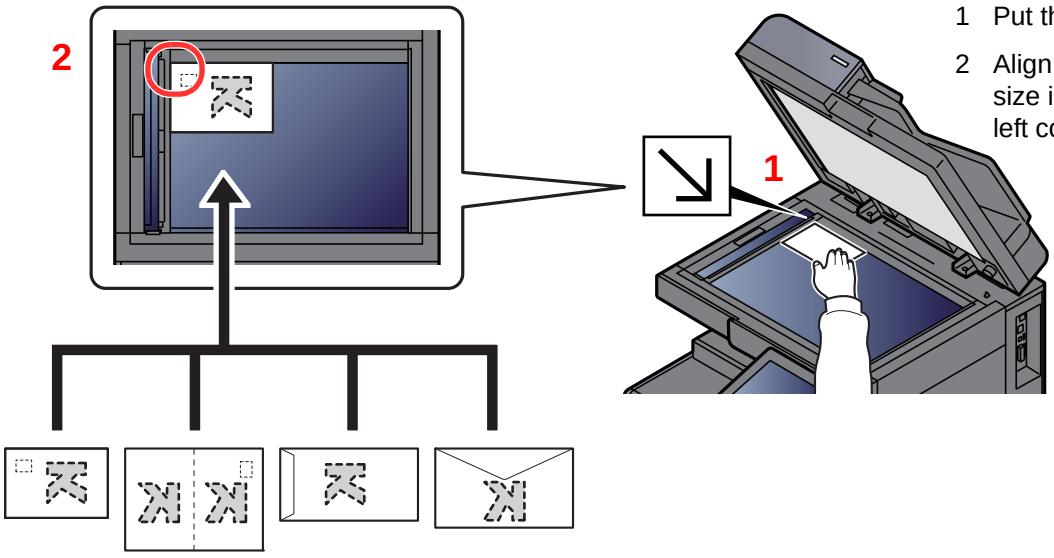

1 Put the scanning side facedown.

2 Align it flush against the original size indicator plates with the back left corner as the reference point.

NOTE

- When you wish to copy the booklet which is smaller than Letter-R, align the gutter (center of booklet) to the **Statement-R** of the original size indicator plates, and select [**Letter-R**] on **OriginalSize**. When you wish to copy the booklet which is larger than Letter-R, align the gutter (center of booklet) to the **Letter** of the original size indicator plates, and select [**Ledger**] on **OriginalSize**. Select [**Preview**] to show a preview image and adjust the gutter to right or left to fit the image as necessary.

  Original Preview (page 2-20)
- A5 is detected as A4-R. Set the paper size to A5 by using the function key on the touch panel.

  Original Size (page 6-18)
- For the procedure for feeding envelopes or cardstock, refer to the following:

Loading Envelopes or Cardstock in the Cassettes (page 3-10)

Loading Envelopes or Cardstock in the Multi Purpose Tray (page 5-9)

CAUTION

Do not leave the document processor open as there is a danger of personal injury.

IMPORTANT

- **Do not push the document processor forcefully when you close it. Excessive pressure may crack the platen glass.**
- **When placing books or magazines on the machine, do so with the document processor in the open position.**

Loading Originals in the Document Processor

The document processor automatically scans each sheet of multiple originals. Both sides of two-sided originals are scanned.

The document processor supports the following types of originals.

Detail	Document Processor (Automatic 2-Sided)		Document Processor (Dual scan DP)
Type	DP-7100	DP-7120*1	DP-7110
Weight	35 to 160 g/m^2 (duplex: 50 to 120 g/m^2)	45 to 160 g/m^2 (duplex: 50 to 120 g/m^2)	35 to 220 g/m^2 (duplex: 50 to 220 g/m^2)
Sizes	Maximum A3/Ledger (11.69" × 17"/ 297 × 432 mm) (Long-sized 11.69" × 74.8"/ 297 × 1,900 mm) to Minimum A6-R/Statement-R (4.13" × 5.82"/105 × 148 mm)	Maximum A3/Ledger (11.69" × 17"/ 297 × 432 mm) (Long-sized 11.69" × 74.8"/ 297 × 1,900 mm) to Minimum A5-R/Statement-R (5.51" × 7.16"/140 × 182 mm	Maximum A3/Ledger (11.69" × 17"/ 297 × 432 mm) (Long-sized 11.69" × 74.8"/ 297 × 1,900 mm) to Minimum A6-R/Statement-R (4.13" × 5.82"/105 × 148 mm)
No. of sheets	Plain paper (80 g/m^2), Recycled paper, Vellum paper: 140 sheets (Mixed size originals: 30 sheets) Thick paper (120 g/m^2): 93 sheets Art paper: 1 sheet	Plain paper (80 g/m^2), Recycled paper, Vellum paper: 50 sheets Thick paper (120 g/m^2): 33 sheets Art paper: 1 sheet	Plain paper (80 g/m^2), Recycled paper, Vellum paper: 270 sheets (Mixed size originals: 30 sheets) Thick paper (120 g/m^2): 180 sheets Art paper: 1 sheet

*1 Option for 2552ci/3252ci.

Do not use the document processor for the following types of originals. Otherwise, the originals may be jammed or the document processor may become dirty.

- Originals bound with clips or staples (Remove the clips or staples and straighten curls, wrinkles or creases before loading. Failure to do so may cause the originals to jam.)
- Originals with adhesive tape or glue
- Originals with cut-out sections
- Curled original
- Originals with folds (Straighten the folds before loading. Failure to do so may cause the originals to jam.)
- Carbon paper
- Crumpled paper

IMPORTANT

- **Before loading originals, be sure that there are no originals left on the original eject table. Originals left on the original eject table may cause the new originals to jam.**
- **Do not make an impact on the document processor top cover, such as aligning the originals on the top cover. It may cause an error in the document processor.**

1 Adjust the original width guides.

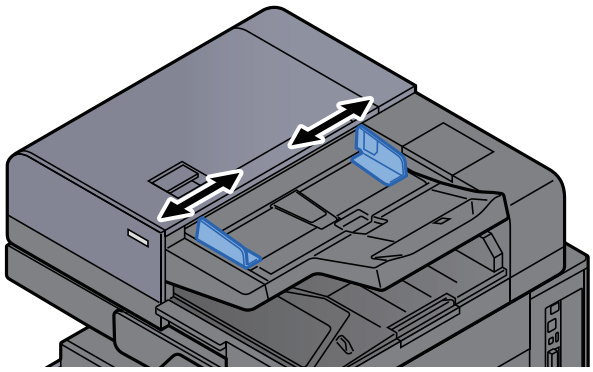

2 Place the originals.

1 Put the side to be scanned (or the first side of two-sided originals) face-up. Slide the leading edge into the document processor as far as it will go. The original loaded indicator lights when the original is placed correctly.

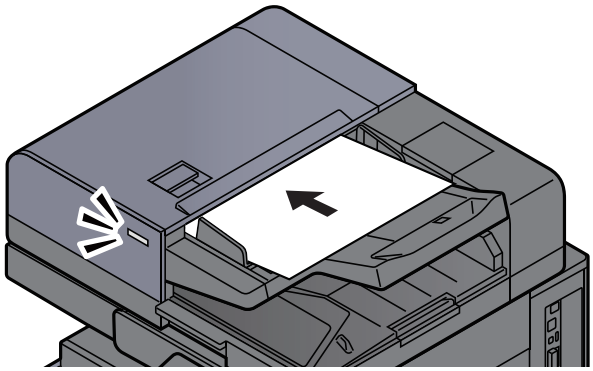

NOTE

For details on Original Orientation, refer to the following:

Original Orientation (page 6-23)

IMPORTANT

- **Confirm that the original width guides exactly fit the originals. If there is a gap, readjust the original width guides. The gap may cause the originals to jam.**

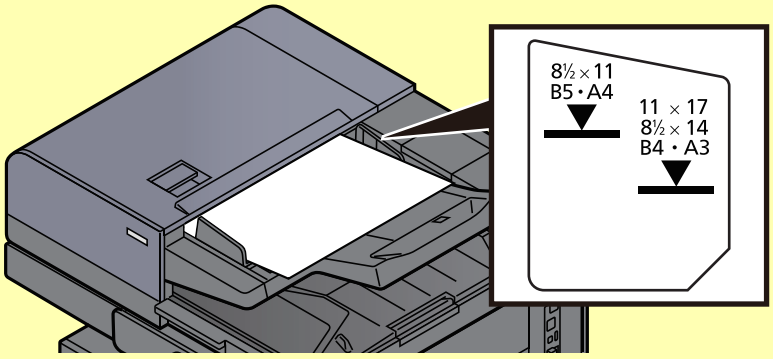

- **Ensure that loaded originals do not exceed the level indicator. Exceeding the maximum level may cause the originals to jam.**
- **Originals with punched holes or perforated lines should be placed in such a way that the holes or perforations will be scanned last (not first).**

2 Open the original stopper to fit the size of the original set (Original size: B4/Legal or more).

DP-7100/DP-7110

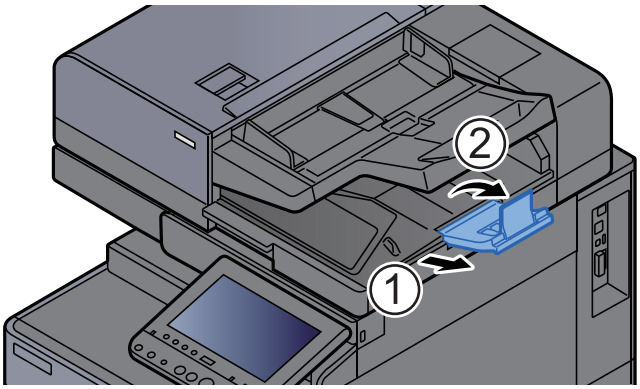

DP-7120

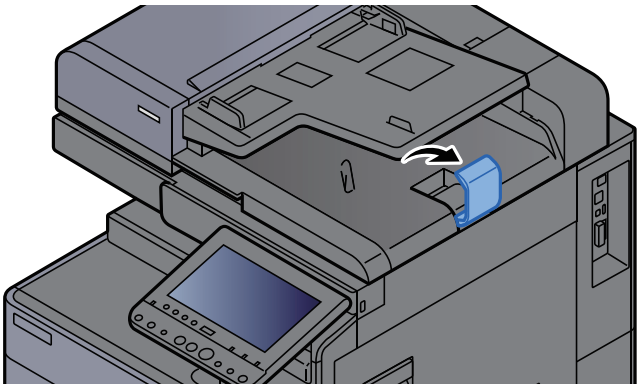

Loading Paper in the Multi Purpose Tray

For details of the supported paper sizes, refer to the following:

Choosing the Appropriate Paper (page 11-14)

For the paper type setting, refer to the following:

Media Type Setting (page 8-15)

Be sure to use the multi purpose tray when you print on any special paper.

IMPORTANT

- **If you are using a paper weight of 106 g/m^2 or more, set the media type to Thick and set the weight of the paper you are using.**
- **Remove each transparency from the inner tray as it is printed. Leaving transparencies in the inner tray may cause a paper jam.**

The capacity of the multi purpose tray is as follows.

- A4 or smaller plain paper (80 g/m^2), recycled paper or color paper: 150 sheets
- B4 or larger plain paper (80 g/m^2), recycled paper or color paper: 50 sheets
- Thick paper (209 g/m^2): 10 sheets
- Thick paper (157 g/m^2): 50 sheets
- Thick paper (104.7 g/m^2): 50 sheets
- Hagaki (Cardstock): 30 sheets
- Envelope DL, Envelope C5, Envelope #10, Envelope #9, Envelope #6 3/4, Envelope Monarch, Youkei 4, Youkei 2: 10 sheets
- OHP film: 10 sheet
- Coated: 10 sheets
- Banner paper: 470.1 mm (18.51") to a maximum of 1220.0 mm (48"): 1 sheet (manual feed), 10 sheets (when optional banner tray is attached)
- Index tab dividers: 15 sheets

NOTE

- When you load custom size paper, enter the paper size by referring to the following:
  Original / Paper Settings (page 8-11)
- When you use special paper such as transparencies or thick paper, select the media type by referring to the following:
  MP Tray Setting (page 8-8)
- Paper size can be automatically detected and selected, refer to the following:
  Paper Selection (page 6-19)
  MP Tray Setting (page 8-8)

1 Open the multi purpose tray.

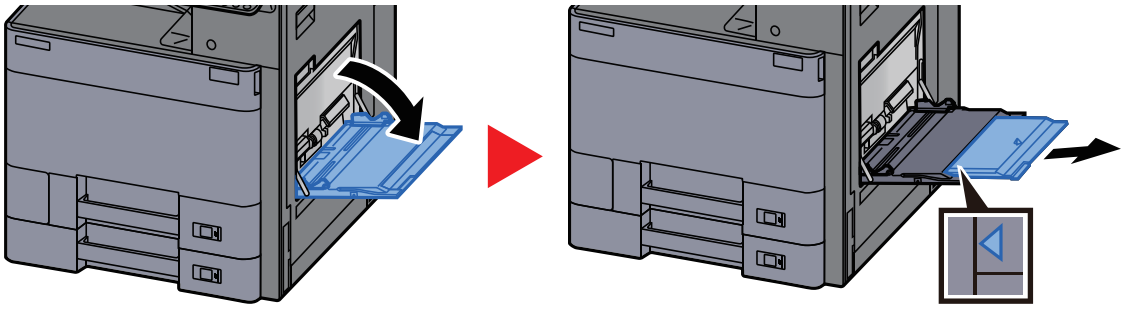

2 Adjust the multi purpose tray size.

Paper sizes are marked on the multi purpose tray.

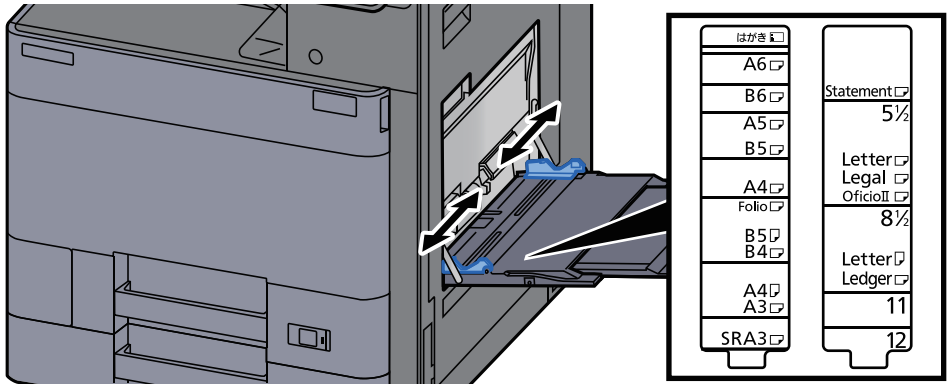

3 Load paper.



Insert the paper along the paper width guides into the tray until it stops.

After removing new paper from its packaging, fan the paper before loading it in the multi purpose tray.

Precaution for Loading Paper (page 3-2)

IMPORTANT

- **When loading the paper, keep the print side facing down.**
- **Curled paper must be uncurled before use.**
- **When loading paper into the multi purpose tray, check that there is no paper left over in the tray from a previous job before loading the paper. If there is just a small amount of paper left over in the multi purpose tray and you want to add more, first remove the left-over paper from the tray and include it with the new paper before loading the paper back into the tray.**
- **If there is a gap between the paper and the paper width guides, readjust the guides to fit the paper in order to prevent skewed feeding and paper jams.**
- **Ensure that the loaded paper does not exceed the load limits.**

4 Specify the type of paper loaded in the multi purpose tray using the operation panel.

MP Tray Setting (page 8-8)

Loading Envelopes or Cardstock in the Multi Purpose Tray

Load the paper with the print side facing down. For the procedure for printing, refer to the following:

Printer Driver User Guide

Example: When printing the address.

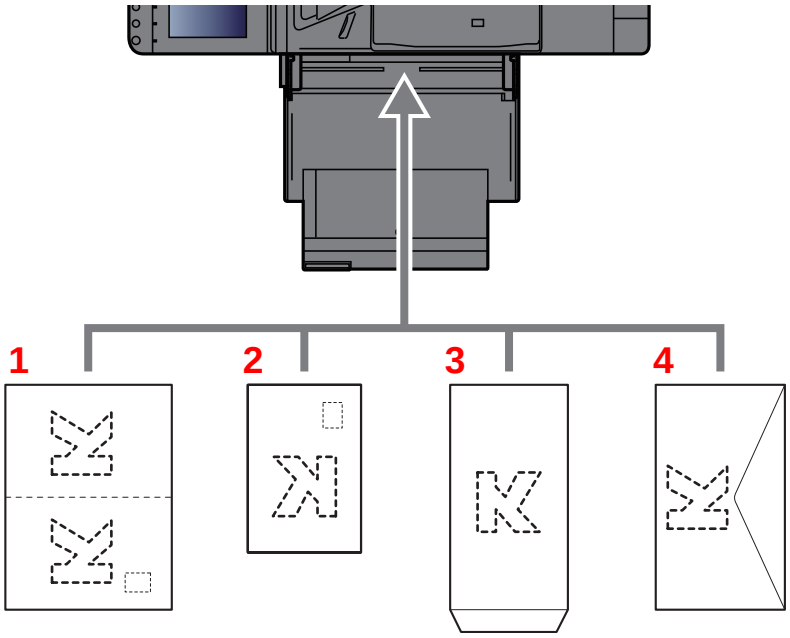

1 Oufuku hagaki (Return postcard)
2 Hagaki (Cardstocks)
3 Portrait form envelopes (Open the flap)
4 Landscape form envelopes (Close the flap)

IMPORTANT

- **Use unfolded Oufuku hagaki (Return postcard).**
- **How to load envelopes (orientation and facing) will differ depending on the type of envelope. Be sure to load it in correctly, otherwise printing may be done in the wrong direction or on the wrong face.**

NOTE

When you load envelopes in the multi purpose tray, select the envelope type by referring to the following:

Cassette/MP Tray Settings (page 8-7)

Loading Index Paper in the Multi Purpose Tray

1 Prepare paper.

Sort the pages so that the 1st page is at the back.

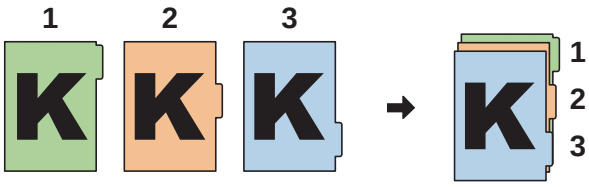

2 Orient the paper in the same orientation.

Place the paper print side down, oriented so that the tabs are on the trailing side of the paper when it feeds in.

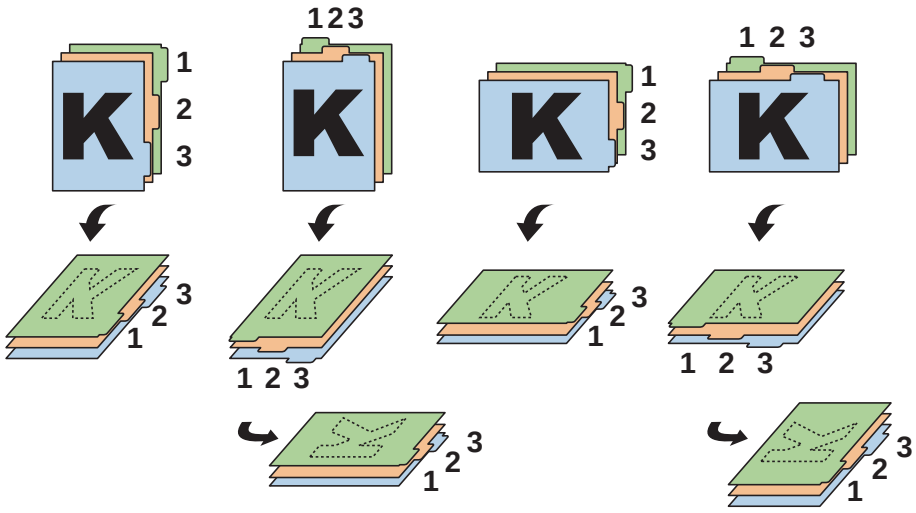

3 Load paper.

Load paper in the tray.

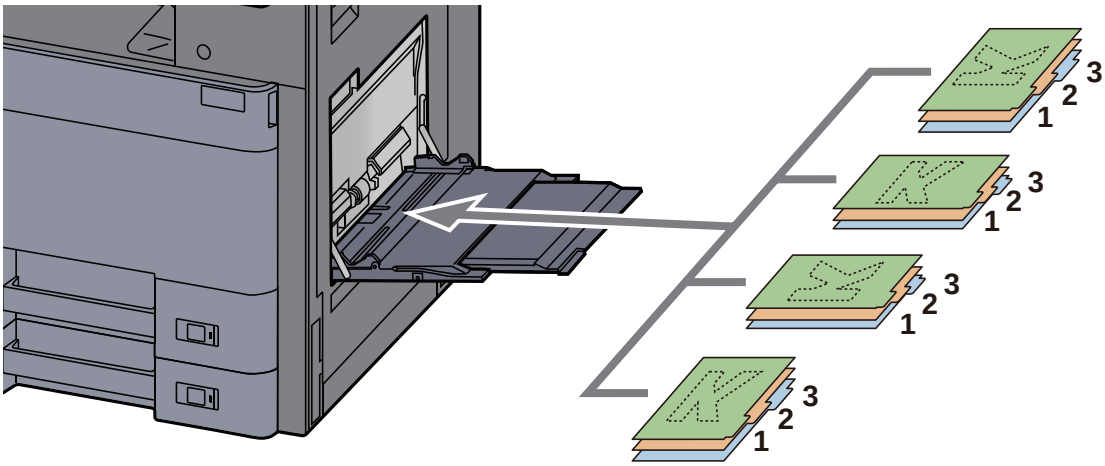

For the procedure for printing, refer to the following:

Printer Driver User Guide

Index paper must meet the following conditions.

Item	Description
Paper size	A4/Letter
Paper weight	136 to 256 g/m^2
Number of tabs	1 to 15
Length of tabs	30 mm or less

Program

By registering sets of frequently used functions as a single program, you can simply press the program number as needed to recall those functions. You can also name the programs for easy identification when recalling.

The programs below have been preregistered. The registered contents can be re-registered for easier use in your environment.

Program name	Description	Default Registration
ID Card Copy	Use this when you want to copy a driver's license or an insurance card. When you scan the front and back of the card, both sides will be combined and copied onto a single sheet.	Copying Functions Color: Black & White Combine: [**2 in 1**] Continuous Scan: [**On**] Original Size: A5/Statement Paper Selection: Cassette 1 Zoom: Auto Zoom
Eco Copy	Use this to save toner consumption when printing. This changes color printing to black & white with lighter density, so that the toner consumption can be reduced.	Copying Functions Color: Black & White EcoPrint: [**On**] (Level [**5**])
Newspaper Copy	Use this when you want to copy a newspaper article, or other originals printed on a colored substrate. This adjusts the image quality so that the color of the substrate or the text on the reverse side will not show on the copy.	Copying Functions Color: Black & White Prevent Bleed-thru: [**On**] Background Density Adj.: [**Auto**]
Technical Drawing Copy	Use this when you want to copy a drawing that contains shapes drawn with lines, and graphics. Use this also when you want to copy colored lines in black & white.	Copying Functions Color: Black & White Original Image: [**Text**] Sharpness (All): [**+3**] Background Density Adj.: [**Auto**]
Confidential Stamp	Use this to show a translucent text "Confidential" on the center of the document.	Copying Functions Color: Black & White Prevent Bleed-thru: [**On**] Stamp: Confidential Font Size: middle Font Color: [**Black**] Stamp Position: [**Center**] Display Pattern: [**Transparent**]
Highlighter Copy	Use this when you want to clearly print out the color of text and lines written/drawn by a highlighter pen, which are normally difficult to copy.	Copying Functions Color: Full Color Original Image: Text+Photo [**Book /Magazine**] Highlighter: On
Vivid Copy	Use this when you want to make a copy with an overall vivid appearance.	Copying Functions Color: Full Color Original Image: Text+Photo [**Book /Magazine**] One-touch Image Adjust: [**Vivid**]

NOTE

Up to 50 functions combining copying and sending can be registered in the program.
If user login administration is enabled, you can only register functions by logging in with administrator privileges.

Registering Programs

The following procedure is an example of registering the copying function.

1 Display the screen.

1 [**Home**] key > [**Copy**]

2 Select the [**Program**] tab while the copy mode is accessed.

2 Register the program.

1 [**Add**] > Select a number (01 to 50) for the program number > [**Next**]

> **NOTE**
> If you select a program number already registered, the currently registered functions can be replaced with a new set of functions.

2 Enter the new program name > [**Save**]

The program is registered.

To display a registered program on the Home screen, select [**Yes**] on the confirmation screen that appears, proceed to step 2-3.

3 Specify the position in which you want to display the icon of registered program.

4 Select [**Save**].

Recalling Programs

1 Recall the program.

1 Select [**Program**] in the Home screen, or the key of the registered program.

Selecting the key of the registered program will recall the program. If you selected [**Program**], proceed to step 1-2.

2 Select the key for the program number you want to recall.

Select [**No.**] or the Quick No. Search key on the numeric keypad to enter the program number (01 to 50) directly for recalling.

> **NOTE**
> If the program cannot be recalled, the Document Box or the form overlay specified in the program might have been deleted. Check the Document Box.

2 Execute the program.

Place the originals > [**Start**] key

> **NOTE**
> [**Program**] can be pressed in each function to call up the program registered for the function.

Editing Programs

You can change program number and program name.

1 Display the screen.

1. [**Home**] key > [**Program**]
2. Select [**Edit**].

2 Edit the program.

1. Select the key(s) corresponding to the program number (01 to 50) to change.
2. Select [**Edit**] to change the program number and program name.

Registering Programs (page 5-12)

3. [**Save**] > [**Yes**]

Deleting Programs

1 Display the screen.

1. [**Home**] key > [**Program**]
2. Select [**Edit**].

2 Delete the program.

1. Select the key(s) corresponding to the program number (01 to 50) to delete.
2. [**Delete**] > [**Yes**]

Application

The functionality of the machine can be expanded by installing applications.

Applications that help you perform your daily more efficiently such as a scan feature and an authentication feature are available.

For details, consult your sales representative or dealer.

Installing Applications

To use applications, first install the application in the machine and then activate the application.

NOTE

You can install applications and certificates on the machine. The number of applications you can run may vary according to the type of application.

1 Display the screen.

[**System Menu/Counter**] key > [**Application**]

NOTE

- If the user authentication screen appears, enter your login user name and login password and select [**Login**]. For this, you need to login with administrator privileges. The factory default login user name and login password are set as shown below.

Model Name	Login User Name	Login Password
2552ci	2500	2500
3252ci	3200	3200
4052ci	4000	4000
5052ci	5000	5000
6052ci	6000	6000

- Select [**Print Report**] to print an application report.

2 Install the application.

1. [**Add**] > [**OK**]
2. Insert the removable memory containing the application to be installed into the USB Memory Slot.

   NOTE

   When the message "Removable Memory was recognized. Displaying files. Are you sure?" is displayed, select [**No**].

3. Select the application to be installed > [**Install**]

   You can view detailed information on the selected application by selecting [**Detail**].

4 Select [**Yes**].

Installation of the application begins. Depending on the application being installed, the installation may take some time.

Once the installation ends, the original screen reappears.

NOTE

- To install another application, repeat steps 2-3 and 2-4.
- To remove the removable memory, select [**Remove Memory**] and wait until the message "Removable Memory can be safely removed." appears. Then remove the removable memory.

Activating Applications

1 Display the screen.

[**System Menu/Counter**] key > [**Application**]

NOTE

If the user authentication screen appears, enter your login user name and login password and select [**Login**]. For this, you need to login with administrator privileges. The factory default login user name and login password are set as shown below.

Model Name	Login User Name	Login Password
2552ci	2500	2500
3252ci	3200	3200
4052ci	4000	4000
5052ci	5000	5000
6052ci	6000	6000

2 Activate the application.

1 Select the desired application > [**Activate**]

You can view detailed information on the selected application by selecting [**Detail**].

2 Enter the license key > [**Official**]

Some applications do not require you to enter a license key. If the license key entry screen does not appear, go to step 3-3. To use the application as a trial, select [**Trial**] without entering the license key.

3 Select [**Yes**].

IMPORTANT

- **If you change the date/time while using the trial version of an application, you will no longer be able to use the application.**
- **Icons of activated application are displayed in the Home screen.**

3 Select the application icon in the Home screen.

Select the application icon.

The application will start up.

Deactivating Applications

1 Display the screen.

[**System Menu/Counter**] key > [**Application**]

NOTE

If the user authentication screen appears, enter your login user name and login password and select [**Login**]. For this, you need to login with administrator privileges. The factory default login user name and login password are set as shown below.

Model Name	Login User Name	Login Password
2552ci	2500	2500
3252ci	3200	3200
4052ci	4000	4000
5052ci	5000	5000
6052ci	6000	6000

2 Deactivate the application.

Select the desired application to exit > [**Deactivate**]

NOTE

Select [**x**] on the screen if you want to exit the already activated application.

The procedure for exiting some applications may differ.

Uninstalling Applications

1 Display the screen.

[**System Menu/Counter**] key > [**Application**]

NOTE

If the user authentication screen appears, enter your login user name and login password and select [**Login**]. For this, you need to login with administrator privileges. The factory default login user name and login password are set as shown below.

Model Name	Login User Name	Login Password
2552ci	2500	2500
3252ci	3200	3200
4052ci	4000	4000
5052ci	5000	5000
6052ci	6000	6000

2 Deactivate the application.

1 Select the application you want to delete > [**Delete**]

You can view detailed information on the selected application by selecting [**Detail**].

2 Select [**Yes**].

Registering Shortcuts (Copy, Send, and Document Box Settings)

You can register shortcuts in the Quick Setup screen for easy access to the frequently used functions. The settings for the selected function can also be registered. A function name linked to a registered shortcut can be changed as necessary.

Adding Shortcuts

Shortcut registration is performed in the setup screen of each function. Shortcuts can be registered for all functions in which [**Add Shortcut**] appears on the screen.

1 In each function, display the configuration screen you want to register.

2 Register the shortcuts.

1 Select the setting you want to add.

2 Select [**Add Shortcut**].

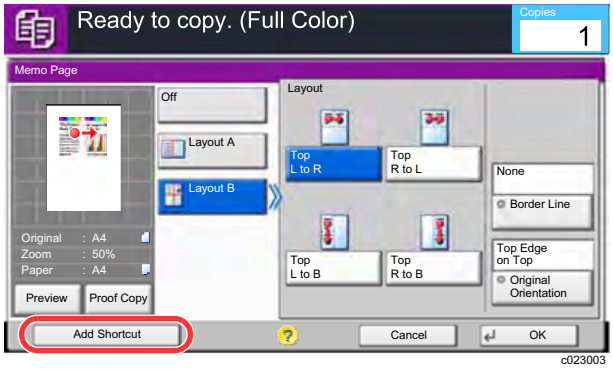

3 Select the keys corresponding to the shortcut number (01 to 06) to register.

NOTE

If you select a shortcut number already registered, the currently registered shortcut can be replaced with a new one.

4 Enter the shortcut name > [**Save**].

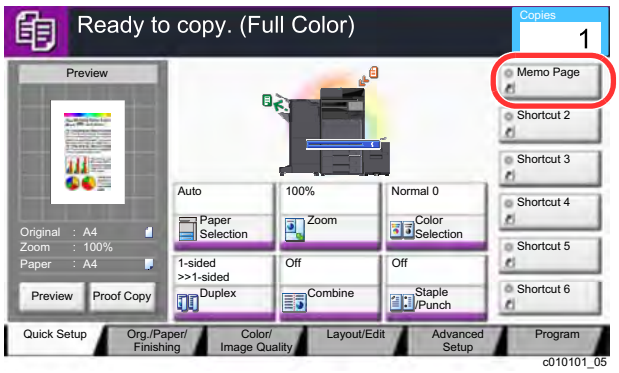

The shortcut is registered.

Editing Shortcuts

1 In the setup screen of each function, select [Add Shortcut] in the bottom of the screen.

2 Edit the shortcut

1. Select [**Edit**].
2. Select the shortcut key you want to edit.
3. Select "Shortcut No" [**Change**] or "Shortcut Name" [**Change**] > Change the settings > [**OK**].
4. [**Save**] > [**Yes**]

Deleting Shortcuts

1 In the setup screen of each function, select [Add Shortcut] in the bottom of the screen.

2 Delete the shortcut

1. Select [**Edit**].
2. Select the shortcut key you want to delete > [**Delete this Shortcut**] > [**Yes**]

Copying

The procedures here represent the basic copy operation and how to cancel the copy.

Basic Operation

1 [Home] key > [Copy]

2 Place the originals.

1 Place the originals.

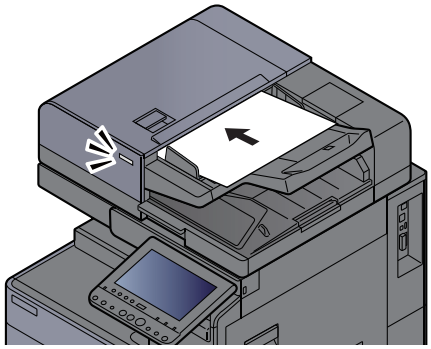

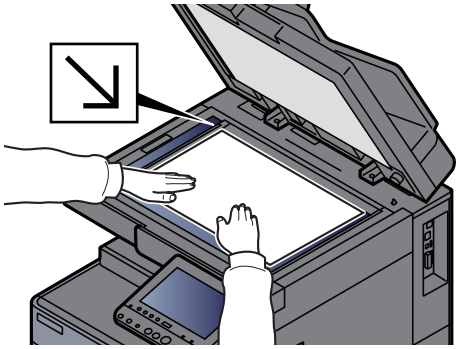

Loading Originals (page 5-2)

2 Check the preview image.

Check the Original, Zoom, and Paper settings.

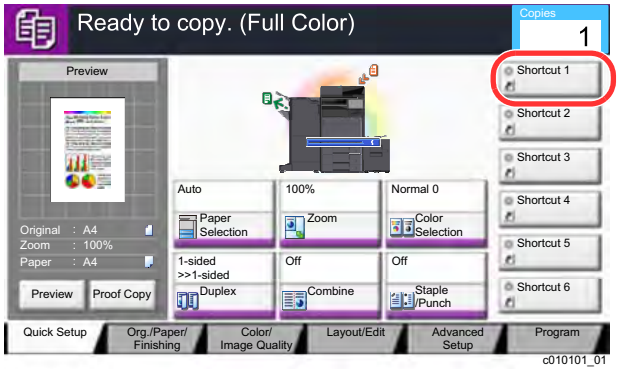

NOTE

Select [**Preview**] to show a preview image.

Original Preview (page 2-20)

3 Select the functions.

To configure the settings for functions, select the function key.

How to Select Functions (page 6-2)

4 Use the numeric keys to enter the copy quantity.

Select the [**Numeric Keypad**] key or the area for inputting the number of sheets to display the numeric keypad. Specify the desired number up to 999.

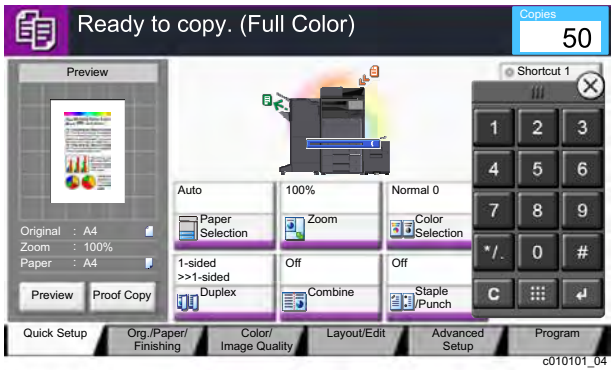

5 Press the [Start] key.

Copying begins.

NOTE

This function allows you to reserve the next job during printing. Using this function, the original will be scanned while the machine is printing. When the current print job ends, the reserved copy job is printed. If "Reserve Next Priority" is set to [**Off**], [**Reserve Next**] will appear. Select [**Reserve Next**] and configure the necessary settings for the copy job.

Reserve Next Priority (page 8-33)

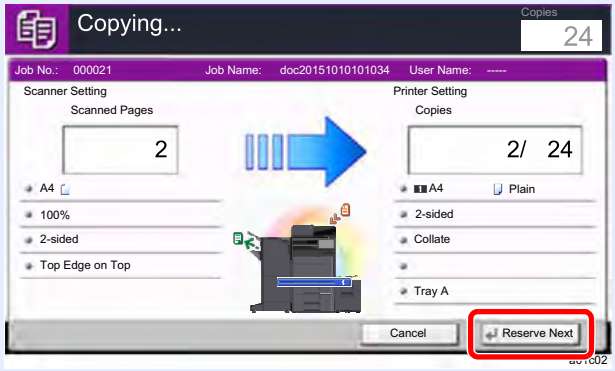

Proof Copy

It is possible to copy one sheet before copying a large number of sheets. This enables you to check the contents and finishing and copy the desired number of sheets without scanning the original if you are satisfied with the result. If you want to make changes, you can change the settings and copy only one sheet again.

1 Configure the settings.

Place the originals onto the machine, and configure the copy settings.

2 Select [Proof Copy].

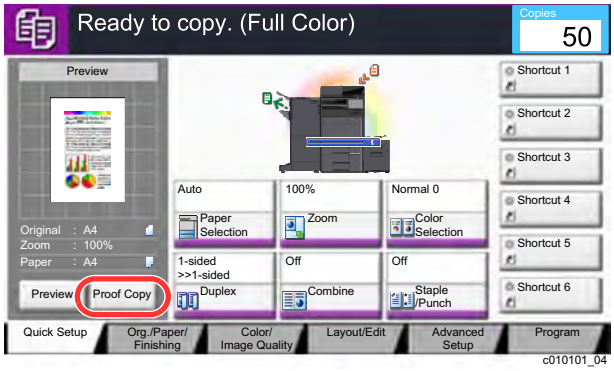

c010101_04

3 Check.

Check contents and finishing.

Modify copy settings according to results. All functions except for functions whose keys are grayed out on the touch panel can be corrected.

To perform a proof copy again, select [**Proof Copy**].

4 Press the [Start] key.

Remaining sheets are copied.

Interrupt Copy

This function allows you to pause the current jobs in progress when you need to make copies immediately.

When the interruption copy ends, the machine resumes the paused print jobs.

NOTE

- If the machine is left unused for 60 seconds in interrupt copy mode, interrupt copying is automatically cancelled and printing resumes.
  You can change the delay until interrupt copying is canceled. Change the delay as required.
  Interrupt Clear Timer (page 8-69)
- The interrupt copy function may be unavailable depending on the status of document finisher usage. In this case, try the priority override.
  Priority Override (page 6-71)

1 Configure the settings.

1 Select the [**Interrupt**] key.

The current print job is temporarily interrupted.

2 Place the originals onto the machine for interrupt copy, and configure the copy settings.

2 Press the [Start] key.

Interrupt copying begins.

3 When interrupt copying ends, select the [Interrupt] key.

The machine resumes the paused print jobs.

Canceling Jobs

1 Select the [Stop] key with the copy screen displayed.

2 Cancel a job.

When there is a job is being scanned

The copy job is canceled.

When there is a job printing or on standby

Canceling job screen appears. The current print job is temporarily interrupted.

Select the job you wish to cancel > [**Cancel**] > [**Yes**]

NOTE

If "Reserve Next Priority" is set to [**Off**], the Copying screen appears in the touch panel. In such case, selecting the [**Stop**] key or [**Cancel**] will cancel the printing job in progress.

Reserve Next Priority (page 8-33)

Frequently-Used Sending Method

This machine can send a scanned image as an attachment of an E-mail message or to a PC linked to the network. In order to do this, it is necessary to register the sender and destination (recipient) address on the network.

A network environment which enables the machine to connect to a mail server is required in order to send E-mail. It is recommended that a Local Area Network (LAN) be used to assist with transmission speed and security issues.

Follow the steps below for basic sending. The following four options are available.

- Send as E-mail (E-mail Addr Entry): Sends a scanned original image as an E-mail attachment.

Sending Document via E-mail (page 5-25)

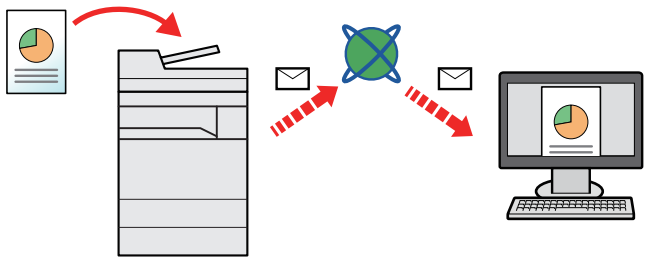

- Send to Folder (SMB): Stores a scanned original image in a shared folder of any PC.

Sending Document to Desired Shared Folder on a Computer (Scan to PC) (page 5-26)

- Send to Folder (FTP): Stores a scanned original image in a folder of an FTP server.

Sending Document to Folder on an FTP Server (Scan to FTP) (page 5-29)

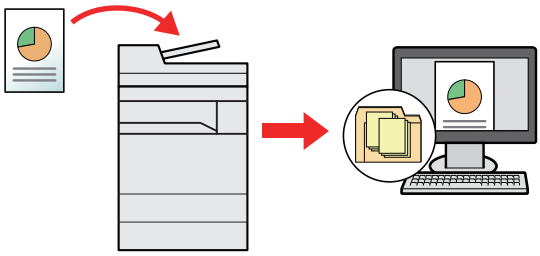

- Image Data Scanning with TWAIN / WIA: Scan the document using a TWAIN or WIA compatible application program.

Scanning using TWAIN or WIA (page 5-31)

NOTE

- Different sending options can be specified in combination.

Sending to Different Types of Destinations (Multi Sending) (page 5-40)

- The fax function can be used on products equipped with fax capability.

FAX Operation Guide

Sending Document via E-mail

When transmitting using wireless LAN, select the interface dedicated to the send function in advance.

Primary Network (Client) (page 8-62)

Configuring Settings before Sending

Before sending an E-mail, configure the SMTP and E-mail settings using the Command Center RX.

E-mail Settings (page 2-65)

Sending Scanned Document via E-mail

1 [Home] key > [Send]

2 Place the originals.

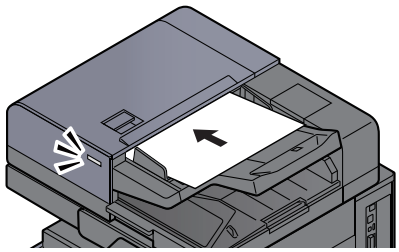

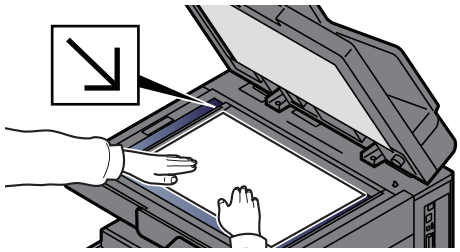

Loading Originals (page 5-2)

3 In the basic screen for sending, select [E-mail Addr Entry].

4 Enter destination E-mail address > [OK]

Up to 128 characters can be entered.

Character Entry Method (page 11-10)

To enter multiple destinations, select [**Next Destination**] and enter the next destination. Up to 100 E-mail addresses can be specified.

You can register the entered E-mail address in the Address Book by selecting [**Add Address Book**]. You can also replace the information for a previously registered destination.

Destinations can be changed later.

Confirmation Screen of Destinations (page 5-47)

NOTE

If [**Prohibit**] is set to “Broadcast”, multiple destinations cannot be entered.

Broadcast (page 8-35)

5 Select the functions.

Press tabs to display other functions.

Send (page 6-5)

6 Press the [Start] key.

Sending starts.

Sending Document to Desired Shared Folder on a Computer (Scan to PC)

You can store the scanned document into the desired shared folder on a computer.

Configuring Settings before Sending

Before sending a document, configure the following settings.

- Make a note of the computer name and full computer name
  Making a note of the computer name and full computer name (page 3-20)
- Make a note of the user name and domain name
  Making a note of the user name and domain name (page 3-21)
- Create a shared folder and make a note of a shared folder
  Creating a Shared Folder, Making a Note of a Shared Folder (page 3-22)
- Configure the Windows firewall
  Configuring Windows Firewall (page 3-25)

Sending Document to Desired Shared Folder on a Computer

When transmitting using wireless LAN, select the interface dedicated to the send function in advance.

Primary Network (Client) (page 8-62)

1 [Home] key > [Send]

2 Place the originals.

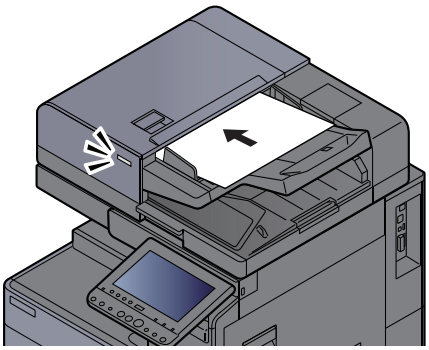

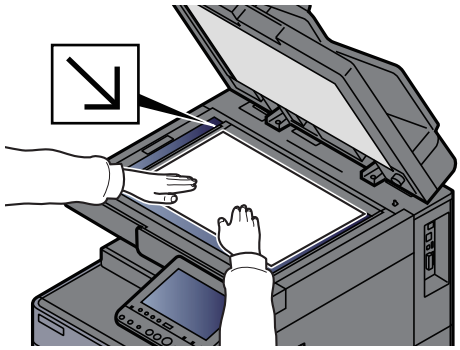

Loading Originals (page 5-2)

3 In the basic screen for sending, select [Folder Path Entry].

4 Enter the destination information.

1 Select [**SMB**].

2 Select the key of each item > enter the destination data > [**OK**].

Character Entry Method (page 11-10)

The table below lists the items to be set.

Item	Detail	Max. characters
Host Name *1	Computer name	Up to 70 characters
Path	Share name For example: scannerdata If saving in a folder in the shared folder: share name\folder name in shared folder	Up to 128 characters
Login User Name*2	If the computer name and domain name are the same: User Name For example: james.smith If the computer name and domain name are different: Domain name\User name For example: abcdnet\james.smith	Up to 64 characters
Login Password	Windows logon password **(Case sensitive.)**	Up to 64 characters

*1 You can also specify the port number. Enter the following format separated by a colon.
"Host name: port number" or "IP address: port number"
To enter the IPv6 address, enclose the address in brackets [ ].
(Example: [2001:db8:a0b:12f0::10]:445)
If the port number is not specified in [Host Name], the default port number is 445.

*2 When sending a document through an optional network interface (IB-50 or IB-51), "\" cannot be used. If the computer name is different from the domain name, login user name needs to be input by using "@."
(Example: james.smith@abcdnet)

To search for a folder on a PC on the network, select "Search Folder from Network" or "Search Folder by Host Name" [**Next**].

If you selected "Search Folder from Network" [**Next**], you can enter the "Domain/Workgroup", and "Host Name" to search PCs on the network for the destination.

If you pressed "Search Folder by Host Name"[**Next**], you can search all PCs on the network for a destination.

Up to 500 addresses can be displayed. Select the host name (PC name) that you want to specify in the screen that appears, and select [**Next**]. The login user name and login password entry screen appears.

After you enter the login user name and login password name of the destination PC, the shared folders appear. Select the folder that you want to specify and select [**Next**]. The address of the selected shared folder is set.

Select the folder from the Search Results list.

5 Check the status.

1 Check the information.

Change the delay as required.

2 Select [**Connection Test**] to check the connection.

"Connected." appears when connection to the destination is correctly established. If "Cannot connect." appears, review the entry.

To enter multiple destinations, select [**Next Destination**] and enter the next destination. You can specify a combine total of up to 10 SMB and FTP destination folders.

You can register the entered information in the Address Book by selecting [**Add to Address Book**].

NOTE

If [**Prohibit**] is set to “Broadcast”, multiple destinations cannot be entered.

Broadcast (page 8-35)

6 Select [OK].

Destinations can be changed later.

Confirmation Screen of Destinations (page 5-47)

7 Select the functions.

Select tabs to display other functions.

Send (page 6-5)

8 Press the [Start] key.

Sending starts.

Sending Document to Folder on an FTP Server (Scan to FTP)

Configuring Settings before Sending

Before sending a document, configure the FTP Client (Transmission).

Protocol Settings (page 8-55)

Sending Document to Folder on an FTP Server

When transmitting using wireless LAN, select the interface dedicated to the send function in advance.

Primary Network (Client) (page 8-62)

1 **[Home] key > [Send]**

2 **Place the originals.**

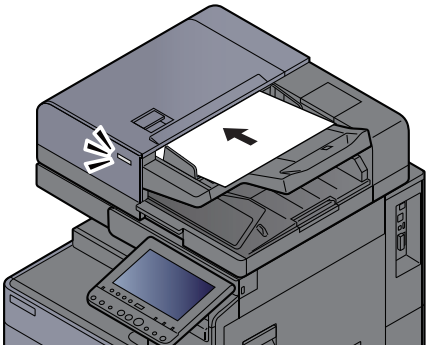

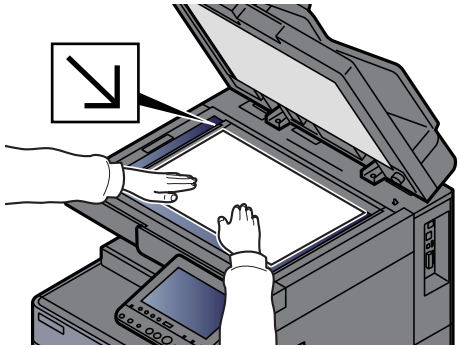

Loading Originals (page 5-2)

3 **In the basic screen for sending, select [Folder Path Entry].**

4 **Enter the destination information.**

1 Select [**FTP**].

2 Select the key of each item > enter the destination data > [**OK**].

Character Entry Method (page 11-10)

The table below lists the items to be set.

Item	Data to be entered	Max. characters
Host Name *1	Host name or IP address of FTP server	Up to 70 characters
Path[*2]	Path to the receiving folder For example: User\ScanData Otherwise the data will be saved in the home directory.	Up to 128 characters
Login User Name	FTP server login user name	Up to 64 characters
Login Password	FTP server login password **(Case sensitive.)**	Up to 64 characters

*1 You can also specify the port number. Enter the following format separated by a colon.
"Host name: port number" or "IP address: port number"
To enter the IPv6 address, enclose the address in brackets [ ].
(Example: [2001:db8:a0b:12f0::10]:21)
If the port number is not specified in [Host Name], the default port number is 21.

*2 When the FTP server is based on Linux/UNIX, the path including the sub-folder is combined by the slash "/" not using the back-slash.

5 Check the status.

1 Check the information.

Change the delay as required.

2 Select [**Connection Test**] to check the connection.

"Connected." appears when connection to the destination is correctly established. If "Cannot connect." appears, review the entry.

To enter multiple destinations, select [**Next Destination**] and enter the next destination.

You can register the entered information in the Address Book by selecting [**Add Address Book**].

NOTE

If [**Prohibit**] is set to “Broadcast”, multiple destinations cannot be entered.

Broadcast (page 8-35)

6 Select [OK].

Destinations can be changed later.

Confirmation Screen of Destinations (page 5-47)

7 Select the functions.

Select tabs to display other functions.

Send (page 6-5)

8 Press the [Start] key.

Sending starts.

Scanning using TWAIN or WIA

When transmitting using wireless LAN, select the interface dedicated to the send function in advance.

Primary Network (Client) (page 8-62)

Configuring Settings before Sending

Before sending a document, confirm that TWAIN/WIA driver is installed on a computer and the settings are configured.

Setting TWAIN Driver (page 2-55)

Setting WIA Driver (page 2-57)

Scanning Document Using Application

This subsection explains how to scan an original using TWAIN. The WIA driver is used in the same way.

1 Display the screen.

1 Activate the TWAIN compatible application software.

2 Select the machine using the application and display the dialog box.

NOTE

For selecting the machine, see the Operation Guide or Help for each application software.

2 Configure the scan settings.

Select scanning settings in the dialog box that opens.

NOTE

For the settings, refer to Help in the dialog box.

3 Place the originals.

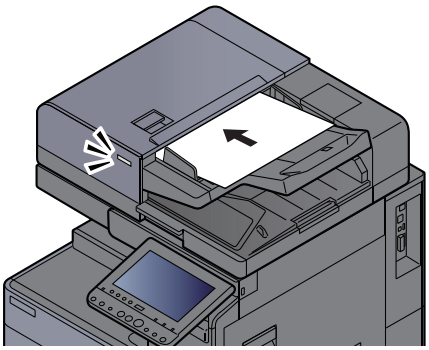

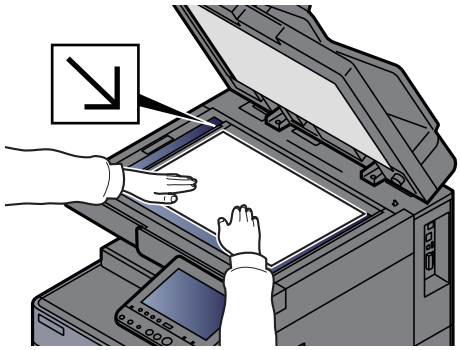

Loading Originals (page 5-2)

4 Scan the originals.

Click the [**Scan**] button. The document data is scanned.

Scanning Document stored in a Custom Box

Follow the steps as below for scanning a document stored in a custom box using the TWAIN driver.
When transmitting using wireless LAN, select the interface dedicated to the send function in advance.

Primary Network (Client) (page 8-62)

Configuring Settings before Sending

Before sending a document, confirm that TWAIN driver is installed on a computer and the settings are configured.

Setting TWAIN Driver (page 2-55)

Scanning Document Stored in a Box

This subsection explains how to scan an original using an application supporting TWAIN.

1 Display the screen.

1 Activate the TWAIN compatible application software.

2 Select the machine using the application and display the dialog box.

NOTE

For selecting the machine, see the Operation Guide or Help for each application software.

2 Display lists of documents.

1 Select a custom box stored a document.

If a password has been set for the box, the password entry screen appears. Enter the password and click the [**OK**] button. When you select a box, the document files in the Custom Box appear in "Document List".

2 Set how to display the document data. Click the [**Setting**] button to select each item.

NOTE

For the settings, refer to Help in the dialog box.

3 Click [**OK**] button.

3 Scan the originals.

1 Select the document data to be scanned from "Document List".

Enter the document data name in the Search (Name) to find the data having the same document data name or the document data name with the same beginning.

Click the [**Detail**] button to display the selected document data. When the document data includes multiple pages, select the checkbox beside the pages you want to scan. The selected pages will be scanned.

NOTE

In this case, the scanned page or the selected document data will not be deleted from the Custom Box.

2 Click the [**Acquire**] button.

The document data is scanned.

Useful Sending Method

You can specify the following useful scanning (sending) methods.

WSD Scan: Saves images of originals scanned on this machine as files on a WSD-compatible computer.

WSD Scan (page 5-34)

DSM Scan: A scanned document can be automatically saved in any format or sent to any destination by reading a scan process from Active Directory.

DSM Scan (page 5-37)

Scanning with File Management Utility: Scans a document using the settings of File Management Utility and saves it to a specified network folder or PC.

Scanning with File Management Utility (page 5-39)

Sending to different types of destinations (Multi sending): Sends to different types of destination (E-mail addresses, folders, etc.) in a single operation.

Sending to Different Types of Destinations (Multi Sending) (page 5-40)

Send to Me (E-mail): Sends to the E-mail address of the logged in user when user login is enabled.

Send to Me (E-mail) (page 5-41)

WSD Scan

WSD Scan saves images of originals scanned on this machine as files on a WSD-compatible computer.

NOTE

- To use WSD Scan, confirm that the computer used for WSD scanning and the machine is network-connected, and "WSD Scan" is set to [**On**] in the network settings.
  WSD Scan (page 8-56)
- For information on operating the computer, refer to the computer's help or the operation guide of your software.

When transmitting using wireless LAN, select the interface dedicated to the send function in advance.

Primary Network (Client) (page 8-62)

Installing the Driver

For Windows 8, Windows 8.1 and Microsoft Windows Server 2012

1 Click [Search] in charms, [Control Panel], and then [View devices and printers].

2 Install the driver.

Click [**Add a device**]. Select the machine's icon and then click [**Next**].

When the machine's icon is displayed in "**Printers**" on the [**Devices and Printers**] screen, the installation is completed.

For Windows 7

1 Display [Network] in the Start menu.

Click [**Start**] button on the Windows and then select [**Network**].

NOTE

When [**Network**] does not appear in the Start menu, perform the following procedure.

1. Right-click [**Start**] and click [**Property**] in the menu that appears.
2. Select the [**[Start] menu**] tab in the "**Task bar and [Start] menu properties**" screen, and click [**Customize**].
3. When the "**Customize [Start] menu**" screen appears, select the "**Network**" check box and click [**OK**].

2 Install the driver.

Right-click the machine's icon and then click [**Install**].

> **NOTE**
> If the "**User Account Control**" window appears, click [**Continue**].
> If the "**Found New Hardware**" window appears, click [**Cancel**].

During the installation, double-click the icon shown on the task bar to display the "**Driver Software Installation**" screen. When "**Your devices are ready to use**" is displayed on the [**Driver Software Installation**] screen, the installation is completed.

For Windows 10

1 Right-click [Start] button on the Windows and select [Control Panel] and then [View devices and printer].

2 Install the driver.

Click [**Add a device**]. Select the machine's icon and then click [**Next**].

When the machine's icon is displayed in "**Printers**" on the [**Devices and Printers**] screen, the installation is completed.

Executing WSD scan

1 [Home] key > [Send]

2 Place the originals.

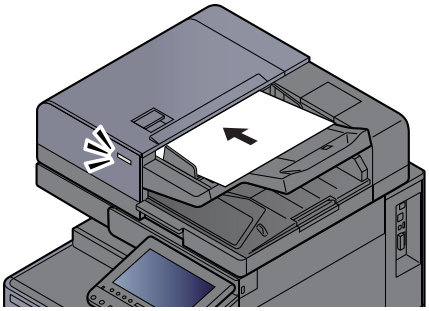

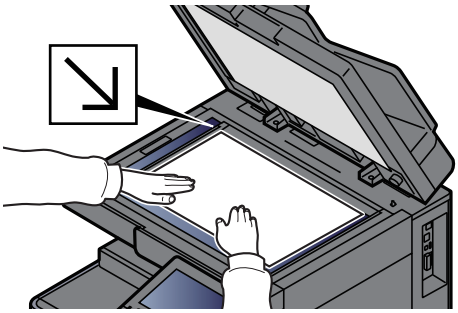

Loading Originals (page 5-2)

3 Display the screen.

Select [**WSD Scan/DSM Scan**].

If DSM Scan is set to [**Off**] in the network settings, select [**WSD Scan**] and go to step 4.

DSM Scan (page 8-56)

4 Scan the originals.

Procedure using this machine

1 [**From Operation Panel**] > [**Next**]

2 Select the destination computer > [**OK**]

Select [**Reload**] to reload the computer list.

You can view information on the selected computer by selecting [**Detail**].

3 Set the type of original, file format, etc., as desired.

4 Press the [**Start**] key.

Sending begins and the software installed on the computer is activated.

Procedure from Your Computer

1 [**From Computer**] > [**Start**]

2 Use the software installed on the computer to send the images.

DSM Scan

A scanned document can be automatically saved in any format or sent to any destination by reading a scan process from Active Directory. This function only supports the computers installed Windows Server 2008 R2 or Windows Server 2012.

When transmitting using wireless LAN, select the interface dedicated to the send function in advance.

Primary Network (Client) (page 8-62)

Configuring Settings before Sending

If you are performing DSM scan, check the items below.

- The machine is connected to an Active Directory on the network that the scan process can reference.
- "DSM Scan", "LDAP" and "HTTP" are set to [**On**] in Network.
  Protocol Settings (page 8-55)
- "SSL" is set to [**On**] in Network.
  Security Settings (page 8-59)
- [**Network Authentication**] is set in.
  Enabling User Login Administration (page 9-3)

NOTE

If the Active Directory that the scan process can reference is not on the network authentication server, DSM must be set in Command Center RX.

Command Center RX User Guide

Executing DSM Scan

1 [Home] key > [Send]

NOTE

Depending on the settings, the address book screen may appear. In this event, select [**Cancel**] to display the screen for sending.

2 Place the originals.

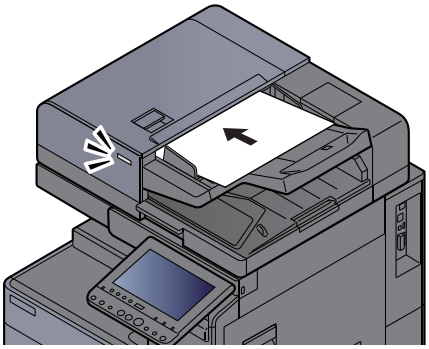

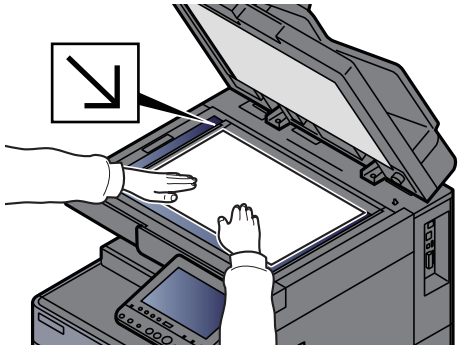

Loading Originals (page 5-2)

3 Display the screen.

Select [**WSD Scan/DSM Scan**].

If WSD Scan is set to [**Off**] in the network settings, select [**DSM Scan**] and go to step 5.

WSD Scan (page 8-56)

4 [DSM Scan] > [Next]

5 Select the scan process to be used > [OK].

Select [**Reload**] to reload the computer list.

To check the settings, select [**Detail**].

6 Change the settings and add destinations as needed.

Only E-mail addresses can be added as destinations.
In the send base screen, select [**Detail/Edit**], [**Destination**], and then [**Address Book**] or [**E-mail Addr Entry**], and add a destination.
In some scan processes, it may not be possible to change settings or add destinations.

7 Press the [Start] key.

Sending starts.

Scanning with File Management Utility

"FMU Connection" is installed on the machine as a standard application.

FMU Connection can be used to scan an original according to the settings configured with "File Management Utility" on the provided DVD, and save the image data and scanning information on a specified server or in a specified folder. Unlike regular transmission functions, this application lets you use metadata such as the scan date and time and the data format.

Configuring Settings before Sending

The first time you use FMU Connection, you must activate it in System Menu.

Application (page 8-75)

To use this function, you must install File Management Utility on your computer and configure settings for the multifunction machine to be used, scanning conditions, and the file save location. To install File Management Utility, refer to the following.

Installing Software (page 2-45)

NOTE

For information on using File Management Utility, refer to the following:

File Management Utility User Guide

Using FMU Connection to Scan an Original

1 Make sure that File Management Utility is running on the computer (or server) on which File Management Utility is installed.

2 Place the original.

3 Select [FMU Connection].

FMU Connection starts.

4 Follow the on-screen instructions to enter the necessary information and select [Next].

5 When the scan settings screen appears, press each item and configure the necessary settings.

The features that can be set depend on File Management Utility.

6 Press the [Start] key.

Sending starts.

Sending to Different Types of Destinations (Multi Sending)

You can specify destinations that combine E-mail addresses, folders (SMB or FTP), fax numbers and i-FAX. This is referred to as Multi Sending. This is useful for sending to different types of destination (E-mail addresses, folders, etc.) in a single operation.

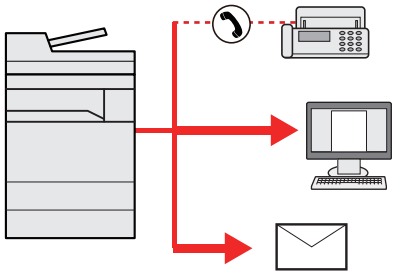

No. of broadcast items: Up to 500

However, number of items are restricted for the following sending options.

- E-mail: Up to 100
- Folders (SMP, FTP): Total of 10 SMB and FTP
- i-FAX: Up to 100

Also, depending on the settings, you can send and print at the same time.

Procedures are the same as used in specifying the destinations of respective types. Continue to enter E-mail address or folder path so that they appear in the destination list. Press the [**Start**] key to start transmission to all destinations at one time.

NOTE

- If the destinations include a fax, the images sent to all destinations will be black and white.
- If [**Prohibit**] is set to “Broadcast”, multiple destinations cannot be specified.

Broadcast (page 8-35)

Send to Me (E-mail)

When user login is enabled, the document is sent to the E-mail address of the logged in user.

Configuring Settings before Sending

To use this function, configure the followings.

To use this function, the function icon must be displayed in the home screen.

Editing the Home Screen (page 2-15)

An E-mail address must be set in user login for the user who logs in.

Adding a User (Local User List) (page 9-8)

Sending a Document to the Mail Address of the Logged In User

1 **Select [Home] key.**

2 **Select [Send to Me (E-mail)].**

Canceling Sending Jobs

1 Select the [Stop] key with the send screen displayed.

2 Cancel a job.

When there is a job is being scanned

Job Cancel appears.

When there is a job sending or on standby

Canceling job screen appears.
Select the job you wish to cancel > [**Cancel**] > [**Yes**]

NOTE

Selecting the [**Stop**] key will not temporarily stop a job that you have already started sending.

Handling Destination

This section explains how to select and confirm the destination.

Specifying Destination

Select the destination using either of the following methods except entering address directly:

- Choosing from the Address Book
  Choosing from the Address Book (page 5-43)
- Choosing from the External Address Book
  For details on the External Address Book, refer to the following:
  Command Center RX User Guide
- Choosing from One Touch key
  Choosing from the One Touch Key (page 5-45)
- Choosing from the Speed Dial
  Choosing from the Speed Dial (page 5-45)
- Choosing from the FAX
  FAX Operation Guide

NOTE

- You can set the machine up so that the address book screen appears when you select the [**Send**] key.
  Default Screen (page 8-34)
- If you are using the products equipped with the fax function, you can specify the fax destination. Enter the other party number using the numeric keypad.

Choosing from the Address Book

For more information about how to register destinations in the Address Book, refer to the following:

Registering Destinations in the Address Book (page 3-30)

1 In the basic screen for sending, select [Address Book].

NOTE

For details on the External Address Book, refer to the following:

Command Center RX User Guide

2 Select the destinations.

Select the checkbox to select the desired destination from the list. The selected destinations are indicated by a checkmark in the check box. To use an address book on the LDAP server, select "Addr Book" [**Ext Address Book**].

You can change the order in which the destinations are listed by selecting [**Name**] or [**No.**] from the "Sort".

NOTE

- To deselect, select the checkbox again and remove the checkmark.
- If [**Prohibit**] is set to “Broadcast”, multiple destinations cannot be selected. This also applies to a group in which multiple destinations are registered.

Broadcast (page 8-35)

Destination Search

Destinations registered in the Address Book can be searched. Advanced search by type or by initial letter is also available.

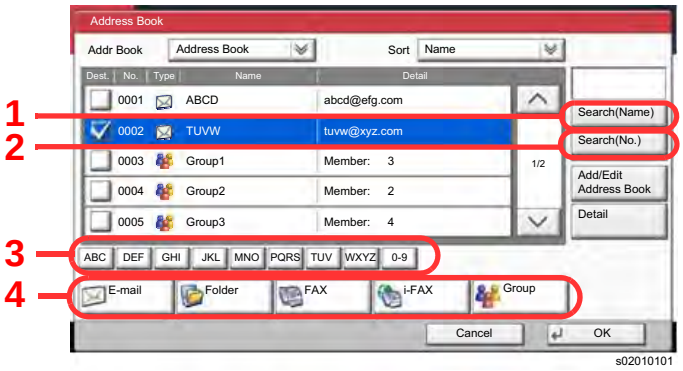

Keys used	Search type	Subjects searched
1	Search by name	Search by registered name.
2	Search by number	Search by registered address number.
3	Advanced search by initial letter	Advanced search by initial letter of registered name.
4	Advanced search by destination	Advanced search by type of registered destination (E-mail, Folder (SMB/FTP), FAX, i-FAX or Group). (FAX: Only when the optional FAX Kit is installed. i-FAX: Only when the optional Internet FAX Kit is activated.) You can set this function up so that destination types are selected when the address book is displayed. For details, refer to the following: Narrow Down (page 8-67)

3 Accept the destination > [OK]

Destinations can be changed later.

Confirmation Screen of Destinations (page 5-47)

NOTE

- To delete the destination, select the destination you want to delete and select [**Delete**].
- You can set the default "Sort" settings.

Sort (page 8-67)

Choosing from the One Touch Key

In the basic screen for sending, select the One Touch Keys where the destination is registered.

NOTE

If the One Touch Keys for the desired destination is hidden on the touch panel, select [∧] or [∨] to scroll and view next or previous One Touch Keys. This procedure assumes that One Touch Keys have already been registered. For more information on adding One Touch keys, refer to the following:

Adding a Destination on One Touch Key (One Touch Key) (page 3-37)

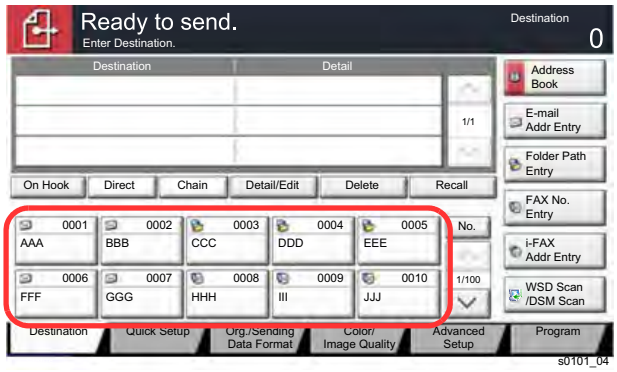

Choosing from the Speed Dial

Access the destination by specifying the 4-digit (0001 to 1000) One Touch Key number (speed dial).

In the basic screen for sending, select [**No.**] or the Quick No. Search key on the numeric keypad and use the numeric keys to enter the speed dial number in the numeric entry screen.

NOTE

If you entered the speed dial in 1 to 3-digit, select [**OK**].

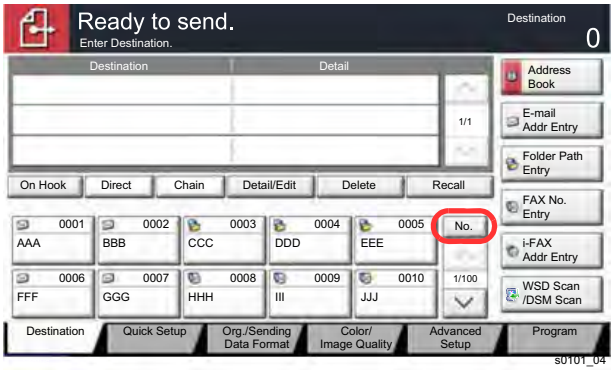

Checking and Editing Destinations

1 Display the screen.

Specify the destination.

Specifying Destination (page 5-43)

2 Check and edit the destination.

Select a destination and select [**Detail/Edit**] to check it. The entered addresses can be edited if they have been specified.

Select a destination and select [**Delete**] to remove the destination from the list..

NOTE

- When selecting [**On**] for Entry Check for New Destination, the confirmation screen appears. Enter the same destination again, and select [**OK**].

  Entry Check for New Dest. (page 8-34)

- When selecting [**On**] for Destination Check before Send, the confirmation screen appears after pressing the [**Start**] key.

  Dest. Check before Send (page 8-34)

  Confirmation Screen of Destinations (page 5-47)

Confirmation Screen of Destinations

When selecting [**On**] for Destination Check before Send, the confirmation screen of destinations appears after pressing the [**Start**] key.

Dest. Check before Send (page 8-34)

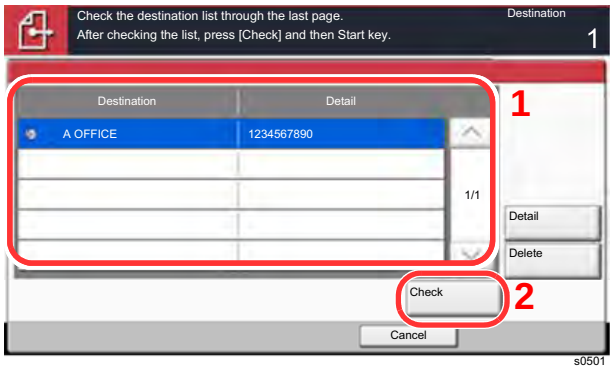

1 Select [∨] or [∧] to confirm all destination.

Selecting [**Detail**] shows the detailed information of the selected destination.

To delete the destination, select the destination you want to delete > [**Delete**] > [**Yes**]

To add the destination, select [**Cancel**] and then return to the destination screen.

2 Select [**Check**].

NOTE

Be sure to confirm all destination by displaying them on the touch panel. You cannot select [**Check**] unless you have confirmed all destination.

Recall

Recall is a function allowing you to send the last entered destination once again. When you want to send the image to the same destination, select [**Recall**], and you can call the destination you sent on the destination list.

1 Select [Recall].

The destination you sent is displayed on the destination list.

NOTE

When the last sending included FAX, folders and E-mail destinations, they are also displayed. If necessary, add or delete the destination.

2 Press the [Start] key.

Sending starts.

NOTE

- When [**On**] is selected in "Dest. Check before Send", a destination confirmation screen is displayed when you press the [**Start**] key.

  Confirmation Screen of Destinations (page 5-47)

- Recall information is canceled in the following conditions.

  - When you turn the power off
  - When you send a next image (new recall information is registered)
  - When you log out

How to use the FAX Function

On products with a FAX function, it is possible to use the FAX function. The optional FAX Kit is required in order to make use of FAX functionality.

FAX Operation Guide

Using Document Boxes

Document Box is a function for saving print data from a computer and sharing it with multiple users.

The available Document Boxes are as follows: Custom Box, Job Box, Removable Memory Box, and Fax Box.

What is Custom Box?

Custom Box is a component box which you can create within the Document Box and store data for later retrieval. You can create or delete a Custom Box.

The following operations are possible:

- Creating a new Custom Box
- Printing Document in a Custom Box
- Saving scanned documents to a Custom Box
- Sending Documents in a Custom Box
- Editing Documents in a Custom Box
- Deleting Documents in a Custom Box

NOTE

The operation on Custom Box you perform from operation panel can also be made using Command Center RX.

Command Center RX User Guide

What is Job Box?

Job Box is a generic name for the "Private Print/Stored Job Box", "Quick Copy/Proof and Hold Box", "Repeat Copy Box", and "Form for Form Overlay Box". These Job Boxes cannot be created or deleted by a user.

NOTE

- You can set up the machine so that temporary documents in job boxes are automatically deleted.
  Deletion of Job Retention (page 8-39)
- For details on operating the Job Box, refer to the following:
  Printing Data Saved in the Printer (page 4-18)

Repeat Copy Box

Repeat Copy feature stores the copied original document data in the Job Box and allows you to print additional copies later. By default, up to 32 documents can be stored. When power is turned off, all stored jobs will be deleted.

Outputting Repeat Copy Jobs (page 5-65)

NOTE

Repeat Copy function is not available when the optional Data Security Kit is installed.

Form for Form Overlay Box

Image Overlay feature copies the original document overlaid with a form or image. This Job Box is used to store the forms or images for overlaying.

Form for Form Overlay (page 5-65)

What is Removable Memory Box?

A USB memory stick can be connected to the USB memory slot on the machine to print a saved file. You can print data directly from the USB memory without a PC. Image files scanned using this machine can also be saved to USB memory in the PDF, TIFF, JPEG, XPS, OpenXPS or high compression PDF format (Scan to USB).

Fax Box

Fax Box store the fax data. The optional FAX Kit is required in order to make use of FAX functionality.

FAX Operation Guide

Basic Operation for Document Box

This section explains basic operations for document boxes, using examples where tasks are carried out with custom boxes.

NOTE

In the following explanation, it is assumed that user login administration is enabled. For details on User Logon privileges, refer to the following:

Editing Custom Box (page 5-56)

Box List

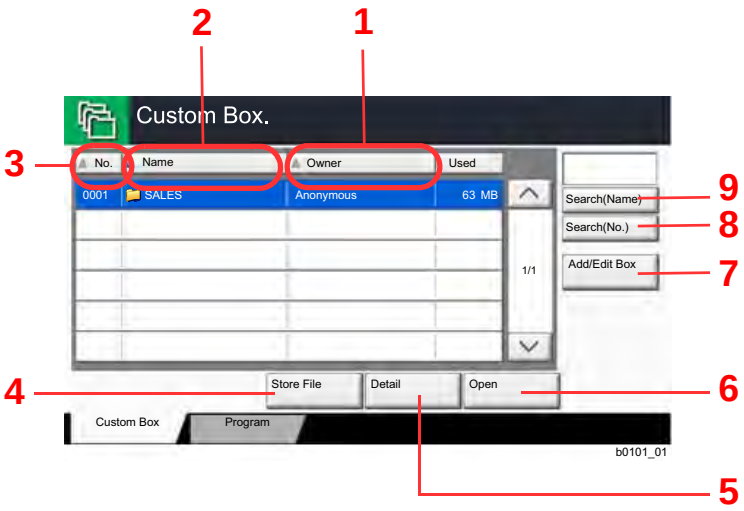

1 Listing the boxes by owner in alphabetical order.

2 Listing the boxes by name in alphabetical order.

3 Listing the boxes by number in ascending/ descending order.

4 Saves the document in the selected box.

5 Displays the details for the selected box.

6 Opens the selected box.

7 Registers new boxes and checks, modifies or deletes box information.

8 A box can be searched for by Box No.

9 A box can be searched for by Box Name.

Document List

The document list is a list of the documents stored in the custom box. Documents can be listed either by name or as thumbnails. The list can be used as shown below.

List

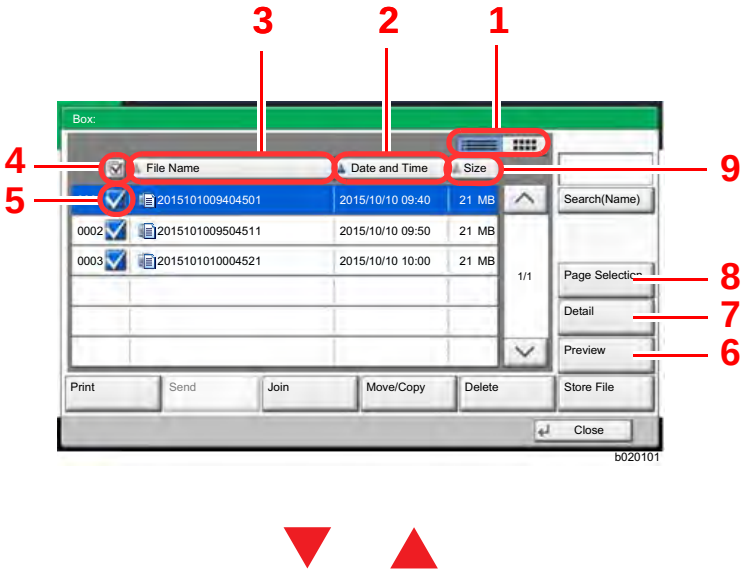

1 Switches between list display and thumbnail display.

2 Listing the documents by time of update in ascending/descending order.

3 Listing the documents by name in alphabetical order.

4 Selecting more than one document at a time.

5 Selecting documents by checking checkboxes.

6 Previews the selected document.

7 Select a document in the Document List and select [**Detail**] to display the details for the selected document.

8 Select a document in the Document List and select [**Page Selection**] to display the selected document.

9 Listing the documents by size in ascending/descending order.

Thumbnail

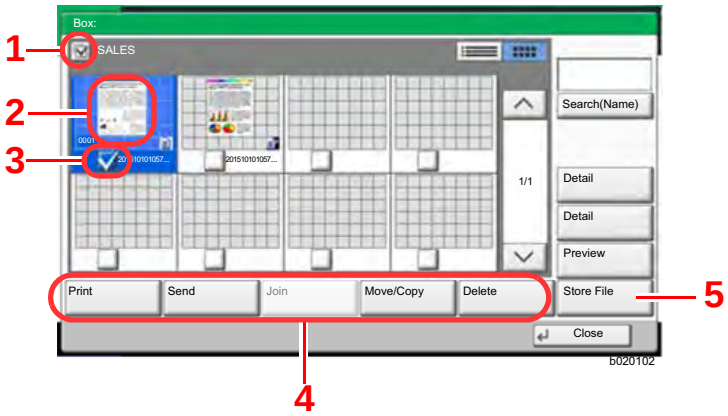

1 Selecting more than one document at a time.

2 Highlighting a document to display its details with [**Detail**].

3 Selecting documents by checking checkboxes.

4 Prints, sends, joins, moves, copies or deletes the selected documents.

5 Saves the document in the open box.

NOTE

You can select multiple documents by pressing the respective document checkboxes. However, note that you cannot select multiple documents when you are sending documents.

Viewing Box Details

1 Select [Add/Edit Box] in the box list screen.

2 Highlight the box whose box details you wish to check and select [Detail/Edit].

> **NOTE**
> If a custom box is protected by a password, enter the correct password.

3 Check the box details.

4 [Cancel] > [Close]

The display returns to the default Document Box screen.

Editing Box Details

1 Select [Add/Edit Box] in the box list screen.

2 Highlight the box whose box details you wish to check and select [Detail/Edit].

> **NOTE**
> If a custom box is protected by a password, enter the correct password.

3 Check the box details.

To edit details, select [**Change**] of the detail you wish to edit. Edit the detail as desired and select [**OK**].

4 If you have changed the details, select [Save] and then select [Yes] in the confirmation screen.

If you do not change the details, select [**No**].

5 Select [Close].

The display returns to the default Document Box screen.

Previewing Documents/Checking Document Details

1 Select (highlight) a document to preview and then select [Preview] or [Detail].

2 Preview the document or check the document details.

The operations available in the preview screen are shown below.

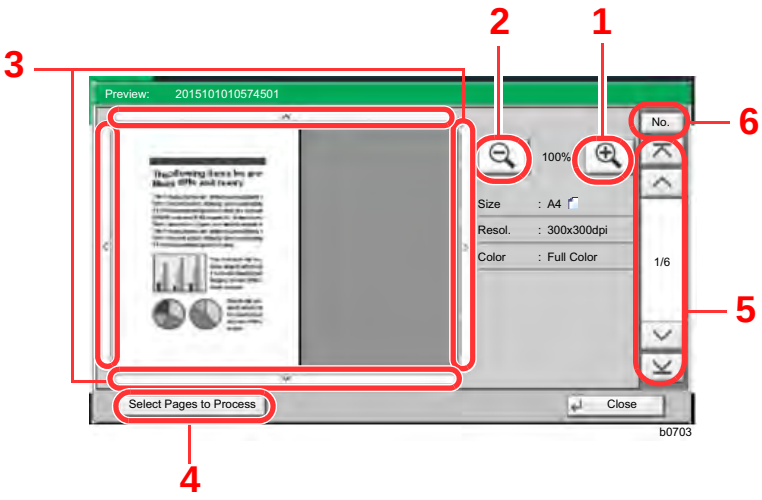

1 Zoom in.

2 Zoom out.

3 When you have zoomed in, you can use these keys to move the displayed area.

4 Press to select any page of the open document and print, send or copy to removable memory.

Selecting a page (page 5-54)

5 In multiple-page documents, you can use these buttons to change pages.

6 In multiple-page documents, you can change pages by entering the desired page number.

NOTE

The preview display can be controlled by moving your finger(s) on the touch panel.

Original Preview (page 2-20)

3 Confirm the document(s) and select [Close].

Selecting a page

When printing, sending, or copying a document within a Custom Box, you can specify any pages at will.
Select [**Page Selection**] in the document list screen of the Custom Box, or [**Select Pages to Process**] in the Preview screen, to display the page selection screen.
Select the pages you want to work with, and select [**Print**], [**Send**], or [**Copy to Memory**].

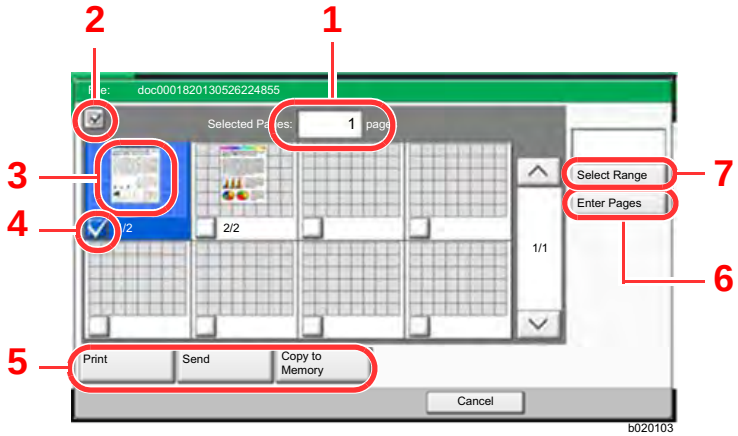

1 Displaying the number of pages selected.

2 Selecting more than one document at a time.

3 Highlighting the selected document.

4 Selecting documents by checking checkboxes.

5 Selected pages can be printed, sent, or copied to custom box.

6 You can specify the pages you want to select by selecting [**Enter Pages**].

7 You can specify a range of selection by selecting [**Select Range**].

Printing Documents in Custom Box (page 5-58)
Sending Documents in Custom Box (page 5-59)
Moving Documents in Custom Box (page 5-62)

Creating a New Custom Box

NOTE

- If user login administration is enabled, you can only change the settings by logging in with administrator privileges. The factory default login user name and login password are set as shown below.

Model Name	Login User Name	Login Password
2552ci	2500	2500
3252ci	3200	3200
4052ci	4000	4000
5052ci	5000	5000
6052ci	6000	6000

- If user login administration is enabled, log in with administrator privileges to perform the following operations. They cannot be performed with user privileges.
  - Creating a box
  - Deleting a box of which owner is another user.

1 Display the screen.

1 [**Home**] key > [**Custom Box**] > [**Add/Edit Box**]

2 Register the Custom Box.

1 [**Add**] > Enter the information for each item > [**OK**]

The table below lists the items to be set.

Item	Description
Box No.	Enter the box number by selecting [**+**], [**-**] or number keys. The box number can be from 0001 to 1000. A Custom Box should have a unique number. If you enter 0000, the smallest number available will be automatically assigned.
Box Name	Enter a box name consisting of up to 32 characters. Character Entry Method (page 11-10)
Owner[*1]	Set the owner of the box. Select the owner from the user list that appears.
Permission[*2]	Select whether to share the box.
Box Password	User access to the box can be restricted by specifying a password to protect the box. Entering a password is not mandatory. Enter the same password of up to 16 characters in both [**Password**] and [**Confirm Password**]. This can be set if [**Shared**] is selected in Permission.
Usage Restriction	The usage for a box can be restricted. To enable a capacity restriction enter a value for the storage capacity of the Custom Box in megabytes by selecting [**-**], [**+**] or number keys. You can enter a limit between 1 and 30,000 (MB).

Item	Description
Auto File Deletion	Automatically deletes stored documents after a set period of time. Select [**On**] to enable automatic deletion and then use [**+**] and [**-**] or the numeric keys to enter the number of days for which documents are stored. You can enter any number between 1 and 31 (day(s)). To disable automatic file deletion, select [**Off**].
Free Space	Displays the free space on the box.
Overwrite Setting	Specifies whether or not old stored documents are overwritten when new documents are stored. To overwrite old documents, select [**Permit**]. To retain old documents, select [**Prohibit**].
Delete after Printed	Automatically delete a document from the box once printing is complete. To delete the document, select [**On**]. To retain the document, select [**Off**].

*1 Displayed when the user login administration is enabled.
*2 Not displayed when "Owner" is set to [**No Owner**].

2 Select [**Add**].

The Custom Box is created.

Editing Custom Box

1 Display the screen.

[**Home**] key > [**Custom Box**] > [**Add/Edit Box**]

2 Edit the custom box.

1 Select the box > [**Detail/Edit**] > Enter the information for each item > [**OK**] > [**Edit**]

NOTE

- When you have logged in as a user, you can only edit a box whose owner is set to that user.
- When you have logged in as administrator, you can edit all boxes.

When user login administration is enabled, the settings that can be changed varies depending on the privileges of the logged in user.

Privileges	Settings that can be changed
Administrator	Box Name
	Box No.
	Owner
	Permission
	Box Password
	Usage Restriction
	Auto File Deletion
	Overwrite Setting
	Delete after Printed

Privileges	Settings that can be changed
User	Box Name
	Box Password
	Permission
	Auto File Deletion
	Overwrite Setting
	Delete after Printed

Creating a New Custom Box (page 5-55)

3 [Save] > [Close]

The display returns to the default Document Box screen.

Deleting Custom Box

1 Display the screen.

[**Home**] key > [**Custom Box**] > [**Detail/Edit**]

2 Delete the custom box.

Select the box > [**Delete**] > [**Yes**]

NOTE

- When you have logged in as a user, you can only delete a box whose owner is set to that user.
- When you have logged in as administrator, you can edit all boxes.

Storing Documents to a Custom Box

Custom box stores the print data which is sent from a PC. For the operation of the printing from the PC, refer to the following:

Printer Driver User Guide

Printing Documents in Custom Box

1 Display the screen.

1 [**Home**] key > [**Custom Box**]

2 Select the box containing the document you want to print.

> **NOTE**
> If a custom box is protected by a password, enter the correct password.

3 Select [**Open**].

2 Print the document.

1 Select the document in the list that you want to print by selecting the checkbox.

The document is marked with a checkmark.

> **NOTE**
> To deselect, select the checkbox again and remove the checkmark.

2 Select [**Print**].

3 Set the paper selection, duplex printing, etc., as desired.

For the features that can be selected, refer to the following:

Custom Box (Store File, Printing, Send) (page 6-8)

> **NOTE**
> Select the [**Program**] tab when registering or recalling programs.
> Registering Programs (page 5-12)
> Recalling Programs (page 5-12)

If a document stored from a computer is selected, the print settings selection screen appears.

- To use the settings used at the time of printing (when the document was saved), select [**Print As Is**]. Select [**Start Print**] to start printing.
- To change the print settings, select [**Print after Change Settings**] and change the print settings.
  After a document saved in the machine is selected, the [**Use File Settings**] key may appear in the setting screen for the feature to be used.
- To use the settings saved with the document, select [**Use File Settings**].
- If you need to change the print settings, select [**Print after Change Settings**].

4 Press the [**Start**] key.

Printing of the selected document begins.

Saving Scanned Documents to a Custom Box

1 Display the screen.

[**Home**] key > [**Custom Box**]

2 Place the originals.

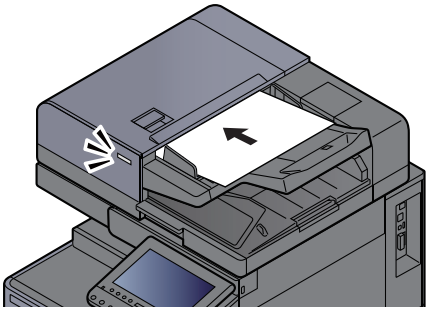

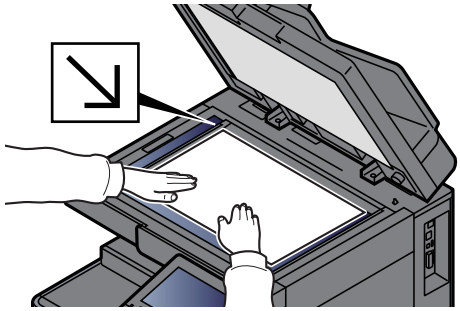

Loading Originals (page 5-2)

3 Store the document.

1 Select the box > [**Store File**]

2 Select the functions.

To configure the settings for functions, select the function key. By selecting [**tabs**], other selectable functions will be shown as a list.

Custom Box (Store File, Printing, Send) (page 6-8)

NOTE

- Enter up to 32 characters as the file name.
- Select the [**Program**] tab when registering or recalling programs.

Registering Programs (page 5-12)
Recalling Programs (page 5-12)

3 Press the [**Start**] key.

The original is scanned and the data is stored in the specified Custom Box.

Sending Documents in Custom Box

When transmitting using wireless LAN, select the interface dedicated to the send function in advance.

Primary Network (Client) (page 8-62)

1 Display the screen.

[**Home**] key > [**Custom Box**] > Select the box > [**Open**]

NOTE

If a custom box is protected by a password, enter the correct password.

2 Send the document.

1 Select the document you wish to send by checking the checkbox.

The document is marked with a checkmark.

NOTE

You cannot select and send multiple documents.
To deselect, press the checkbox again and remove the checkmark.

2 Select [**Send**].

NOTE

Depending on the settings, the address book screen may appear.

3 Set the destination.

For more information on selecting destinations, refer to the following:

Specifying Destination (page 5-43)

4 Set the sending size, original image, etc., as desired.

For the features that can be set, refer to the following:

Custom Box (Store File, Printing, Send) (page 6-8)

NOTE

Select the [**Program**] tab when registering or recalling programs.

Registering Programs (page 5-12)

Recalling Programs (page 5-12)

5 Press the [**Start**] key.

Sending of the selected document begins.

Sending Documents in Custom Box to E-mail Address of Logged In User.

When user login is enabled, documents in the custom box are sent to the E-mail address of the logged in user.

Setting before send

Before using this function, the following are necessary.

- The function icon must be displayed in the home screen.
  Editing the Home Screen (page 2-15)
- An E-mail address must be set in user login for the user who logs in.
  Adding a User (Local User List) (page 9-8)

Sending to the E-mail address of the logged in user.

When user login is enabled, documents in the custom box are sent to the E-mail address of the logged in user.

Send to the E-mail address of the logged in user. The procedure is as follows.

1 **Select [Home] key.**

2 **Select [Send to Me from BOX (E-mail)].**

> **NOTE**
> When this function is used, functions other than transmission cannot be used.

Moving Documents in Custom Box

1 Display the screen.

[**Home**] key > [**Custom Box**] > Select the box > [**Open**]

> **NOTE**
> If a custom box is protected by a password, enter the correct password.

2 Move the documents.

1 Select the document in the list that you want to move by selecting the checkbox.

The document is marked with a checkmark.

> **NOTE**
> To deselect, select the checkbox again and remove the checkmark.

2 [**Move/Copy**] > [**Move to Custom Box**] > [**Next**] > select the destination of move > [**Move/Copy**] > [**OK**]

The selected document is moved.

> **NOTE**
> If the box to which the document is to be moved is protected by a password, enter the correct password.

Copying Documents in Custom Box into Other Boxes

1 Display the screen.

[**Home**] key > [**Custom Box**] > Select the box > [**Open**]

> **NOTE**
> If a custom box is protected by a password, enter the correct password.

2 Copy the documents.

1 Select the document in the list that you want to copy by selecting the checkbox.

The document is marked with a checkmark.

> **NOTE**
> To deselect, select the checkbox again and remove the checkmark.

2 [**Move/Copy**] > [**Copy to Custom Box**] > [**Next**] > select the destination of copy > [**Copy**] > [**OK**]

The selected document is copied.

> **NOTE**
> If the box to which the document is to copied is protected by a password, enter the correct password.

Copying Documents in Custom Box to Removable Memory

1 Display the screen.

[**Home**] key > [**Custom Box**] > Select the box > [**Open**]

NOTE
If a custom box is protected by a password, enter the correct password.

2 Copy the documents.

1 Select the document in the list that you want to copy by selecting the checkbox.

The document is marked with a checkmark.

NOTE
To deselect, select the checkbox again and remove the checkmark.

2 [**Move/Copy**] > [**Copy to Removable Memory**] > [**Next**] > select the destination of copy > [**Next**] > [**Copy**] > [**OK**]

The selected document is copied.

Joining Documents in Custom Box

You can join documents within a custom box into one file.

NOTE
You can only join a document to other documents in the same custom box. If necessary, move the documents to be joined beforehand.

1 Display the screen.

[**Home**] key > [**Custom Box**] > Select the box > [**Open**]

NOTE
If a custom box is protected by a password, enter the correct password.

2 Join the document.

1 Select the documents in the list that you wish to join by selecting the checkbox.

The document is marked with a checkmark.

You can join up to 10 documents.

NOTE
To deselect, select the checkbox again and remove the checkmark.

2 Select [**Join**].

3 Arrange the documents into the order in which they are to be joined.

Highlight the document you want to rearrange and select [**Up**] or [**Down**] to move it to the correct place in the sequence.

4 [**Next**] > [**File Name**] > Enter the file name for the joined document > [**OK**]

NOTE

Enter up to 64 characters as the file name.

5 [**Join**] > [**Yes**]

The documents are joined.

NOTE

After joining, the original documents are left unchanged. Delete the documents if they are no longer needed.

Deleting Documents in Custom Box

1 Display the screen.

1 [**Home**] key > [**Custom Box**]

2 Select the box containing the document > [**Open**]

NOTE

If a custom box is protected by a password, enter the correct password.

2 Delete the document.

1 Select the document in the list that you want to delete by selecting the checkbox.

The document is marked with a checkmark.

NOTE

- [**Delete**] is disabled until a document is selected.
- To deselect, select the checkbox again and remove the checkmark.

2 [**Delete**] > [**Yes**]

The document is deleted.

Job Box

This section explains the Repeat Copy Box and the Form for Form Overlay Box. For Private Print/Stored Job Box and Quick Copy/Proof and Hold Box, refer to the following:

Printing Data Saved in the Printer (page 4-18)

Outputting Repeat Copy Jobs

Repeat Copy feature stores the copied original document data in the Job Box and allows you to print additional copies later. By default, up to 32 documents can be stored. When power is turned off, all stored jobs will be deleted. This section explains how to print documents saved by the Repeat Copy function.

Repeat Copy (page 6-72)

1 Display the screen.

1. [**Home**] key > [**Job Box**]
2. [**Repeat Copy**] > [**Open**]

2 Print the document.

1. Select the document to print > [**Print**]

   If the document is protected by a password, enter the password using the numeric keys.

2. Specify the number of copies to print as desired > [**Start Print**]

   Printing begins.

   The Repeat Copy box job will be deleted when the power switch is turned off.

Form for Form Overlay

Image Overlay feature copies the original document overlaid with a form or image. This Job Box is used to store the forms or images for overlaying.

Storing a Form

You can store forms to be used for the form overlay in the job box. One page can be registered in one form.

1 Place the original.

2 Display the screen.

1. [**Home**] key > [**Job Box**]
2. [**Form for Form Overlay**] > [**Open**]

3 Store the forms.

1. Select [**Store File**].
2. If necessary, select the image quality of original, scanning density, etc. before the original is scanned.
3. Press the [**Start**] key.

   The original is scanned and stored in the [**Form for Form Overlay**] box.

Deleting a Form Stored

You can delete the form stored in the job box

1 Display the screen.

1. [**Home**] key > [**Job Box**]
2. [**Form for Form Overlay**] > [**Open**]

2 Delete the forms.

Select the form to delete > [**Delete**] > [**Yes**]

The form is deleted.

Operating using Removable USB Memory

Plugging USB memory directly into the machine enables you to quickly and easily print the files stored in the USB memory without having to use a computer.

The following file types can be printed:

- PDF file (Version 1.7 or older)
- TIFF file (TIFF V6/TTN2 format)
- JPEG file
- XPS file
- OpenXPS file
- Encrypted PDF file

In addition, you can store scanned image files in USB memory connected to the machine.

The following file types can be stored:

- PDF file format
- TIFF file format
- JPEG file format
- XPS file format
- OpenXPS file format
- High-compression PDF file format

Printing Documents Stored in Removable USB Memory

NOTE

- PDF files you wish to print should have an extension (.pdf).
- Files to be printed should be saved no further down than the top 3 folder levels, including the root folder.
- Use USB memory properly formatted by this machine.
- Plug the USB memory directly into the USB Memory Slot.

1 Plug the USB memory.

1 Plug the USB memory into the USB Memory Slot.

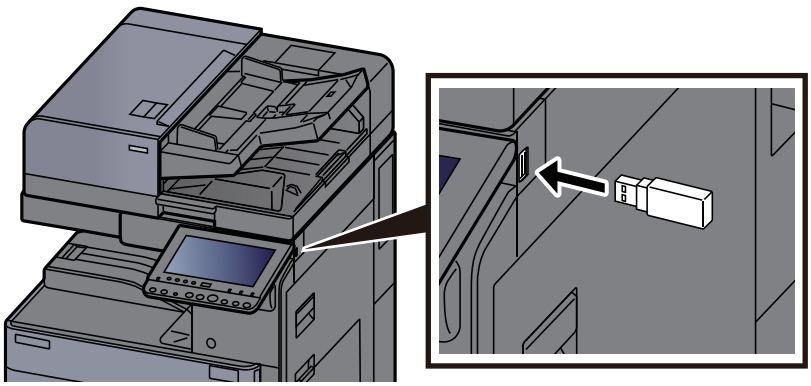

2 When the machine reads the USB memory, "Removable Memory is recognized. Displaying files. Are you sure?" may appear. Select [**Yes**].

Displays the removable memory screen.

NOTE

If the message does not appear, select [**Removable Memory**] on the Home screen.

2 Print the document.

1 Select the folder containing the file to be printed.

The machine will display documents in the top 3 folder levels, including the root folder.

NOTE

- 1,000 documents can be displayed.
- To return to a higher level folder, select [**Back**].

2 Select the file to be printed > [**Print**]

3 Change the number of copies, duplex printing, etc. as desired.

For the features that can be selected, refer to the following:

Removable Memory (Store File, Printing Documents) (page 6-14)

NOTE

After a document saved in the machine is selected, [**Use File Settings**] may appear in the setting screen for the feature to be used.

- To use the settings saved with the document, press [**Use File Settings**].
- If you need to change the print settings, select the desired feature.

4 Press the [**Start**] key.

Printing of the selected file begins.

Saving Documents to USB Memory (Scan to USB)

You can store scanned documents to a removal USB memory.

NOTE

The maximum number of the storable files is 1,000.

1 Place the originals.

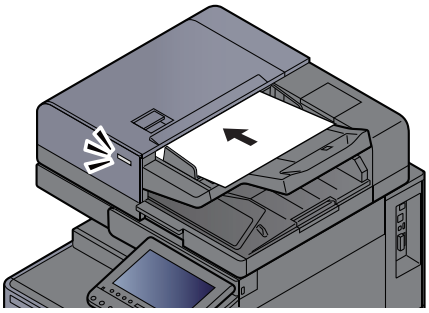

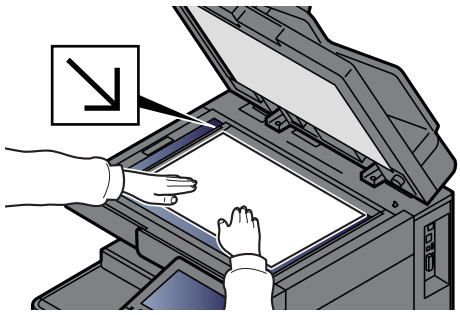

Loading Originals (page 5-2)

2 Plug the USB memory.

1 Plug the USB memory into the USB Memory Slot.

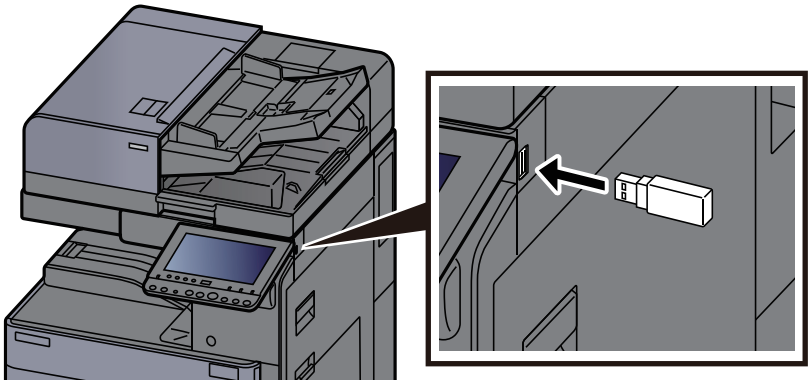

2 When the machine reads the USB memory, "Removable Memory is recognized. Displaying files. Are you sure?" may appear. Select [**Yes**] to display the removable memory screen.

Displays the Removable Memory screen.

NOTE

If the message does not appear, select [**Removable Memory**] on the Home screen.

3 Store the document.

1 Select the folder where the file will be stored > [**Open**].

The machine will display the top 3 folder levels, including the root folder.

2 Select [**Store File**].

3 Set the type of original, file format, etc., as desired.

For the features that can be set, refer to the following:

Removable Memory (Store File, Printing Documents) (page 6-14)

4 Check the storing image.

5 Press the [**Start**] key.

The original is scanned and the data is stored in the USB memory.

Check the USB Memory Information

1 In the removable memory screen, select [Memory Information].

2 Once you confirm the information, select [Close].

Removing USB Memory

IMPORTANT

Be sure to follow the proper procedure to avoid damaging the data or USB memory.

1 Display the screen.

[**Home**] key > [**Remove Memory**]

2 Select [Remove Memory].

Select [**OK**], and remove the USB memory after "Removable Memory can be safely removed." is displayed.

NOTE

USB memory can also be removed after checking the status of the device.

Device/Communication (page 7-13)

Using the Internet Browser

If the machine is connected to the network, you can browse the Internet on the touch panel.

NOTE

To use the internet browser, "Internet Browser Setting" must be set to [**On**] in Internet.

Internet (page 8-75)

Launching and Exiting the Browser

Display the screen.

1 [**Home**] key > [**Internet Browser**]

The Internet browser starts up.

2 Use the browser screen to browse web pages.

For information on how to use the browser screen, refer to the following:

Using the Browser Screen (page 5-72)

3 To exit the browser, select [**X**] (Close) and then select [**Yes**] in the exit confirmation screen.

NOTE

You can specify preferences such as the way the Internet browser screen is displayed.

Browser Environment (page 8-75)

Using the Browser Screen

The operations available in the Internet browser screen are shown below.

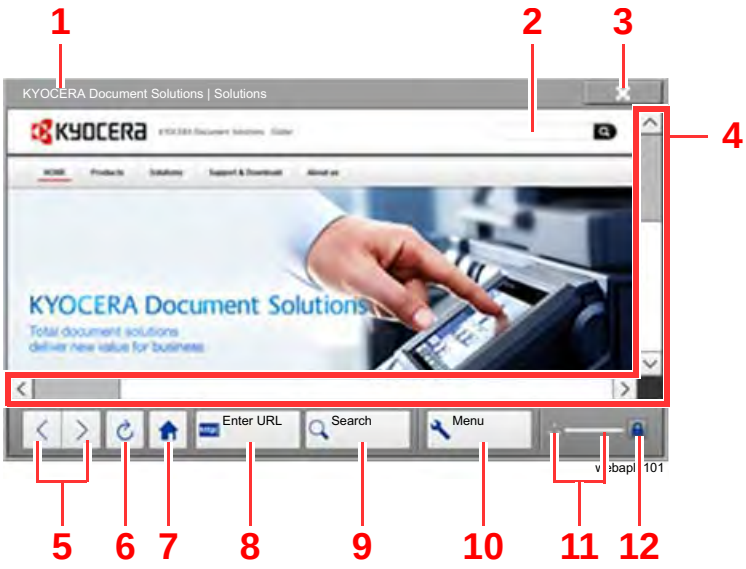

1 **Title bar**: Displays the page title.

2 **Text box**: Pressing the text box displays a keyboard that allows you to type text.

3 **Close**: Closes the Internet browser and returns you to the application list screen.

4 **Scroll bars**: These allow you to scroll the displayed page up, down, left and right by selecting [∧], [∨], [<] or [>] or by moving one of the slide bars with your finger.

5 **Back/Forward**: Displays the previous page or the next page.

6 **Reload**: Updates the page.

7 **Home page**: Displays your specified home page. You can set your home page.

Browser Environment (page 8-75).

8 **Enter URL**: Use this to display a desired web page by entering the URL for that page.

9 **Search (Search Internet/Retrieval in page)**: Displays a search menu in which you can select "Retrieval in page" or an Internet search site.

Search Internet: Use the selected search site to search with the entered keyword.

Retrieval in page: Search from the entered keyword in the currently displayed page. You can continue your search by selecting [**SearchUp**] or [**SearchDown**].

10 **Menu**: Displays the browser setup menu. You can use this menu to specify the browser's display magnification, set the text encoding scheme and check the server certificate.

11 **Loader/Progress bar**: Shows the status of page loading. When the browser is loading a web page, the loader changes to an animated display.

12 **Security lock icon**: Displayed when you are viewing a protected page.

NOTE

Selecting the [**Reset**] key while the Internet browser is displayed will exit the browser and return you to the application list screen without displaying the browser exit.

Manual Staple

You can staple copied paper manually without any print operation. It is useful when you have forgotten to set the staple sort mode before starting copying, or when you want to staple originals.

NOTE

- This function requires the optional Document Finisher:
  4,000-Sheet Finisher (page 11-29)
- If there are no staples when manual stapling is performed, the stapling position lamps and stapling position key LEDs all blink. Add staples.
  Replacing Staples (4,000-Sheet Finisher) (page 10-13)
- Manual stapling cannot be executed when the machine is in operation.

Maximum number of sheets available for manual stapling

Paper size	Paper weight	
	52 - 90 g/m^2 (14.0 - 24.0 lb. Bond)	91 - 105 g/m^2 (24.3 - 28.0 lb. Bond)
A4, A4-R, B5, Letter, Letter-R, 16K	65 sheets	55 sheets
A3, B4, Folio, Ledger	30 sheets	30 sheets

Use the keys on the control section of the Finisher (optional) for manual stapling.

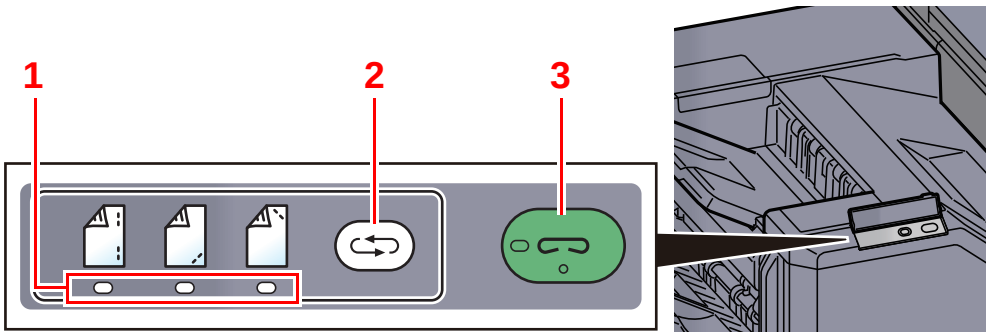

1 Stapling position lamps
2 Stapling position key
3 Stapling key / lamp

1 Press the stapling position key on the stapling control section.

The shutter of the paper exit area is opened and this equipment enters into the manual staple mode.

2 Set the staple position.

Press the stapling position key to select the stapling position
(Back / Front / 2 Points).

Operation is not possible while the stapling position lamps are blinking. Operate after the lamps light solidly.

3 Load the paper.

Straighten the edges of the paper well and place the paper front side down in the shutter opening of the output unit.

If the near side of the paper ( ) will be stapled, place the paper against the front guide (A).

If the far side of the paper ( ) will be stapled, place the paper against the back guide (B).

If the edge of the paper ( ) will be stapled at two points, place the paper with the center aligned to the center point between the two side guides (A and B).

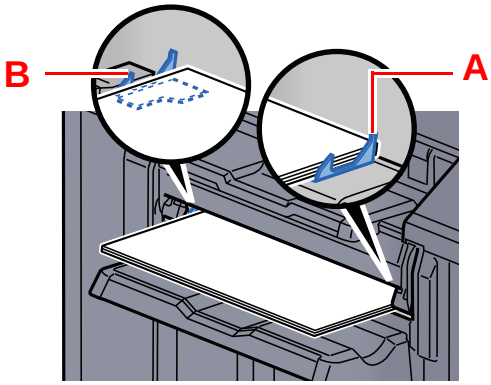

CAUTION

Do not insert your hand inside the open shutter.

NOTE

- Press the stapling position key before you place the paper. Once the paper is placed, the stapling position key cannot be used.
- The stapling lamp lights when the paper is properly placed. If it does not light, replace the paper.

4 Staple the paper.

Let go of the paper, and then press the stapling key.

Stapling starts. Stapling finishes and the output is delivered to tray.

CAUTION

Be sure that your hands are away from the paper while stapling is in progress.

Finishing the manual staple mode

Press the stapling position key several times until the stapling position lamps turn off. The shutter of the paper exit area closes. It means that manual stapling is finished.
If no operation is performed for approx. 10 seconds, the manual staple mode will be automatically finished.

NOTE

The time after which manual staple mode is automatically exited can be changed.

Manual Staple (page 8-28)

6 Using Various Functions

This chapter explains the following topics:

Functions Available on the Machine 6-2
About Functions Available on the Machine 6-2
How to Select Functions 6-2
Copy 6-2
Send 6-5
Custom Box (Store File, Printing, Send) 6-8
Removable Memory (Store File, Printing Documents) 6-14
Functions 6-17
Original Size 6-18
Paper Selection 6-19
Mixed Size Originals 6-20
Original Orientation 6-23
Fold 6-24
Collate/Offset 6-25
Staple/Punch 6-26
Paper Output 6-30
Density 6-31
Original Image 6-31
EcoPrint 6-32
Color Selection 6-32
Color Balance 6-34
Hue Adjustment 6-35
One-touch Image Adjust 6-36
Sharpness 6-38
Contrast 6-38
Background Density Adj. (Background Density Adjustment) 6-39
Saturation 6-39
Prevent Bleed-thru 6-40
Trapping 6-40
Zoom 6-41
Combine 6-44
Margin/Centering, Margin, Centering 6-46
Border Erase 6-47
Booklet 6-49
Duplex 6-52
Cover 6-55
Form Overlay 6-56
Erase Shadowed Areas 6-57
Page # 6-57
Insert Sheets/Chapters 6-59
Memo Page 6-60
Poster 6-61
Image Repeat 6-62
Text Stamp 6-63
Bates Stamp 6-66
Continuous Scan 6-69
Auto Image Rotation 6-69
Negative Image 6-70
Mirror Image 6-70
Job Finish Notice 6-70
File Name Entry 6-71
Priority Override 6-71
Repeat Copy 6-72
OHP Backing Sheet 6-73
DP Read Action 6-74
Skip Blank Page 6-74
2-sided/Book Original, Book Original 6-75
Sending Size 6-76
File Format 6-77
File Separation 6-81
Scan Resolution 6-81
E-mail Subject/Body 6-82
Send and Print 6-82
Send and Store 6-82
FTP Encrypted TX 6-83
File Size Confirmation 6-83
Delete after Printed 6-83
Delete after Transmitted 6-83
Storing Size 6-84
Long Original 6-84
Encrypted PDF Password 6-85
JPEG/TIFF Print 6-85
XPS Fit to Page 6-85

Functions Available on the Machine

About Functions Available on the Machine

This machine provides the various functions available.

How to Select Functions

To configure the settings for functions, select the tab and press the function key.

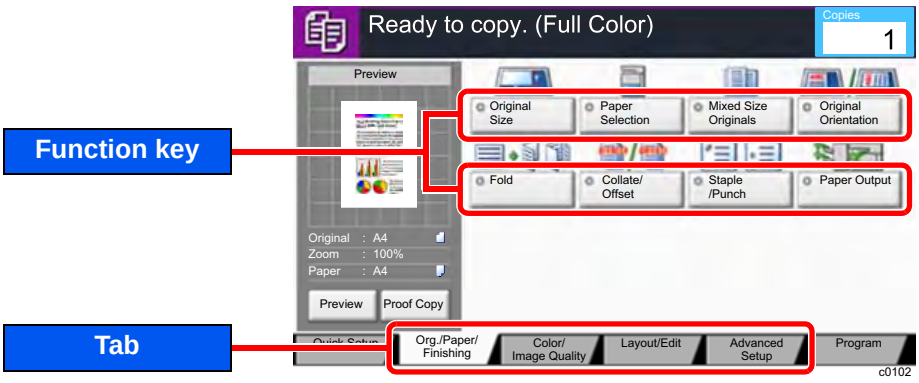

Copy

For details on each function, see the table below.

Tab	Function key	Description	Reference page
Org./Paper/ Finishing Configure the settings for originals, paper, and finishing such as collate and staple.	**Original Size**	Specify the original size to be scanned.	page 6-18
	Paper Selection	Select the cassette or multi-purpose tray that contains the required paper size.	page 6-19
	Mixed Size Originals	Scans the documents of different sizes that are set in the document processor at all once.	page 6-20
	Original Orientation	Select the orientation of the original document top edge to scan correct direction.	page 6-23
	Fold	Fold the finished documents.	page 6-24
	Collate/Offset	Offsets the output by page or set.	page 6-25
	Staple/Punch	Staples or punches printed documents.	page 6-26
	Paper Output	Specify the output tray.	page 6-30

Tab	Function key	Description	Reference page
Color/ Image Quality Configure the settings for density, quality of copies, and color balance.	**Density**	Adjust density.	page 6-31
	Original Image	Select original image type for best results.	page 6-31
	EcoPrint	EcoPrint saves toner when printing. Use this function for test prints or any other occasion when high quality print is not required.	page 6-32
	Color Selection	Select the color mode setting.	page 6-32
	Color Balance	Adjust the strength of cyan, magenta, yellow, and black.	page 6-34
	Hue Adjustment	Adjust the color (hue) of images.	page 6-35
	One-touch Image Adjust	Adjust images as desired to more [**Vivid**] or more [**Muted**] images.	page 6-36
	Sharpness	Adjusts the sharpness of image outlines.	page 6-38
	Background Density Adj.	Removes dark background from originals, such as newspapers.	page 6-39
	Saturation	Adjust the color saturation of the image.	page 6-39
	Prevent Bleed-thru	Hides background colors and image bleed-through when scanning thin original.	page 6-40
	Contrast	You can adjust the contrast between light and dark areas of the image.	page 6-38
	Trapping	Remove hollow spaces in text and on images.	page 6-40
Layout/Edit Configure the settings for duplex printing and stamp.	**Zoom**	Adjust the zoom to reduce or enlarge the image.	page 6-41
	Combine	Combines 2 or 4 original sheets into 1 printed page.	page 6-44
	Margin/Centering	Margin: Add margins (white space). In addition, you can set the margin width and the back page margin. Centering: Centers the original image on the paper when copying onto paper different from the original size.	page 6-46
	Border Erase	Erases the black border that forms around the image.	page 6-47
	Booklet	Scan multiple original pages, then print copies so that they can be folded into a single booklet, with a cover.	page 6-49
	Duplex	Produces two-sided copies. You can also create single-sided copies from two-sided originals.	page 6-52

Tab	Function key	Description	Reference page
Layout/Edit Configure the settings for duplex printing and stamp.	**Form Overlay**	Prints the original document overlaid with a form or image.	page 6-56
	Erase Shadowed Areas	When scanning with the document processor or original cover open, erase the extra shaded area.	page 6-57
	Page #	Adds page numbers to the finished documents.	page 6-57
	Cover	Adds a cover to the finished documents.	page 6-55
	Insert Sheets/ Chapters	Insert a separator sheet, or make the first page of the chapter the front page.	page 6-59
	Image Repeat	Tiles the original image on one sheet of paper.	page 6-62
	Text Stamp	You can add a text stamp on the documents.	page 6-63
	Bates Stamp	You can add a bates stamp on the documents.	page 6-66
	Memo Page	Delivers copies with a space for adding notes.	page 6-60
	Poster	Separates and copies an enlarged image onto multiple pages to make copies larger than the maximum paper size.	page 6-61
Advanced Setup Configure the settings for continuous scanning, mirror image copies, and Skip Blank Page function.	**Continuous Scan**	Scans a large number of originals in separate batches and then produce as one job.	page 6-69
	Auto Image Rotation	When original and paper source size are the same, but their orientation is different, rotate image 90 degrees when copying.	page 6-69
	Negative Image	Inverts black and white portions of the image for printing.	page 6-70
	Mirror Image	Copies the mirrored image of the original.	page 6-70
	Job Finish Notice	Sends E-mail notice when a job is complete. It is also available that send a notice when a job is interrupted.	page 6-70
	File Name Entry	Adds a file name.	page 6-71
	Priority Override	Suspends the current job and gives a new job top priority.	page 6-71
	Repeat Copy	Enables additional copies in the desired quantity as necessary after a copy job is completed.	page 6-72
	OHP Backing Sheet	When printing to sheets of transparency, automatically inserts a paper between them.	page 6-73
	DP Read Action	When the document processor is used, select the scanning operation for the document processor. This function is displayed when the document processor is installed.	page 6-74
	Skip Blank Page	When there are blank pages in a scanned document, this function skips the blank pages and prints only pages that are not blank.	page 6-74

Send

To configure the settings for functions, select the tab and press the function key.

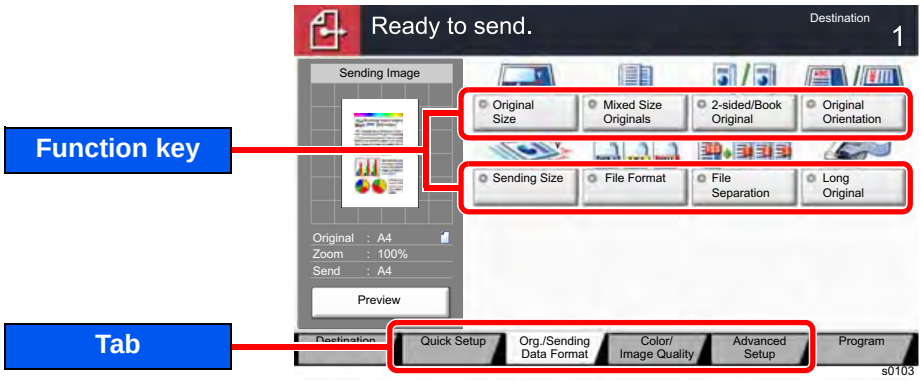

For details on each function, see the table below.

Tab	Function key	Description	Reference page
Org./Sending Data Format Configure the settings for original type and file format.	**Original Size**	Specify the original size to be scanned.	page 6-18
	Mixed Size Originals	Scans the documents of different sizes that are set in the document processor at all once.	page 6-20
	2-sided/Book Original, Book Original	Select the type and orientation of the binding based on the original.	page 6-75
	Original Orientation	Select the orientation of the original document top edge to scan correct direction.	page 6-23
	Sending Size	Select size of image to be sent.	page 6-76
	File Format	Specify the image file format. Image quality level can also be adjusted.	page 6-77
	File Separation	Creates several files by dividing scanned original data page by specified number of pages, and sends the files.	page 6-81
	Long Original	Reads long-sized original documents using a document processor. This function requires the optional document processor.	page 6-84

Tab	Function key	Description	Reference page
Color/ Image Quality Configure the settings for density, quality of copies, and color balance.	**Density**	Adjust density.	page 6-31
	Original Image	Select original image type for best results.	page 6-31
	Scan Resolution	Select fineness of scanning resolution.	page 6-81
	FAX TX Resolution	Select fineness of images when sending FAX.	Refer to the **FAX Operation Guide**.
	Color Selection	Select the color mode setting.	page 6-32
	Sharpness	Adjusts the sharpness of image outlines.	page 6-38
	Background Density Adj.	Removes dark background from originals, such as newspapers.	page 6-39
	Prevent Bleed-thru	Hides background colors and image bleed-through when scanning thin original.	page 6-40
	Contrast	You can adjust the contrast between light and dark areas of the image.	page 6-38

Tab	Function key	Description	Reference page
Advanced Setup Configure the settings for transmission copy, encrypted transmission, and file size confirmation.	**Zoom**	Adjust the zoom to reduce or enlarge the image.	page 6-41
	Centering	Centers the original image on the paper when sending onto paper different from the original size.	page 6-46
	Border Erase	Erases the black border that forms around the image.	page 6-47
	FAX Delayed Transmission	Set a send time.	Refer to the **FAX Operation Guide**.
	Continuous Scan	Scans a large number of originals in separate batches and then produce as one job.	page 6-69
	Job Finish Notice	Sends E-mail notice when a job is complete. It is also available that send a notice when a job is interrupted.	page 6-70
	Erase Shadowed Areas	When scanning with the document processor or original cover open, erase the extra shaded area.	page 6-57
	File Name Entry	Adds a file name.	page 6-71
	i-FAX Subject/ Body	Adds subject and body when sending a document by i-FAX.	Refer to the **FAX Operation Guide**.
	FAX Direct Transmission	Sends FAX directly without reading original data into memory.	Refer to the **FAX Operation Guide**.
	FAX Polling RX	Dial the destination and receive documents for Polling Transmission stored in the polling box.	Refer to the **FAX Operation Guide**.
	Send and Print	Prints a copy of the document being sent.	page 6-82
	Send and Store	Stores a copy of the document being sent in a Custom Box.	page 6-82
	FTP Encrypted TX	Encrypts images when sending via FTP.	page 6-83
	Text Stamp	You can add a text stamp on the documents.	page 6-63
	Bates Stamp	You can add a bates stamp on the documents.	page 6-66
	File Size Confirmation	Checks the file size before sending/storing the original.	page 6-83
	FAX TX Report	Print a report of fax transmission results.	Refer to the **FAX Operation Guide**.
	Skip Blank Page	When there are blank pages in a scanned document, this function skips the blank pages and sends only pages that are not blank.	page 6-74
	E-mail Subject/ Body	Adds subject and body when sending a document.	page 6-82

Custom Box (Store File, Printing, Send)

To configure the settings for functions, select the tab and press the function key.

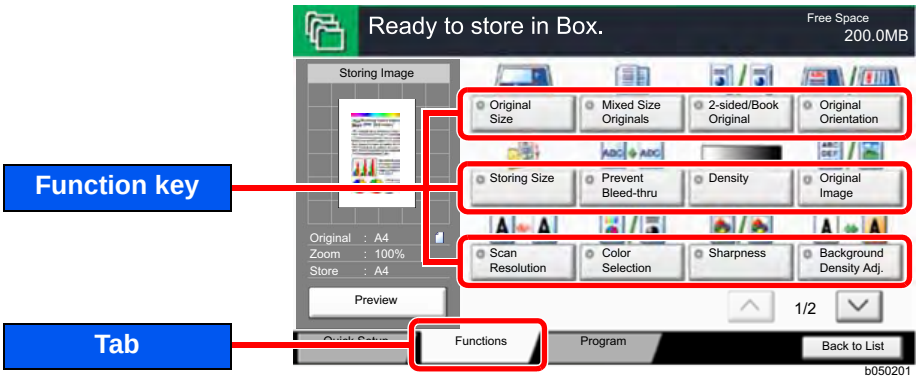

For details on each function, see the table below.

Store File

Tab	Function key	Description	Reference page
Functions Configure the settings when storing the document in the Custom Box.	**Original Size**	Specify the original size to be scanned.	page 6-18
	Mixed Size Originals	Scans the documents of different sizes that are set in the document processor at all once.	page 6-20
	2-sided/Book Original, Book Original	Select the type and orientation of the binding based on the original.	page 6-75
	Original Orientation	Select the orientation of the original document top edge to scan correct direction.	page 6-23
	Storing Size	Select size of image to be stored.	page 6-84
	Prevent Bleed-thru	Hides background colors and image bleed-through when scanning thin original.	page 6-40
	Density	Adjust density.	page 6-31
	Original Image	Select original image type for best results.	page 6-31
	Scan Resolution	Select fineness of scanning resolution.	page 6-81
	Color Selection	Select the color mode setting.	page 6-32
	Sharpness	Adjusts the sharpness of image outlines.	page 6-38
	Background Density Adj.	Removes dark background from originals, such as newspapers.	page 6-39
	Zoom	Adjust the zoom to reduce or enlarge the image.	page 6-41
	Centering	Centers the original image on the paper when storing onto paper different from the original size.	page 6-46

Tab	Function key	Description	Reference page
Functions Configure the settings when storing the document in the Custom Box.	**Border Erase**	Erases the black border that forms around the image.	page 6-47
	Continuous Scan	Scans a large number of originals in separate batches and then produce as one job.	page 6-69
	Job Finish Notice	Sends E-mail notice when a job is complete. It is also available that send a notice when a job is interrupted.	page 6-70
	File Name Entry	Adds a file name.	page 6-71
	Erase Shadowed Areas	When scanning with the document processor or original cover open, erase the extra shaded area.	page 6-57
	Skip Blank Page	When there are blank pages in a scanned document, this function skips the blank pages and stores only pages that are not blank.	page 6-74
	Contrast	You can adjust the contrast between light and dark areas of the image.	page 6-38

Print

Tab	Function key	Description	Reference page
Functions Configure the settings for paper selection and duplex printing when printing from the Custom Box.	**Paper Selection**	Select the cassette or multi-purpose tray that contains the required paper size.	page 6-19
	Collate/Offset	Offsets the output by page or set.	page 6-25
	Staple/Punch	Staples or punches printed documents.	page 6-26
	Paper Output	Specify the output tray.	page 6-30
	Combine	Combines 2 or 4 original sheets into 1 printed page.	page 6-44
	Margin/Centering	Margin: Add margins (white space). In addition, you can set the margin width and the back page margin. Centering: Centers the original image on the paper when copying onto paper different from the original size.	page 6-46
	Booklet	Print document so that it can be folded into a single booklet, with a cover.	page 6-49
	Duplex	Prints 1-sided or open book originals to 2-sided, or 2-sided or open book originals to 1-sided.	page 6-52
	Cover	Adds a cover to the finished documents.	page 6-55
	Form Overlay	Prints the original document overlaid with a form or image.	page 6-56
	Page #	Adds page numbers to the finished documents.	page 6-57
	Job Finish Notice	Sends E-mail notice when a job is complete. It is also available that send a notice when a job is interrupted.	page 6-70
	File Name Entry	Adds a file name.	page 6-71
	Delete after Printed	Automatically deletes a document from the box once printing is complete.	page 6-83
	Priority Override	Suspends the current job and gives a new job top priority.	page 6-71
	EcoPrint	EcoPrint saves toner when printing. Use this function for test prints or any other occasion when high quality print is not required.	page 6-32
	Zoom	Adjust the zoom to reduce or enlarge the image.	page 6-41
	Fold	Fold the finished documents.	page 6-24
	Text Stamp	You can add a text stamp on the documents.	page 6-63
	Bates Stamp	You can add a bates stamp on the documents.	page 6-66

Tab	Function key	Description	Reference page
Functions Configure the settings for paper selection and duplex printing when printing from the Custom Box.	**Color Balance**	Adjust the strength of cyan, magenta, yellow, and black.	page 6-34
	Hue Adjustment	Adjust the color (hue) of images.	page 6-35
	One-touch Image Adjust	Adjust images as desired to more [**Vivid**] or more [**Muted**] images.	page 6-36
	Saturation	Adjust the color saturation of the image.	page 6-39
	Trapping	Remove hollow spaces in text and on images.	page 6-40
Color/ Image Quality Configure the settings for density, quality of copies, and color balance.	**Density**	Adjust density.	page 6-31
	Original Image	Select original image type for best results.	page 6-31
	Color Selection	Select the color mode setting.	page 6-32
	Sharpness	Adjusts the sharpness of image outlines.	page 6-38
	Background Density Adj.	Removes dark background from originals, such as newspapers.	page 6-39
	Prevent Bleed-thru	Hides background colors and image bleed-through when scanning thin original.	page 6-40
	Contrast	You can adjust the contrast between light and dark areas of the image.	page 6-38

Send

Tab	Function key	Description	Reference page
Functions Configure the settings for file format and FAX transmission when sending from the Custom Box.	**Sending Size**	Select size of image to be sent.	page 6-76
	File Format	Specify the image file format. Image quality level can also be adjusted.	page 6-77
	FAX TX Resolution	Select fineness of images when sending FAX.	Refer to the **FAX Operation Guide**.
	Centering	Centers the original image on the paper when sending onto paper different from the original size.	page 6-46
	FAX Delayed Transmission	Set a send time.	Refer to the **FAX Operation Guide**.
	Job Finish Notice	Sends E-mail notice when a job is complete. It is also available that send a notice when a job is interrupted.	page 6-70
	File Name Entry	Adds a file name.	page 6-71
	E-mail Subject/ Body	Adds subject and body when sending a document.	page 6-82
	i-FAX Subject/ Body	Adds subject and body when sending a document by i-FAX.	Refer to the **FAX Operation Guide**.
	FTP Encrypted TX	Encrypts images when sending via FTP.	page 6-83
	Delete after Transmitted	Automatically deletes a document from the box once transmission is complete.	page 6-83
	Zoom	Adjust the zoom to reduce or enlarge the image.	page 6-41
	File Separation	Creates several files by dividing scanned original data page by specified number of pages, and sends the files.	page 6-81
	Text Stamp	You can add a text stamp on the documents.	page 6-63
	Bates Stamp	You can add a bates stamp on the documents.	page 6-66
	File Size Confirmation	Checks the file size before sending/storing the original.	page 6-83
	FAX TX Report	Print a report of fax transmission results.	Refer to the **FAX Operation Guide**.

Tab	Function key	Description	Reference page
Color/ Image Quality Configure the settings for density, quality of copies, and color balance.	**Density**	Adjust density.	page 6-31
	Original Image	Select original image type for best results.	page 6-31
	Resolution	Select fineness of scanning resolution.	page 6-81
	Color Selection	Select the color mode setting.	page 6-32
	Sharpness	Adjusts the sharpness of image outlines.	page 6-38
	Background Density Adj.	Removes dark background from originals, such as newspapers.	page 6-39
	Prevent Bleed-thru	Hides background colors and image bleed-through when scanning thin original.	page 6-40
	Contrast	You can adjust the contrast between light and dark areas of the image.	page 6-38

Removable Memory (Store File, Printing Documents)

To configure the settings for functions, select the tab and press the function key.

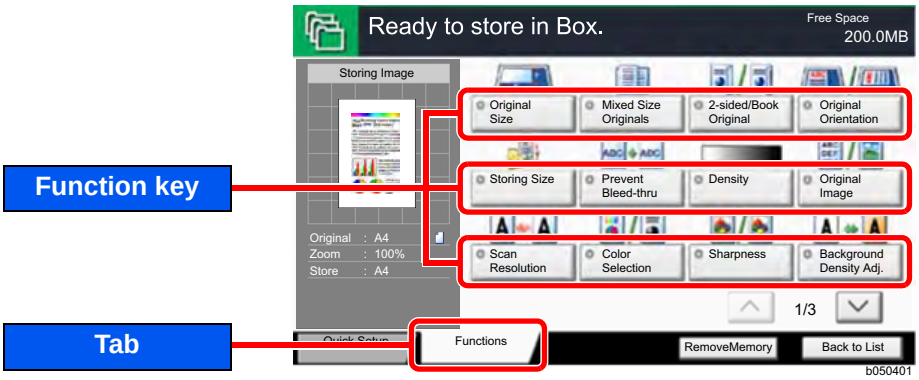

For details on each function, see the table below.

Store File

Tab	Function key	Description	Reference page
Functions Configure the settings for color selection and document name when storing the document in the removable memory.	**Original Size**	Specify the original size to be scanned.	page 6-18
	Mixed Size Originals	Scans the documents of different sizes that are set in the document processor at all once.	page 6-20
	2-sided/Book Original, Book Original	Select the type and orientation of the binding based on the original.	page 6-75
	Original Orientation	Select the orientation of the original document top edge to scan correct direction.	page 6-23
	Storing Size	Select size of image to be stored.	page 6-84
	Prevent Bleed-thru	Hides background colors and image bleed-through when scanning thin original.	page 6-40
	Density	Adjust density.	page 6-31
	Original Image	Select original image type for best results.	page 6-31
	Scan Resolution	Select fineness of scanning resolution.	page 6-81
	Color Selection	Select the color mode setting.	page 6-32
	Sharpness	Adjusts the sharpness of image outlines.	page 6-38
	Background Density Adj.	Removes dark background from originals, such as newspapers.	page 6-39
	Zoom	Adjust the zoom to reduce or enlarge the image.	page 6-41
	Centering	Centers the original image on the paper when storing onto paper different from the original size.	page 6-46
	Border Erase	Erases the black border that forms around the image.	page 6-47
	Continuous Scan	Scans a large number of originals in separate batches and then produce as one job.	page 6-69

Tab	Function key	Description	Reference page
 Configure the settings for color selection and document name when storing the document in the removable memory.	**Job Finish Notice**	Sends E-mail notice when a job is complete. It is also available that send a notice when a job is interrupted.	page 6-70
	File Name Entry	Adds a file name.	page 6-71
	Erase Shadowed Areas	When scanning with the document processor or original cover open, erase the extra shaded area.	page 6-57
	Skip Blank Page	When there are blank pages in a scanned document, this function skips the blank pages and stores only pages that are not blank.	page 6-74
	Contrast	You can adjust the contrast between light and dark areas of the image.	page 6-38
	Text Stamp	You can add a text stamp on the documents.	page 6-63
	Bates Stamp	You can add a bates stamp on the documents.	page 6-66
	File Format	Specify the image file format. Image quality level can also be adjusted.	page 6-77
	File Separation	Creates several files by dividing scanned original data page by specified number of pages, and sends the files.	page 6-81
	Long Original	Reads long-sized original documents using a document processor. This function requires the optional document processor.	page 6-84

Printing Documents

Tab	Function key	Description	Reference page
Functions Configure the settings for paper selection and duplex printing when printing from the removable memory.	**Paper Selection**	Select the cassette or multi-purpose tray that contains the required paper size.	page 6-19
	Collate/Offset	Offsets the output by page or set.	page 6-25
	Staple/Punch	Staples or punches printed documents.	page 6-26
	Paper Output	Specify the output tray.	page 6-30
	Margin	Add margins (white space). In addition, you can set the margin width and the back page margin.	page 6-46
	Duplex	Print a document to 1-sided or 2-sided sheets.	page 6-52
	Job Finish Notice	Sends E-mail notice when a job is complete. It is also available that send a notice when a job is interrupted.	page 6-70
	Priority Override	Suspends the current job and gives a new job top priority.	page 6-71
	EcoPrint	EcoPrint saves toner when printing. Use this function for test prints or any other occasion when high quality print is not required.	page 6-32
	Fold	Fold the finished documents.	page 6-24
	Text Stamp	You can add a text stamp on the documents.	page 6-63
	Bates Stamp	You can add a bates stamp on the documents.	page 6-66
	Encrypted PDF Password	Enter the preassigned password to print the PDF data.	page 6-85
	JPEG/TIFF Print	Select the image size when printing JPEG or TIFF files.	page 6-85
	XPS Fit to Page	Reduces or enlarges the image size to fit to the selected paper size when printing XPS file.	page 6-85
Color/ Image Quality Configure the color mode settings.	**Color Selection**	Select the color mode setting.	page 6-32

Functions

On pages that explain a convenient function, the modes in which that function can be used are indicated by icons.

Icon	Description
	Access to the function is indicated by icons. Example: Select the [**Org./Paper/Finishing**] tab in the Copy screen to use the function.
	Access to the function is indicated by icons. Example: Select the [**Org./Sending Data Format**] tab in the Send screen to use the function.
	Access to the function is indicated by icons. Example: Select the [**Functions**] tab in the Custom Box screen to use the function.
	Access to the function is indicated by icons. Example: Select the [**Functions**] tab in the Removable Memory screen to use the function.

Original Size



Specify the original size to be scanned.

Select [**Standard Sizes 1**], [**Standard Sizes 2**], [**Others**] or [**Size Entry**] to select the original size.

Item	Value		Description
Standard Sizes 1	Metric models:	Auto, A3, A4-R, A4, A5-R, A5, A6-R, B4, B5, B5-R, B6-R, B6, Folio, 216×340 mm	Have the size of original detected automatically, or select from the standard sizes.
	Inch models:	Auto, Ledger, Letter-R, Letter, Legal, Statement-R, Statement, 11×15", Oficio II	
Standard Sizes 2	Metric models:	Ledger, Letter-R, Letter, Legal, Statement-R, Statement, 11×15", Oficio II, 8K, 16K-R, 16K	Select from standard sizes except Standard Sizes 1.
	Inch models:	A3, A4-R, A4, A5-R, A5, A6-R, B4, B5-R, B5, B6-R, B6, Folio, 8K, 16K-R, 16K, 216×340 mm	
Others	Hagaki (Cardstock), Oufuku hagaki (Return postcard), Custom 1 to 4*1		Select from postcard or the custom sized originals.
Size Entry	Metric	X: 50 to 432 mm (in 1 mm increments) Y: 50 to 297 mm (in 1 mm increments)	Enter the size not included in the standard sizes 1 and 2.*2 When you have selected [**Size Entry**], select [**+**] or [**-**] to set the sizes of "X" (horizontal) and "Y" (vertical). Select [**# Keys**] to use the numeric keys for entry.
	Inch	X: 2.00 to 17.00" (in 0.01" increments) Y: 2.00 to 11.69" (in 0.01" increments)	

*1 For instructions on how to specify the custom original sizes (Custom 1 to 4), refer to the following:
➡ Custom Original Size (page 8-11)

*2 The input units can be changed in System Menu. For details, refer to the following:
➡ Measurement (page 8-15)

NOTE

Be sure to always specify the original size when using custom size original.

Paper Selection

Copy > Org./Paper/Finishing

Custom Box > Functions

USB Memory > Functions

Select the cassette or multi-purpose tray that contains the required paper size.

If [**Auto**] is selected, the paper matching the size of the original is selected automatically.

NOTE

- Specify in advance the size and type of the paper loaded in the cassette.
  Cassette/MP Tray Settings (page 8-7)
- Cassettes after Cassette 3 are displayed when the optional paper feeder is installed.

To select [**MP tray**], select [**Paper Size**] and [**Media Type**], and specify the paper size and the media type. The available paper sizes and media types are shown in the table below.

Item		Value		Description
Paper Size	**Standard Sizes 1**	Metric models:	A3[*1*3], A4-R[*2*3], A4[*2*3], A5-R[*2*3], A5[*2], A6-R[*2*3], B4[*1*3], B5-R[*2*3], B5[*2*3], B6-R[*2*3], Folio[*2*3], 216×340 mm[*4], SRA3[*1*3]	Select from the standard size.
		Inch models:	Ledger[*1*3], Letter-R[*2*3], Letter[*2*3], Legal[*2*3], Statement[*2*3], Executive, 12×18"[*1*3], Oficio II	
	Standard Sizes 2	Metric models:	Ledger[*1*3], Letter-R[*2*3], Letter[*2*3], Legal[*2*3], Statement[*2*3], Executive, 12×18"[*1*3], Oficio II, 8K[*4], 16K-R, 16K	Select from standard sizes except Standard Sizes 1.
		Inch models:	A3[*1*3], A4-R[*2*3], A4[*2*3], A5-R[*2*3], A5[*2], A6-R[*2*3], B4[*1*3], B5-R[*2*3], B5[*2*3], B6-R[*2*3], Folio[*2*3], 8K[*4], 16K-R, 16K, 216×340 mm[*4], SRA3[*1*3]	
	Others	ISO B5, Envelope #10, Envelope #9, Envelope #6, Envelope Monarch, Envelope DL, Envelope C5, Envelope C4[*4], Hagaki (Cardstock)[*3], Oufuku Hagaki (Return postcard), Youkei 4, Youkei 2, Custom[*5]		Select from special standard sizes and custom sizes.
	Size Entry	Metric	X: 148 to 457 mm (in 1 mm increments) Y: 98 to 320 mm (in 1 mm increments)	Enter the size not included in the standard size.[*6] When you have selected [**Size Entry**], use [**+**]/[**-**] or the numeric keys to set the sizes of "X" (horizontal) and "Y" (vertical). Select [**# Keys**] to use the numeric keys for entry.
		Inch	X: 5.83 to 18.00" (in 0.01" increments) Y: 3.86 to 12.60" (in 0.01" increments)	
Media type		Plain (60 to 105 g/m^2), Transparency, Rough, Vellum (52 to 105 g/m^2), Labels, Recycled, Preprinted[*7], Bond, Cardstock, Color, Prepunched[*7], Letterhead[*7], Thick (106 g/m^2 and more), Envelope, Coated, High Quality, Index Tab Dividers, Custom 1-8[*7]		

*1 Paper size is automatically detected in the cassette (excluding cassette 1).
*2 Paper size is automatically detected in the cassette.
*3 Paper size is automatically detected in the Multi Purpose Tray.
*4 This paper cannot be used in Cassette 1.
*5 For instructions on how to specify the custom paper size, refer to the following:
Custom Paper Size (page 8-12)

*6 The input units can be changed in System Menu. For details, refer to the following:
Measurement (page 8-15)
*7 For instructions on how to specify the custom paper types 1 to 8, refer to the following:
Media Type Setting (page 8-15)
To print on preprinted or prepunched paper or on letterhead, refer to the following:
Special Paper Action (page 8-14)

IMPORTANT

When paper size and the media type for MP tray is specified, [Paper Settings] is selected. Note that if [MP Tray] is pressed at this point, the settings will be canceled.

NOTE

- You can conveniently select in advance the size and type of paper that will be used often and set them as default.
MP Tray Setting (page 8-8)
- If the specified size of paper is not loaded in the paper source cassette or multi purpose tray, a confirmation screen appears. When [**Auto**] is selected and the same size of paper as the detected original size is not loaded, a paper confirmation screen appears. Load the required paper in the multi purpose tray and press [**Continue**] to start copying.

Mixed Size Originals

Copy > Org./Paper/ Finishing Send > Org./Sending Data Format Custom Box > Functions USB Memory > Functions

Scans the documents of different sizes that are set in the document processor at all once.

This function cannot be used if platen is used. Different Width is not displayed in inch models.

Copying

Metric Models

Item		Value	Description
Off			
Mixed Size Copies	**Original Width**[*1]	Same Width, Different Width	Select options for the width of set original.
Same Size Copies	**Original Width**[*1]	Same Width, Different Width	Select options for the width of set original.
	Top Page Direction	Long Edge Left, Short Edge Left	Select the original orientation of the first page.

*1 If the document processor (DP-7120) is used, it is not possible to specify a different width for the original.

Inch Models

Item		Value	Description
Off			
Mixed Size Copies		—	Originals are detected individually for size and copied to the same size paper as originals.
Same Size Copies	**Top Page Direction**	Long Edge Left, Short Edge Left	Select the original orientation of the first page.

Sending

Item	Value	Description
Mixed Size Originals	**Off**	
	Same Width	Scans and sends multiple sheets of the same width using the document processor.
	Different Width	Scans and sends multiple sheets of different width using the document processor.

Storing

Item	Value	Description
Off		
Mixed Size Originals	Same Width	Scans and sends multiple sheets of the same width using the document processor.
	Different Width	Scans and sends multiple sheets of different width using the document processor.

Supported Combinations of Originals

Same Width

When the original widths are the same, the combinations of originals that can be placed are as follows.

- B4 and B5
- Ledger and Letter (A3 and A4)
- Legal and Letter-R (Folio and A4-R)

Example: B4 and B5

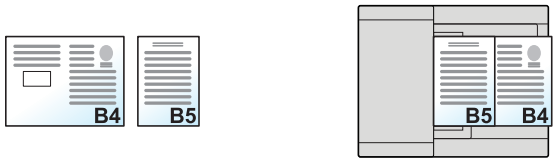

NOTE

When mixing the original sizes as using the following combination, make sure to set "Auto Detect Original Size" to [**On**] for "Folio".

Folio and A4

Auto Detect Original Size (page 8-13)

Different Width (Available for metric models only)

The supported combinations of originals are as follows.

- A3, B4, A4, B5
- B4, A4-R, B5
- A4-R, B5-R, Folio

Example: A3, B4, A4, B5



* Set the original of A4 and B5 with vertical orientation.

NOTE

- If you are using the document processor (DP-7120), originals of different width cannot be loaded together.
- Number of sheet that can be placed in the document processor: up to 30 sheets
- When mixing the original sizes as using the following combination, make sure to set "Auto Detect Original Size" to [On] for "Folio".

  A4-R, B5-R, and Folio

  Auto Detect Original Size (page 8-13)

IMPORTANT

When placing originals of different width, arrange the originals so that their left sides and top sides are aligned, and place the originals in alignment with the far width guide. If the originals are not aligned in this way, they may not be scanned correctly, and skewing or original jams may result.

Selecting How to Copy Originals

Set the paper size (copy size) when printing scanned document. Select whether you wish to create individual copies on different size paper matching the original sizes or to produce all copies on the same size paper.

NOTE

This function is available regardless of whether originals have the same width or not.

Mixed Size Copies

Originals are detected individually for size and copied to the same size paper as originals.



Same Size Copies

Originals are all copied to the same size paper.



Original Orientation

Copy > Org./Paper/ Finishing

Send > Org./Sending Data Format

Custom Box > Functions

USB Memory > Functions

Select the orientation of the original document top edge to scan correct direction.

To use any of the following functions, the document's original orientation must be set.

- Zoom (XY Zoom)
- Duplex
- Margin/Centering
- Border Erase
- Combine
- Memo page
- Page #
- Booklet
- Stapling/Punch (optional feature)
- 2-sided/Book Original
- Text Stamp
- Bates Stamp

NOTE

If [**On**] is selected in the setting for Original Orientation in System Menu, the selection screen for original orientation appears when you select any of the above functions.

Orientation Confirmation (page 8-18)

Select original orientation from [**Top Edge on Top**], [**Top Edge on Left**] or [**Auto**].

Item	Image
Top Edge on Top	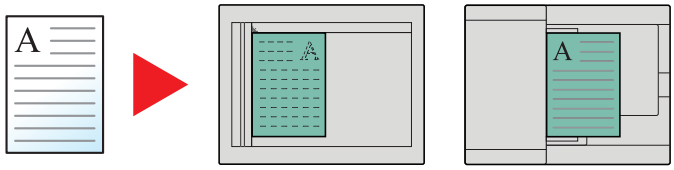 Original Original orientation
Top Edge on Left	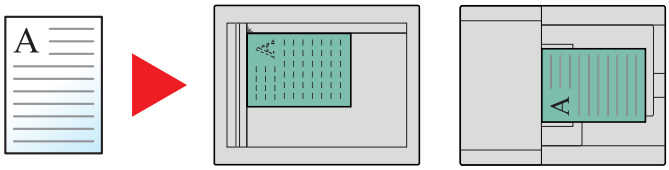 Original Original orientation
Auto[*1]	

*1 This function can only be used when the optional OCR Scan Activation Kit is installed.

NOTE

The default setting for Original Orientation can be changed.

Orig. Orientation (Copy) (page 8-18)

Fold

Copy > Org./Paper/Finishing > Custom Box > Functions > USB Memory > Functions

Folds the finished documents. Select the fold method.

The following folding options and orientations are available.

Item			Original orientation: Orientation: Landscape 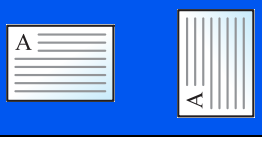	Original orientation: Orientation: Portrait 
Bi-Fold				
	Saddle Stitch		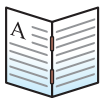	
Tri-Fold	Inside	R to L/B to T		
		L to R/T to B		
	Outside	R to L/B to T		
		L to R/T to B		

NOTE

- Folding requires the optional 4,000-Sheet Finisher and the folding unit.
- For details on paper sizes and numbers of sheets that can be folded, refer to the following:

Folding Unit (page 11-31)

Collate/Offset

Copy > Org./Paper/Finishing

Custom Box > Functions

USB Memory > Functions

Offsets the output by page or set.

Item	Image	Description
Collate	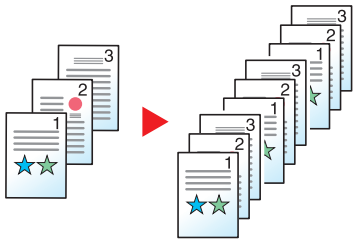	Scans multiple originals and delivers complete sets of copies as required according to page number.
Offset	Without Document Finisher (Option) 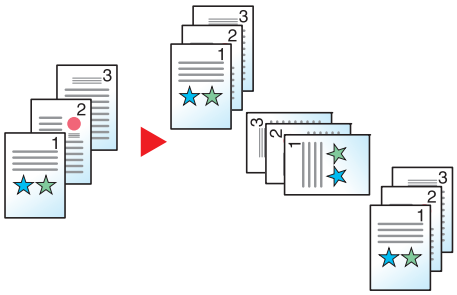	Printed copies are produced after rotating each set (or page*1) by 90 degrees. **NOTE** To use offsetting, the same size of paper as the selected paper tray must be loaded in a different orientation in a different paper tray. The paper sizes supported in Offset: A4, B5, Letter and 16K.
	With Document Finisher (Option) 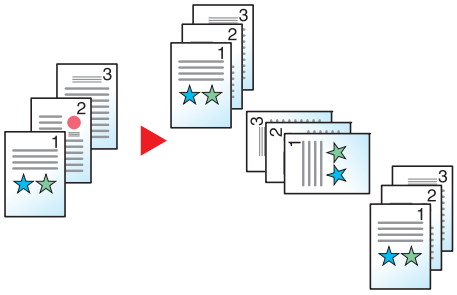	Printed copies are segregated after each set of copies (or after each page*1). **NOTE** • The optional Document Finisher is required. → Inner Finisher (page 11-28) → 1,000-Sheet Finisher (page 11-29) → 4,000-Sheet Finisher (page 11-29) • The paper sizes supported in Offset: A3, A4, B4, B5, 216×340 mm, Ledger, Letter, Legal, Oficio II, 8K and 16K.

*1 If [**Off**] is selected for "Collate" setting, [**Each Page**] appears. When [**On**] is selected, [**Each Set**] appears.

Staple/Punch

Copy > Org./Paper/Finishing

Custom Box > Functions

USB Memory > Functions

Staple

NOTE

This function requires the optional Document Finisher. Note also that saddle stitching (center stapling) requires the Folding Unit.

For details on paper sizes and numbers of sheets that can be stapled, refer to the following:

- Inner Finisher (page 11-28)
- 1,000-Sheet Finisher (page 11-29)
- 4,000-Sheet Finisher (page 11-29)
- Folding Unit (page 11-31)

Staples the finished documents. The staple position can be selected.

Item	Value	Description
Staple	Off	
	Top Left	Select the staple position. For details on original orientation and staple position, refer to the following: Original Orientation and Punch Hole Position (page 6-29)
	Top Right	
	2 staples Left	
	2 staples Top	
	2 staples Right	
	Saddle Stitch	Select whether to fold the finished documents in two with staples in the center. When placing originals, be sure to place the cover page at the bottom. For details on saddle stitching, refer to the following: Booklet (page 6-49)
Original Orientation	Top Edge on Top, Top Edge on Left, Auto*1	Select the orientation of the original document top edge to scan correct direction. Select [**Original Orientation**] to choose orientation of the originals, either [**Top Edge on Top**] or [**Top Edge on Left**]. Then select [**OK**].

*1 This function can only be used when the optional OCR Scan Activation Kit is installed.

Original Orientation and Staple Position

1,000-Sheet Finisher, 4,000-Sheet Finisher

Original orientation / Paper orientation	Paper orientation		Top Edge on Left	
				
Cassette paper load direction 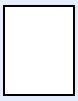				
Cassette paper load direction 				

Inner Finisher

Original orientation / Paper orientation	Paper orientation		Top Edge on Left	
				
Cassette paper load direction 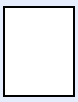				
Cassette paper load direction 				

NOTE

One position staple is not slanted for the following paper sizes.

B5-R, 16K-R

Mixed Size Stapling

Even with mixed paper sizes, if the sizes have the same width as shown in the combinations below, the output can be stapled.

- A3 and A4
- B4 and B5
- Ledger and Letter
- Ledger and Letter-R
- 8K and 16K

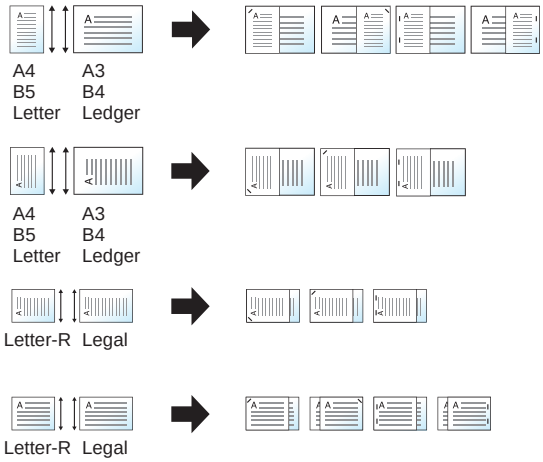

NOTE

- Number of sheets that can be stapled: up to 30 sheets.
- When performing Mixed Size Stapling, refer to the following:
  Mixed Size Originals (page 6-20)

Punch

Punches holes in sets of finished documents.

NOTE

- This function requires the optional Document Finisher and Punch Unit.
- For details on paper sizes that can be punched, refer to the following:
  Punch Unit (For Inner Finisher) (page 11-28)
  Punch Unit (For 1,000-Sheet/4,000-Sheet Finisher) (page 11-30)
- The inch model provides two-hole and three-hole punching. The metric model provides two-hole and four-hole punching.

Item	Value	Description
Punch	Off	
	2 holes Left	Select the position of punch holes. For details on original orientation and position of punch holes, refer to the following: Original Orientation and Punch Hole Position (page 6-29)
	2 holes Top	
	2 holes Right	
	3 holes Left	
	3 holes Top	
	3 holes Right	
	4 holes Left	
	4 holes Top	
	4 holes Right	
Original Orientation	Top Edge on Top, Top Edge on Left, Auto*1	Select the orientation of the original document top edge to scan correct direction. Select [**Original Orientation**] to choose orientation of the originals, either [**Top Edge on Top**] or [**Top Edge on Left**]. Then select [**OK**].

*1 This function can only be used when the optional OCR Scan Activation Kit is installed.

Original Orientation and Punch Hole Position

Image		Original orientation	
Original	Print results	Glass platen	Document processor
		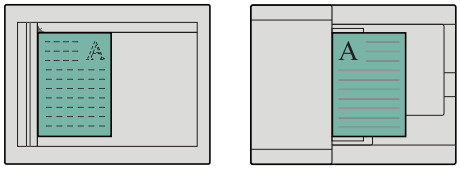	
		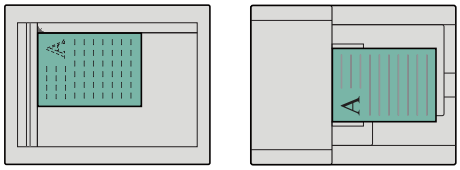	
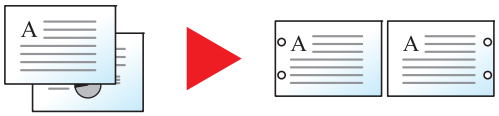		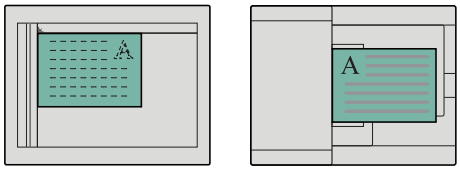	
		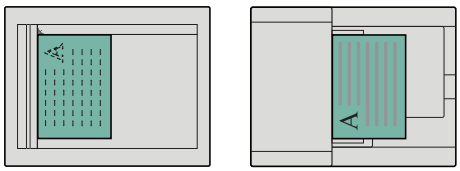	

NOTE

The inch model provides two-hole and three-hole punching. The metric model provides two-hole and four-hole punching.

Paper Output



Specify the output tray.

with optional Job Separator

Item	Description
Inner tray	Outputs to the Inner Tray of the machine.
Job Separator Tray	Delivery to the Inner Job Separator.

with optional 1,000-Sheet Finisher

Item	Description
Finisher Tray	Delivery to the Finisher Tray of the optional Document Finisher.
Job Separator Tray[*1]	Delivery to the Inner Job Separator.

*1 The paper sizes cannot be output to the Job Separator Tray: A3, Ledger.

with optional 4,000-Sheet Finisher

Item	Description
Tray A	Delivery to the Tray A of the optional Document Finisher.
Tray B	Delivery to the Tray B of the optional Document Finisher. When [**Heavy 5**] (257 g/m^2 - 300 g/m^2) is set in Paper Weight and tray B is set for the output destination, the output destination is automatically changed to the tray A.
Job Separator Tray[*1]	Delivery to the Inner Job Separator.

*1 The paper sizes cannot be output to the Job Separator Tray: A3, Ledger.

with optional Mailbox

Item	Description
Tray A	Delivery to the Tray A of the optional Document Finisher.
Tray B	Delivery to the Tray B of the optional Document Finisher. When [**Heavy 5**] (257 g/m^2 - 300 g/m^2) is set in Paper Weight and tray B is set for the output destination, the output destination is automatically changed to the tray A.
Job Separator Tray[*1]	Delivery to the Inner Job Separator.
Tray 1 to 7	Delivery to tray 1 to 7 (tray 1 is the uppermost tray) of the optional Mailbox. When [**Heavy 3**] to [**Heavy 4**] (164 g/m^2 - 256 g/m^2) is set in Paper Weight and Mailbox is set for the output destination, the output destination is automatically changed to the tray B. When [**Heavy 5**] (257 g/m^2 - 300 g/m^2) is set in Paper Weight and Mailbox is set for the output destination, the output destination is automatically changed to the tray A.

*1 The paper sizes cannot be output to the Job Separator Tray: A3, Ledger.

NOTE

- This can be set when the optional Job Separator or Document Finisher (1,000-Sheet Finisher or 4,000-Sheet Finisher) is installed. This cannot be set when the optional Inner Finisher is installed.
- The default setting for Paper Output can be changed.

Paper Output (page 8-17)

Density

Copy > Color/Image Quality | Send > Color/Image Quality | Custom Box > Functions > Color/Image Quality | USB Memory > Functions

Adjust density.

(Value: [**-4**] (Lighter) to [**+4**] (Darker))



Original Image

Copy > Color/Image Quality | Send > Color/Image Quality | Custom Box > Functions > Color/Image Quality | USB Memory > Functions

Select original image type for best results.

Copying

Item	Value	Description
Text+Photo[*1] [*2]	**Printer Output**	Best for mixed text and photo documents printed on this machine originally.
	Book/Magazine	Best for mixed text and photos printed in a magazine, etc.
Photo	**Printer Output**	Best for photos printed on this machine originally.
	Book/Magazine	Best for photos printed in a magazine, etc.
	Photo Paper	Best for photos taken with a camera.
Text[*1]	**Off (Light Text/Fine Line)**	Best for documents that are mostly text and were originally printed on this machine.
	On (Light Text/Fine Line)	Sharply renders pencil text and fine lines.
Graphic/Map[*1]	**Printer Output**	Best for maps and diagrams printed on this machine originally.
	Book/Magazine	Best for maps and diagrams printed in a magazine.

*1 "Highlighter" can be selected.
Select to bring out text and markings made with a highlighter pen. Reproduces the color of the highlighter pen to the extent possible.

*2 If gray text is not printed completely using [**Text + Photo**], selecting [**Text**] may improve the result.

Sending/Printing/Storing

Item	Description
Text+Photo	Best for mixed text and photo documents.
Photo	Best for photos taken with a camera.
Text[*1]	Sharply renders pencil text and fine lines. Select [**Text**], [**Text (Fine Line)**] or [**Text (OCR)**].

*1 The setting "for OCR" can be configured. When [**Text (OCR)**] is selected, scanning produces an image that is suitable for OCR. This function is only available when Color Selection is set to Black and White.
➔ Color Selection (page 6-32)

EcoPrint

Copy > Color/Image Quality Custom Box > Functions USB Memory > Functions

EcoPrint saves toner when printing. Use this function for test prints or any other occasion when high quality print is not required.

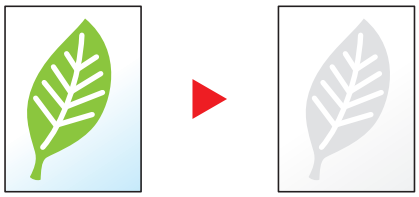

Item	Value	Description
Off		
On	[1] (Low) to [5] (High)	Adjust the Toner Save Level.

Color Selection

Copy > Color/Image Quality Send > Color/Image Quality Custom Box > Functions > Color/Image Quality USB Memory > Functions > Color/Image Quality

Select the color mode setting.

Copying

Item	Description
Auto Color	Automatically recognizes whether documents are color or black and white.
Full Color	Prints documents in full color.
Black & White	Prints documents in black and white.

Item		Description
Single Color	**Cyan**	Specify one of the colors and produce copies in that color regardless of original type.
	Magenta	
	Yellow	
	Red	
	Green	
	Blue	

Printing

Item	Description
Auto Color (Color/Gray)[*1]	The color of the stored document is automatically detected. A color document is printed in full color, and a black & white document is printed in grayscale.
Auto Color (Color/B & W)[*1]	The color of the stored document is automatically detected. A color document is printed in full color, and a black & white document is printed in black & white.
Full Color	Prints documents in full color.
Grayscale[*1]	Prints documents in grayscale.
Black & White	Prints documents in black and white.

*1 Not displayed when printing from removable memory.

Sending/Storing

Item	Description
Auto Color (Color/Gray)	Automatically recognizes whether the document is color or black and white, and scan color documents in Full Color and black and white documents in Grayscale.
Auto Color (Color/B & W)	Automatically recognizes whether the document is color or black and white, and scan color documents in Full Color and black and white documents in Black and White.
Full Color	Scans the document in full color.
Grayscale	Scans the document in grayscale. Produces a smooth, detailed image.
Black & White	Scans the document in black and white.

Color Balance

Copy > Color/ Image Quality > Custom Box > Functions

Adjust the strength of cyan, magenta, yellow, and black.

Example:

Less Magenta ◀ **Original** ▶ **More Magenta**



Item		Value	Description
Off			
On	**Cyan**	[**-5**] to [**+5**]	Select [<] or [>] on each side of the color (Cyan, Magenta, Yellow, Black) to adjust each color.
	Magenta		
	Yellow		
	Black		

NOTE

This feature is used with full color and auto color copying.

Hue Adjustment

Copy > Color/Image Quality > Custom Box > Functions

Adjust the color (hue) of images.

Make adjustments such as adjusting red to a strong yellow-red or yellow to a strong green-yellow to make more creative copies.

Original



When adjusting yellow to more green, blue to more magenta (the ▼ part)





When adjusting yellowish-red to more yellow, bluish-cyan to more blue (the ▼ part)

The following settings can be set.

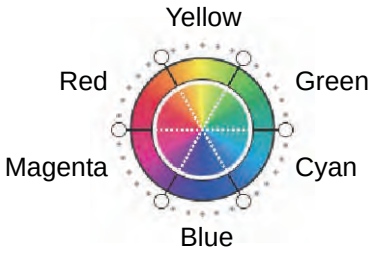

Item	Description
Off	
All	Adjust hue for all colors. Select [↺] or [↻] to adjust the hue.
Individual	Select individual colors to adjust the hue. Select [**Red**], [**Magenta**], [**Blue**], [**Yellow**], [**Green**] or [**Cyan**] and then select [↺] or [↻] to adjust the hue.

NOTE

This feature is used with full color and auto color copying.

These adjustments are especially useful on rich color images.

One-touch Image Adjust

Copy > Color/ Image Quality > Custom Box > Functions

Adjust images as desired to more [**Vivid**] or more [**Muted**] images.

NOTE

This feature can be used with full color and auto color.

The following settings can be set.

After selecting [**Portrait Photo**], [**Landscape Photo (Blue)**] or [**Landscape Photo (Green)**], select [**Color Shade**], select from the 3 patterns, and select [**OK**].

Item			Before	After	Description
Off					
[Portrait Photo]	**Color Shade**	**[Portrait 1]**			Gives skin color a warm, rosy look.
		[Portrait 2]			Gives skin color a tanned look.
		[Portrait 3]			Gives skin color a whiter look.
[Landscape Photo (Blue)]	**Color Shade**	**[Blue 1]**			Makes blue more vivid.
		[Blue 2]			Makes blue a true blue without any green.
		[Blue 3]			Gives blue a greenish (emerald green) tint.
[Landscape Photo (Green)]	**Color Shade**	**[Green 1]**			Makes green more vivid.
		[Green 2]			Gives green a yellowish-green tint.
		[Green 3]			Gives green a slightly bluish tint.

Item	Before	After	Description
[Vivid]			Increases saturation for a more vivid effect.
[Muted]			Reduces saturation for a calmer effect.
[Sharp]			Increases contrast for a more pronounced image.
[Smooth]			Reduces contrast for a softer image.
[Light]			Makes overall color lighter and less vivid for a bright and light feel.
[Dark]			Makes overall color darker for a heavier feel.

NOTE

Select from one of the 9 available One Touch Image Adjust types. Multiple selections are not possible.

Sharpness

Copy > Color/Image Quality | Send > Color/Image Quality | Custom Box > Functions > Color/Image Quality | USB Memory > Functions

Adjusts the sharpness of image outlines.

When copying penciled originals with rough or broken lines, clear copies can be taken by adjusting sharpness toward "Sharpen". When copying images made up of patterned dots such as magazine photos, in which moire*1 patterns appear, edge softening and weakening of the moire effect can be obtained by setting the sharpness toward "Blur".

When [**All**] is selected, select [**-3**] to [**3**] (Blur - Sharpen) to adjust the sharpness.
When [**Text/Fine Line**] is selected, select [**0**] to [**3**] (Normal - Sharpen) to adjust the sharpness.

Less Sharp ◀ **Original** ▶ **More Sharp**



Item	Value	Description
All	**[+1] to [+3] (Sharpen)**	Emphasizes the image outline.
	[-1] to [-3] (Blur)	Blurs the image outline. Can weaken a Moire*1 effect.
Text/Fine Line	**[0] to [3] (Normal - Sharpen)**	Makes letters and lines appear sharper. Only text and fine lines are emphasized.

*1 Patterns that are created by irregular distribution of halftone dots.

Contrast

Copy > Color/Image Quality | Send > Color/Image Quality | Custom Box > Functions > Color/Image Quality | USB Memory > Functions

You can adjust the contrast between light and dark areas of the image.

Lower ◀ **Original** ▶ **Higher**



Item	Description
[+1] to [+4] (Higher)	Increases the sharpness of colors.
[-1] to [-4] (Lower)	Creates smoother colors.

Background Density Adj. (Background Density Adjustment)

Copy > Color/Image Quality | Send > Color/Image Quality | Custom Box > Functions > Color/Image Quality | USB Memory > Functions

Removes dark background from originals, such as newspapers.

This feature is used with full color and auto color. Background Density Adjustment is disabled if Auto Color detects black and white originals.

If the ground color is obtrusive, select [**Auto**]. If [**Auto**] does not remove the ground color, select [**Manual**] and adjust the density of the ground color.

Item	Description
Off	Does not adjust the ground color.
Auto	Automatically adjusts the background density based on the original.
Manual	Select [**1**] to [**5**] (Lighter - Darker) to adjust the background density manually.

Saturation

Copy > Color/Image Quality | Custom Box > Functions

Adjust the color saturation of the image.

Grayish



Results in paler color.

Original



Vivid



Results in more vivid color.

NOTE

This feature is used with full color and auto color. Saturation is disabled if Auto Color detects black and white originals.

Item	Description
[-1] to [-3] (Grayish)	Results in paler color.
[+1] to [+3] (Vivid)	Results in more vivid color.

Prevent Bleed-thru

Copy > Color/Image Quality | Send > Color/Image Quality | Custom Box > Functions > Color/Image Quality | USB Memory > Functions

Hides background colors and image bleed-through when scanning thin original.

(**Value**: [**Off**] / [**On**])



Trapping

Copy > Color/Image Quality | Custom Box > Functions

Remove blank areas if characters and the image outline in black have blank areas because of color drift.

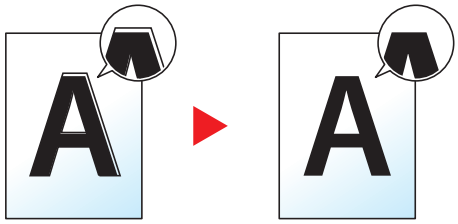

IMPORTANT

- **Before setting Trapping, execute calibration. Set Trapping only if blank areas are not improved.**
  Calibration (page 10-55)
- **If Trapping is set, the outline may be highlighted.**

Item	Value	Description
Off		
On	Light, Medium, Heavy	Set Trapping Level. A higher level eliminates more blank areas.

Zoom

Copy > Layout/Edit | Send > Advanced Setup | Custom Box > Functions | USB Memory > Functions

Adjust the zoom to reduce or enlarge the image.

Copying

The following zoom options are available.

Standard Zoom

Auto

Adjusts the image to match the paper size.

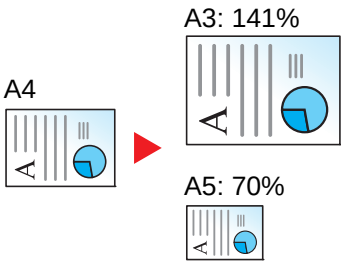

Standard Zoom

Reduces or enlarges at preset magnifications.

Zoom Entry

Manually reduces or enlarges the original image in 1% increments between 25% and 400%. Use the numeric keys or select [+] or [-] to enter the any magnification.

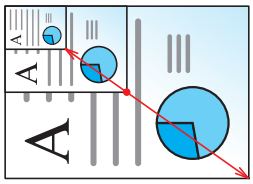

Item		Value	Description
Standard Zoom			
	Metric	Auto, 400% Max., 200% A5>>A3, 141% A4>>A3 B5>>B4, 127% Folio>>A3, 106% 11x15">>A3, 100%, 90% Folio>>A4, 75% 11x15" >>A4, 70% A3>>A4 A4>>A5, 50%, 25% Min. 25 to 400% (in 1% increments)	Select a preset ratio. Select [**Auto**] to use Auto Zoom. Select [**+**] or [**-**] to change the displayed magnification as desired. Select [**# Keys**] to use the numeric keys for entry.
	Metric (Asia Pacific)	Auto, 400% Max., 200% A5>>A3, 141% A4>>A3 B5>>B4, 122% A4>>B4 A5>>B5, 115% B4>>A3 B5>>A4, 100%, 86% A3>>B4 A4>>B5, 81% B4>>A4 B5>>A5, 70% A3>>A4 B4>>B5, 50%, 25% Min. 25 to 400% (in 1% increments)	
	Inch	Auto, 400% Max., 200% STMT>>Ledger, 154% STMT>>Legal, 129% Letter>>Ledger, 121% Legal>>Ledger, 100%, 78% Legal>>Letter, 77% Ledger>>Legal, 64% Ledger>>Letter, 50% Ledger>>STMT, 25% Min. 25 to 400% (in 1% increments)	

XY Zoom

XY Zoom

Select vertical and horizontal magnifications individually. Magnifications can be set in 1% increments between 25% and 400%.

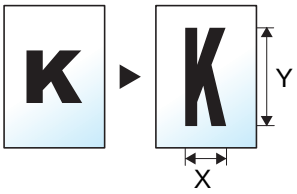

Item		Value	Description
XY Zoom		X: 25 to 400% (in 1 mm increments) Y: 25 to 400% (in 1 mm increments)	Select vertical and horizontal magnifications individually. Select [**+**] or [**-**] to change the displayed magnifications of "X" (horizontal) and "Y" (vertical). Select [**# Keys**] to use the numeric keys for entry.
	Original Orientation	Top Edge on Top, Top Edge on Left, Auto*1	Select the orientation of the original document top edge to scan correct direction. Select [**Original Orientation**] to choose orientation of the originals, either [**Top Edge on Top**] or [**Top Edge on Left**]. Then press [**OK**].

*1 This function can only be used when the optional OCR Scan Activation Kit is installed.

Printing/Sending/Storing

Item	Description
100%	Reproduces the original size.
Auto	Reduces or enlarges original to sending/storing size.

NOTE

- To reduce or enlarge the image, select the paper size, sending size, or storing size.
  - Paper Selection (page 6-19)
  - Sending Size (page 6-76)
  - Storing Size (page 6-84)
- Some combinations of original size and paper size or sending size may cause the image to be positioned at the edge of the paper. To center the original vertically and horizontally on the page, use the Centering function.
  - Margin/Centering, Margin, Centering (page 6-46)

Combine

Copy > Layout/Edit > Custom Box > Functions

Combines 2 or 4 original sheets into 1 printed page.

You can select the page layout and the type of boundary lines around the pages.

The following types of the boundary lines are available.

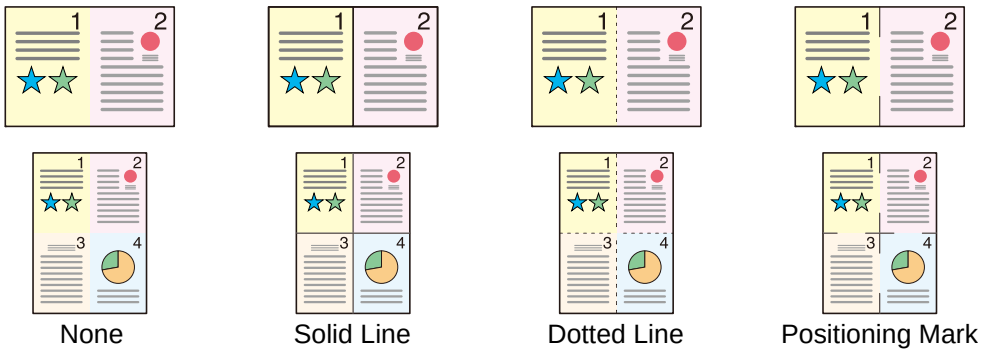

Item		Value	Description
Off			
2 in 1	**Layout**	L to R/T to B, R to L/B to T	Select the page layout of scanned originals.
	Border Line	None, Solid Line, Dotted Line, Positioning Mark	Select the boundary line type. Select [**Border Line**] to select the page boundary line, and select [**OK**].
	Original Orientation	Top Edge on Top, Top Edge on Left, Auto*1	Select the orientation of the original document top edge to scan correct direction. Select [**Original Orientation**] to choose orientation of the originals, either [**Top Edge on Top**] or [**Top Edge on Left**]. Then select [**OK**].
4 in 1	**Layout**	Right then Down, Left then Down, Down then Right, Down then Left	Select the page layout of scanned originals.
	Border Line	None, Solid Line, Dotted Line, Positioning Mark	Select the boundary line type. Select [**Border Line**] to select the page boundary line, and select [**OK**].
	Original Orientation	Top Edge on Top, Top Edge on Left, Auto*1	Select the orientation of the original document top edge to scan correct direction. Select [**Original Orientation**] to choose orientation of the originals, either [**Top Edge on Top**] or [**Top Edge on Left**]. Then select [**OK**].

*1 This function can only be used when the optional OCR Scan Activation Kit is installed.

Layout image

Item		Image
2 in 1	L to R/T to B	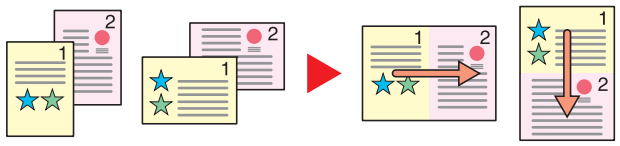
	R to L/B to T	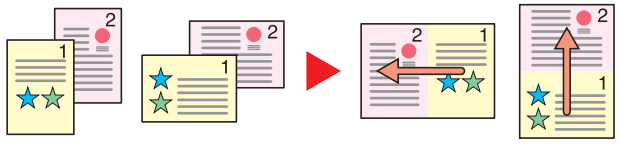
4 in 1	Right then Down	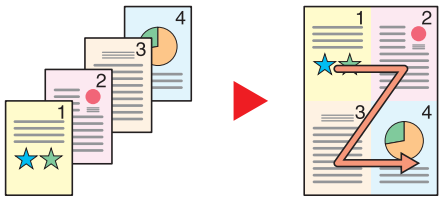
	Left then Down	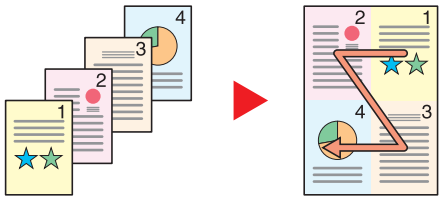
	Down then Right	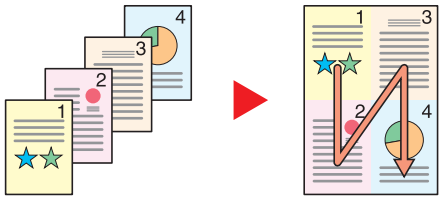
	Down then Left	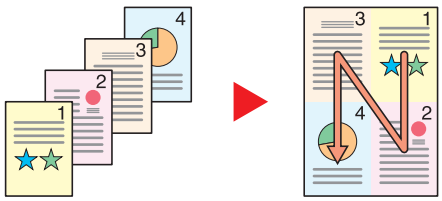

NOTE

- The paper sizes supported in Combine mode: A3, A4-R, A4, A5-R, A5, B4, B5-R, B5, Folio, 216×340 mm, SRA3, Ledger, Letter-R, Letter, Legal, Statement-R, Oficio II, 8K, 16K-R and 16K.
- When placing the original on the platen, be sure to copy the originals in page order.

Margin/Centering, Margin, Centering

Copy > Layout/Edit | Send > Advanced Setup | Custom Box > Functions | USB Memory > Functions

Copying/Printing

Add margins (white space). In addition, you can set the margin width and the back page margin.

Centering: Centers the original image on the paper when copying onto paper different from the original size.

NOTE

The default setting for margin width can be changed.

Margin Default (page 8-19)

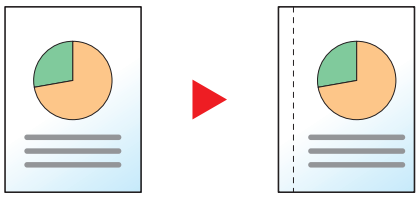

Item		Value	Description
Off			
Margin	**Left/Right**	Metric: -18 mm to +18 mm (in 1 mm increments) Inch: -0.75" to +0.75" (in 0.01" increments)	Set the margin width.*1 Select [**+**] or [**-**] to enter the margins for "Left/Right" and "Top/Bottom". Select [**# Keys**] to use the numeric keys for entry.
	Top/Bottom		
	Back Page	Auto, Manual	For duplex copying, select [**Back Page**] and select [**Auto**] or [**Manual**]. When [**Auto**] is selected, an appropriate margin is applied automatically on the rear page depending on a margin specified for the front page and a binding orientation. When [**Manual**] is set, you can set a different margin than the front on the back. Set the margin in the screen that is displayed. The setting selections are the same as for the front.
	Original Orientation	Top Edge on Top, Top Edge on Left, Auto*2	Select the orientation of the original document top edge to scan correct direction. Select [**Original Orientation**] to choose orientation of the originals, either [**Top Edge on Top**] or [**Top Edge on Left**]. Then select [**OK**].
Centering*3	**Original Orientation**	Top Edge on Top, Top Edge on Left, Auto*2	Select the orientation of the original document top edge to scan correct direction. Select [**Original Orientation**] to choose orientation of the originals, either [**Top Edge on Top**] or [**Top Edge on Left**]. Then select [**OK**].

*1 The input units can be changed in System Menu.
Measurement (page 8-15)
*2 This function can only be used when the optional OCR Scan Activation Kit is installed.
*3 Not displayed when printing from removable memory.

Sending/Storing

When you have sent/stored the original after specifying the original size and sending/storing size, depending on these sizes, a margin is created at the bottom, left, or right side of paper. By using the Centering function, the image is placed with a margin equally created for all edges.

(**Value**: [**Off**] / [**On**])

Border Erase

Copy > Layout/Edit | Send > Advanced Setup | Custom Box > Functions | USB Memory > Functions

Erases the black border that forms around the image.

The following modes are available.

Border Erase Sheet



Erases black borders around the single sheet original.

Border Erase Book

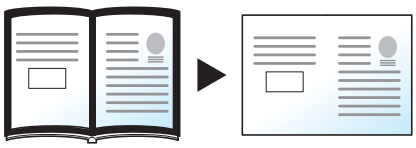

Erases black borders around the edges and in the middle of the original such as a thick book. You can specify the widths individually to erase the borders around the edges and in the center of the book.

Individual Border Erase

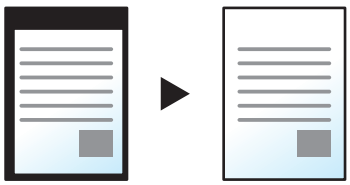

You can specify border erase widths individually for all edges.

NOTE

- The default setting for border erase width can be changed.
  Border Erase Default (page 8-19)
- The default width for back page can be changed.
  Border Erase to Back Page (page 8-19)

Item		Value	Description
Off			
Border Erase Sheet	**Border**	Metric: 0 mm to 50 mm (in 1 mm increments) Inch: 0.00" to 2.00" (in 0.01" increments)	Set the border erase width.*1 Set the value by selecting [**+**] or [**-**]. Select [**# Keys**] to use the numeric keys for entry.
	Back Page	Same as Front Page, Do Not Erase	For 2-sided originals, select [**Back Page**] and then select [**Same as Front Page**] or [**Do Not Erase**].
Border Erase Book	**Border**	Metric: 0 mm to 50 mm (in 1 mm increments) Inch: 0.00" to 2.00" (in 0.01" increments)	Set the border erase width.*1 Set the value by selecting [**+**] or [**-**]. Select [**# Keys**] to use the numeric keys for entry.
	Gutter		
	Back Page	Same as Front Page, Do Not Erase	For 2-sided originals, select [**Back Page**] and then select [**Same as Front Page**] or [**Do Not Erase**].
Individual Border Erase	**Top**	Metric: 0 mm to 50 mm (in 1 mm increments) Inch: 0.00 to 2.00" (in 0.01" increments)	Set the border erase width.*1 Set the value by selecting [**+**] or [**-**]. Select [**# Keys**] to use the numeric keys for entry.
	Bottom		
	Left		
	Right		
	Original Orientation	Top Edge on Top, Top Edge on Left, Auto*2	Select the orientation of the original document top edge to scan correct direction. Select [**Original Orientation**] to choose orientation of the originals, either [**Top Edge on Top**] or [**Top Edge on Left**]. Then select [**OK**].
	Back Page	Same as Front Page, Do Not Erase	For 2-sided originals, select [**Back Page**] and then select [**Same as Front Page**] or [**Do Not Erase**].

*1 The input units can be changed in System Menu.
➡ Measurement (page 8-15)
*2 This function can only be used when the optional OCR Scan Activation Kit is installed.

Booklet

Copy > Layout/Edit > Custom Box > Functions

The Booklet option allows you to copy sheet originals and produce booklets such as small brochures or pamphlets. A booklet, such as a magazine, is made by folding at the center.

You can print the cover page onto colored paper or thick paper. Paper for the cover is supplied from the multi purpose tray. To feed the cover paper from the cassette, refer to the following:

Paper Source for Cover (page 8-13)

NOTE

Using the optional 4,000-Sheet Finisher and the folding unit enables you to saddle stitch your copies (fold them in two with staples in the center). Supported paper sizes are A3, A4-R, B4, Ledger, Letter-R, Legal, Oficio II and 8K.

Type of original	Original size	Paper size
One-sided original, Two-sided original	All*1	A3, A4-R, A4, A5, B4, B5-R, B5, Ledger, Letter-R, Letter, Legal, Oficio II and 8K
Book Original	A3, A4-R, A5-R, B4, B5-R, Ledger, Letter-R and 8K	

*1 Except for custom sized originals.

Binding on the left side

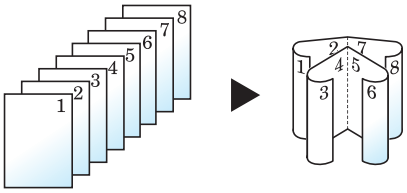

The folded copies can be read from left to right.

Binding on the right side

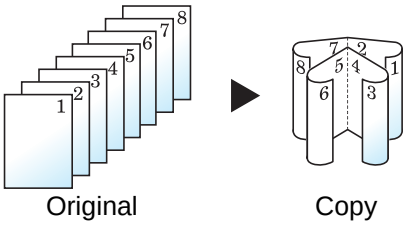

The folded copies can be read from right to left.

Top binding

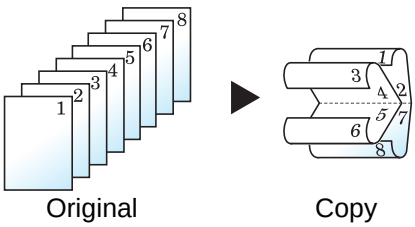

The folded copies can be read from top to bottom.

Copying

Item			Value	Description
Off				
1-sided >> Booklet	**Finishing**		Binding Left, Binding Right, Binding Top	Select the binding orientation of copies.
	Cover	**Off**		
		Cover: Front Cover Print Setting	Not Print, Front Only, Back Only, Duplex	Select whether to add the cover. Select the printing method for the cover to be inserted. Select [**Cover**], and then [**Cover**], and specify the print setting for the cover to be inserted. Select from [**Not Print**], [**Back Only**], [**Front Only**], and [**Duplex**], and press [**OK**].
		Cover: Back Cover Print Setting	Not Print, Front Only, Back Only, Duplex	
	Staple/Fold		Off, Fold Only, Saddle Stitch	To fold finished copies in half, select [**Staple/Fold**] and then select [**Fold Only**]. To use saddle stitching, select [**Staple/Fold**] and then select [**Saddle Stitch**].
	Original Orientation		Top Edge on Top, Top Edge on Left, Auto[*1]	Select the orientation of the original document top edge to scan correct direction. Select [**Original Orientation**] to choose orientation of the originals, either [**Top Edge on Top**] or [**Top Edge on Left**]. Then press [**OK**].
2-sided >> Booklet	**Original**		Binding Left/Right, Binding Top	Select the binding direction of originals.
	Finishing		Binding Left, Binding Right, Binding Top	Select the binding orientation of copies.
	Cover	**Off**		
		Cover: Front Cover Print Setting	Not Print, Front Only, Back Only, Duplex	Select whether to add the cover. Select the printing method for the cover to be inserted. Select [**Cover**], and then [**Cover**], and specify the print setting for the cover to be inserted. Select from [**Not Print**], [**Back Only**], [**Front Only**], and [**Duplex**], and press [**OK**].
		Cover: Back Cover Print Setting	Not Print, Front Only, Back Only, Duplex	
	Staple/Fold		Off, Fold Only, Saddle Stitch	To fold finished copies in half, select [**Staple/Fold**] and then select [**Fold Only**]. To use saddle stitching, select [**Staple/Fold**] and then select [**Saddle Stitch**].
	Original Orientation		Top Edge on Top, Top Edge on Left, Auto[*1]	Select the orientation of the original document top edge to scan correct direction. Select [**Original Orientation**] to choose orientation of the originals, either [**Top Edge on Top**] or [**Top Edge on Left**]. Then press [**OK**].

Item		Value	Description
Book >> Booklet[*2]	**Original**	Binding Left, Binding Right	Select the binding direction of originals.
	Finishing	Binding Left, Binding Right	Select the binding orientation of copies.
	Cover	Off, Cover	Select whether to add the cover. Select [**Cover**] to select [**Cover**], and select [**OK**].
	Staple/Fold	Off, Fold Only, Saddle Stitch	To fold finished copies in half, select [**Staple/Fold**] and then select [**Fold Only**]. To use saddle stitching, select [**Staple/Fold**] and then select [**Saddle Stitch**].

*1 This function can only be used when the optional OCR Scan Activation Kit is installed.
*2 [**Top Edge on Top**] is set for "Original Orientation".

Printing

Item			Value	Description
Off				
Booklet	**Binding**		Left, Right, Top	Select the binding orientation of copies.
	Cover	**Off**		
		Cover: Front Cover Print Setting	Not Print, Front Only, Back Only, Duplex	Select whether to add the cover. Select the printing method for the cover to be inserted. Select [**Cover**], and then [**Cover**], and specify the print setting for the cover to be inserted. Select from [**Not Print**], [**Back Only**], [**Front Only**], and [**Duplex**], and press [**OK**].
		Cover: Back Cover Print Setting	Not Print, Front Only, Back Only, Duplex	
	Staple/Fold		Off, Fold Only, Saddle Stitch	To fold finished copies in half, select [**Staple/Fold**] and then select [**Fold Only**]. To use saddle stitching, select [**Staple/Fold**] and then select [**Saddle Stitch**].

NOTE

- The number of sheets that can be folded or Saddle Stitch stapled varies depending on paper weight. For details, refer to the following:
  Folding Unit (page 11-31)
- When placing the original on the platen, be sure to place the originals in page order.

Duplex

Copy > Layout/Edit

Custom Box > Functions

USB Memory > Functions

Produces two-sided copies. You can also create single-sided copies from two-sided originals.

The following modes are available.

One-sided to Two-sided

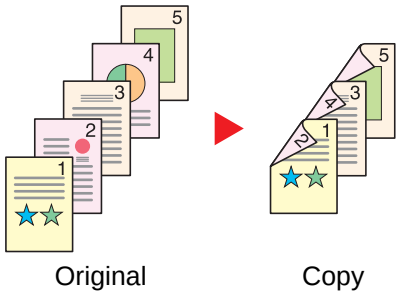

Produces two-sided copies from one-sided originals. In case of an odd number of originals, the back side of the last copy will be blank.

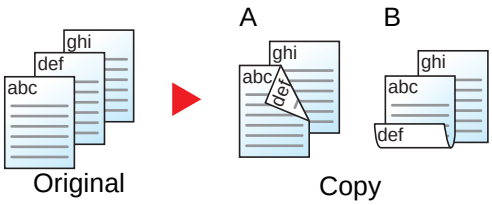

The following binding options are available.

A Binding Left/Right: Images on the second sides are not rotated.

B Binding Top: Images on the second sides are rotated 180 degrees. Copies can be bound on the top edge, facing the same orientation when turning the pages.

Two-sided to One-sided

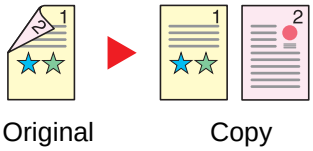

Copies each side of a two-sided original onto two individual sheets. The optional document processor is required.

The following binding options are available.

- Binding Left/Right: Images on the second sides are not rotated.
- Binding Top: Images on the second sides are rotated 180 degrees.

Two-sided to Two-sided

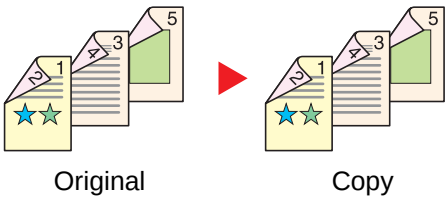

Produces two-sided copies from two-sided originals. The optional document processor is required.

NOTE

The paper sizes supported in Duplex mode: A3, A4-R, A4, A5-R, A5, A6-R, B4, B5-R, B5, B6-R, 216×340 mm, SRA3, Ledger, Letter-R, Letter, Legal, Statement-R, Executive, 12×18", Oficio II, Folio, 8K, 16K-R, 16K, ISO B5, Hagaki (Cardstock), Oufuku hagaki (Return postcard) and Custom 1 to 4.

Book to One-sided

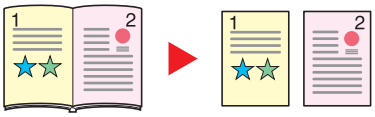

Produces a 1-sided copy of a 2-sided or open book original.
The following binding options are available.
Binding Left: Originals with facing pages are copied from left to right.
Binding Right: Originals with facing pages are copied from right to left.

NOTE

- The original sizes supported in Book to One-sided mode: A3, A4-R, A5-R, B4, B5-R, Ledger, Letter-R and 8K
- The paper sizes supported in Book to One-sided mode: A4-R, A4, A5, B5-R, B5, Letter-R, Letter, 16K-R and 16K

Book to Two-sided

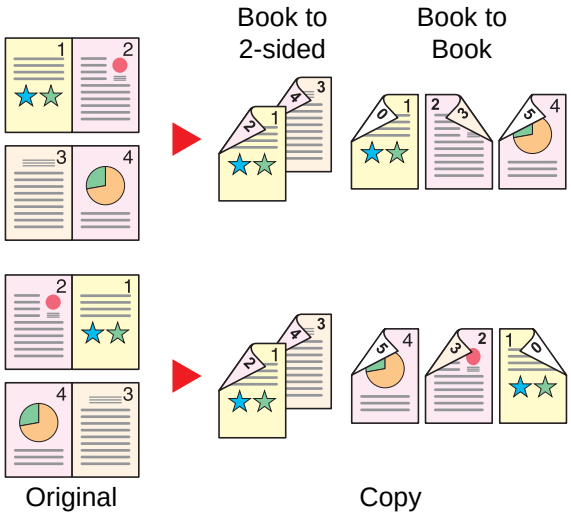

Produces two-sided copies from an open book original with facing pages.

NOTE

- The original sizes supported in Book to Two-sided mode: A3, A4-R, A5-R, B4, B5-R, Ledger, Letter-R and 8K
- The paper sizes supported in Book to Two-sided mode: A4-R, A4, A5, B5-R, B5, Letter-R, Letter, 16K-R and 16K

Copying

Prints 1-sided or open book originals to 2-sided, or 2-sided or open book originals to 1-sided. Select the binding orientation for original and finished documents.

Item		Value	Description
1-sided >> 1-sided		—	Disables the function.
1-sided >> 2-sided	**Finishing**	Binding Left/Right, Binding Top	Select the binding orientation of copies.
	Original Orientation	Top Edge on Top, Top Edge on Left, Auto*1	Select the orientation of the original document top edge to scan correct direction. Select [**Original Orientation**] to choose orientation of the originals, either [**Top Edge on Top**] or [**Top Edge on Left**]. Then select [**OK**].

Item		Value	Description
2-sided >> 1-sided	**Original**	Binding Left/Right, Binding Top	Select the binding orientation of originals.
	Original Orientation	Top Edge on Top, Top Edge on Left, Auto*1	Select the orientation of the original document top edge to scan correct direction. Select [**Original Orientation**] to choose orientation of the originals, either [**Top Edge on Top**] or [**Top Edge on Left**]. Then select [**OK**].
2-sided >> 2-sided	**Original**	Binding Left/Right, Binding Top	Select the binding direction of originals.
	Finishing	Binding Left/Right, Binding Top	Select the binding orientation of copies.
	Original Orientation	Top Edge on Top, Top Edge on Left, Auto*1	Select the orientation of the original document top edge to scan correct direction. Select [**Original Orientation**] to choose orientation of the originals, either [**Top Edge on Top**] or [**Top Edge on Left**]. Then select [**OK**].
Book >> 1-sided*2	**Original**	Binding Left, Binding Right	Select the binding direction of originals.
Book >> 2-sided*2	**Original**	Binding Left, Binding Right	Select the binding direction of originals.
	Finishing	Book>>2-sided, Book>>Book	Select the desired Duplex option.

*1 This function can only be used when the optional OCR Scan Activation Kit is installed.
*2 [**Top Edge on Top**] is set for "Original Orientation".

When placing the original on the platen, consecutively replace each original and press the [**Start**] key.

After scanning all originals, select [**Finish Scan**] to start copying.

Printing

Print a document to 1-sided or 2-sided sheets.

Item	Value	Description
1-sided	—	Disables the function.
2-sided	Left/Right	Prints a 2-sided document so that the sheets are aligned properly for binding on the left or right.
	Top	Prints a 2-sided document so that the sheets are aligned properly for binding on the top.

Cover



Adds a cover to the finished documents.

You can print the first page and/or the last page onto colored paper or thick paper fed from the different paper source than the regular one. The following two options are available. Paper for the cover is supplied from the multi purpose tray. To feed the cover paper from the cassette, refer to the following:

Paper Source for Cover (page 8-13)

The printing method can be set for the covers. Specify a print setting for each cover.

Item		Value	Description
Off			
Front Cover		Not Print, Front Only, Back Only*1, Duplex*1	Different paper has to be inserted for the first page of the document. Select [**Stop Printing**], [**Front Only**], [**Back Only**], or [**Duplex**] for the print setting of the inserted paper.
Front and Back Covers	**Front Cover Print Setting**	Not Print, Front Only, Back Only*1, Duplex*1	Different paper has to be inserted for the first page and last page of the document. Select [**Stop Printing**], [**Front Only**], [**Back Only**], or [**Duplex**] for the print setting of the inserted paper.
	Back Cover Print Setting	Not Print, Front Only, Back Only*1, Duplex*1	

*1 This item appears when finishing is set to 2-sided in "Duplex".

Duplex (page 6-52)

Form Overlay

Copy → Layout/Edit → Custom Box → Functions

Prints the original document overlaid with a form or image.

Once you scan and register the form, the form is overlaid onto the original. You can also use a form that is already registered in the Job Box.

Place the original for the form on top of the other originals. When using the optional document processor, the first page of the originals should be placed on the top.

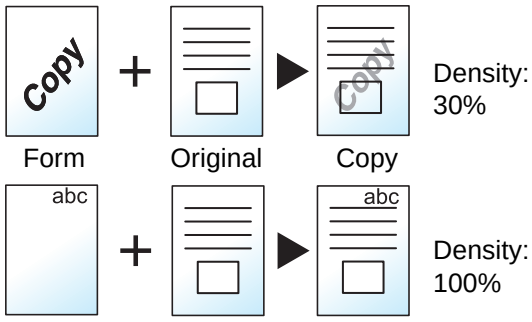

Item		Value	Description
Off			
Select Stored Form	**Density**	10% to 100%	Specify the density of the form to be overlaid. Select [**+**] or [**-**] in "Density".
	Finishing Image	Transparent	The form is overlaid on the document.
		Form on Original Image	The form is placed on top of the document.
		Original Image on Form	The form is placed under the document.
	Select Form[*1]	—	Select the form to be overlaid from Job Box. Select [**Select Form**] to display the job boxes that store documents which can be used as a form. Select the desired form from the list and select [**OK**].
Scan New Form[*2]	**Density**	10% to 100%	Specify the density of the form to be overlaid. Select [**+**] or [**-**] in "Density".
	Finishing Image	Transparent	The form is overlaid on the document.
		Form on Original Image	The form is placed on top of the document.
		Original Image on Form	The form is placed under the document.

*1 Form must be previously registered in Job Box.
➡ Form for Form Overlay (page 5-65)
*2 Not displayed when printing from the custom box.

Erase Shadowed Areas

Copy > Layout/Edit | Send > Advanced Setup | Custom Box > Functions | USB Memory > Functions

When scanning with the document processor or original cover open, erase the extra shaded area.

(Value: [**Off**] / [**On**])

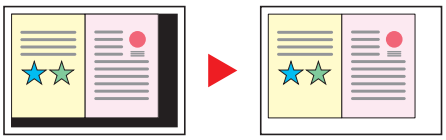

Page

Copy > Layout/Edit | Custom Box > Functions

Adds page numbers to the finished documents.

The available formats for numbering are [**-1-**], [**P.1**] and [**1/n**]. The format [**1/n**] prints the total number of pages in the place of "n".

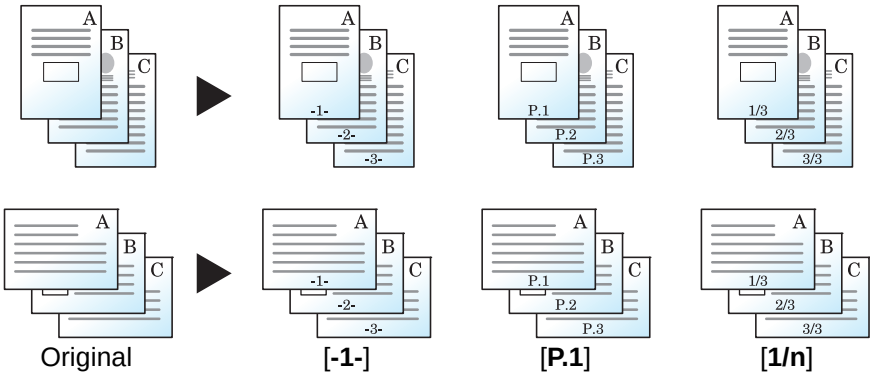

Select the numbering format from [**-1-**], [**P.1**] or [**1/n**].

Item		Value	Description
Off			
-1-, P.1, 1/n	**Position**	Top Left, Top Middle, Top Right, Bottom Left, Bottom Middle, Bottom Right, Detail	Select the print position of page number. Select [**Detail**] to specify the detailed page number position using numeric values, and to set the page number position ([**Same as Front Page**], [**Mirror Front Page**]) when a page number is placed on the back side of the paper in duplex printing.
	1st Page	1 to 10	To start page numbering from a page other than the first page, select [**+**] or [**-**] in "1st Page" to specify the starting page. Select [**# Keys**] to use the numeric keys for entry.
	Start #	1 to 999	To start the numbering with a number other than 1, select [**+**] or [**-**] in "Start Number" to specify the starting number. Select [**# Keys**] to use the numeric keys for entry.

Item			Value	Description
-1-, P.1, 1/n	**Count Blank Page**[*1]		—	When a scanned document contains blank pages, add a check mark if you require blank pages to be numbered. Remove the check mark to skip blank pages.
	Last Page		Auto, Manual (-10 to 0)	If you do not want page numbering through to the last page, select [**Last Page**]. Select [**Manual**] and select [**+**] or [**-**] to specify the final page to be numbered (a negative number of pages counting backwards from the last page), and then select [**OK**]. Specify the desired number up to -10. Select [**# Keys**] to use the numeric keys for entry.
	Font	**Size**	Font sizes registered in "Text (Text Stamp)" are displayed. ➡ Text (Text Stamp) (page 8-22)	Set the font size of page number.
		Style	None, Bold, Italic, Bold/Italic	Set the font style of page number. Select a font style by checking the checkbox.
		Font	Courier, Letter Gothic	Set the font of page number.
		Color	Black, Red, Green, Blue, Cyan, Magenta, Yellow, White	Set the color of page number.
		Density	10 to 100% (in 10% increments)	Set the density of the color of page number. Set the value by selecting [**+**] or [**-**].
		Display Pattern	Transparent, Clipping, Overwrite	Set the display method of page number.
	Denominator#[*2]		Auto, Manual (1 to 999)	The total number of pages "n" in the format [**1/n**] can be changed manually. Select [**Denominator #**] and select [**Manual**]. Select [**+**] or [**-**] to enter the total number of pages and select [**OK**]. Select [**# Keys**] to use the numeric keys for entry.
	Original Orientation		Top Edge on Top, Top Edge on Left, Auto[*3]	Select the orientation of the original document top edge to scan correct direction. Select [**Original Orientation**] to choose orientation of the originals, either [**Top Edge on Top**] or [**Top Edge on Left**]. Then select [**OK**].

*1 Not displayed when printing from the custom box.
*2 This item appears when [**1/n**] is selected.
*3 This function can only be used when the optional OCR Scan Activation Kit is installed.

Insert Sheets/Chapters

Copy > Layout/Edit

Insert a separator sheet, or make the first page of the chapter the front page when performing duplex printing.

The configured pages are displayed on the list.

Item				Value	Description
Off					
On	**Add**	**Separator**	**Separator Sheet**	1 to 998	Enter document page numbers where separators get inserted. Select [**+**] or [**-**] to enter the page number. Select [**# Keys**] to use the numeric keys for entry.
			Paper Source	Cassette 1 to 5, Multi purpose tray	Select the source of the paper for the separator.
		Chapter	**Chapter Page**	2 to 998	Enter the page numbers of the original document where you want to insert the chapters. Select [**+**] or [**-**] to enter the page number. Select [**# Keys**] to use the numeric keys for entry.
	Edit			—	Change the configuration of the chapter page and separator. The method of operation is the same as that of a new addition.
	Delete			—	Delete the page selected in the list.
	Sheets Setting			Not Print, Front Only, Back Only*1, Duplex*1	Select [**Not Print**], [**Front Only**], [**Back Only**], or [**Duplex**] for the print setting of the inserted paper.

*1 This item appears when finishing is set to 2-sided in "Duplex".

Duplex (page 6-52)

Memo Page

Copy > Layout/Edit

Delivers copies with a space for adding notes.

You can also print two originals onto the same sheet with a space or add lines to indicate page boundaries.

Select [**Layout A**] or [**Layout B**] and select the page layout from "Layout".

NOTE

The paper sizes supported in Memo mode: A3, A4-R, A4, A5-R, A5, B4, B5-R, B5, 216×340 mm, Ledger, Letter-R, Letter, Legal, Statement-R, Oficio II, Folio, 8K, 16K-R and 16K

Layout A

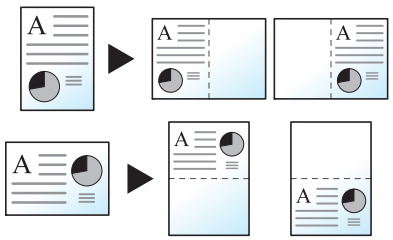

Original Copy

Reduces images of each original page for printing onto half of a page, leaving the other half blank for notes.

Layout B

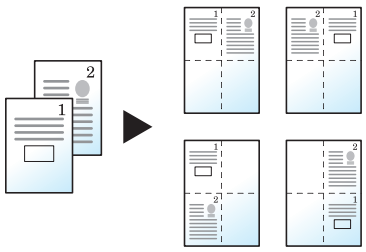

Original Copy

Reduces images of two original pages for printing onto half of a page, leaving the other half blank for notes.

Item		Value	Description
Off			
Layout A	**Layout**	Left/Top, Right/Bottom	Select how to lay out the pages of scanned original.
	Border Line	None, Solid Line, Dotted Line, Positioning Mark	Select the boundary line type. Select [**Border Line**] to select the page boundary line, and select [**OK**].
	Original Orientation	Top Edge on Top, Top Edge on Left, Auto*1	Select the orientation of the original document top edge to scan correct direction. Select [**Original Orientation**] to choose orientation of the originals, either [**Top Edge on Top**] or [**Top Edge on Left**]. Then select [**OK**].

Item		Value	Description
Layout B	**Layout**	Top L to R, Top R to L, Top L to B, Top R to B	Select how to lay out the pages of scanned original.
	Border Line	None, Solid Line, Dotted Line, Positioning Mark	Select the boundary line type. Select [**Border Line**] to select the page boundary line, and select [**OK**].
	Original Orientation	Top Edge on Top, Top Edge on Left, Auto*1	Select the orientation of the original document top edge to scan correct direction. Select [**Original Orientation**] to choose orientation of the originals, either [**Top Edge on Top**] or [**Top Edge on Left**]. Then select [**OK**].

*1 This function can only be used when the optional OCR Scan Activation Kit is installed.

Poster

Copy > Layout/Edit

To use this device to make copies larger than the maximum paper size, use Poster mode to separate and copy an enlarged image onto multiple pages.

The completed copies have overlapping areas. A single large page can be created by pasting those areas together.

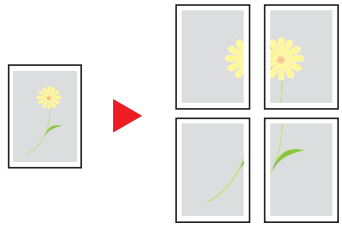

Original Copy

Choose one of the following 3 enlargement settings:

Item	Value	Description
Off		
Copy Size	Metric: A0, A1, A2, Inch: 34 × 44", 22 × 34", 17 × 22"	Metric: Select A0, A1 or A2 as finish size. Copy is enlarged according to the selected paper size. Inch: Select 34 × 44", 22 × 34" or 17 × 22" as finish size. Copy is enlarged according to selected paper size.
Zoom Priority	100 to 400% (in 1% increments)	Image will be output on the necessary number of copies for the specified zoom size. Select [**+**] or [**-**] to change the displayed magnification as desired. Select [**# Keys**] to use the numeric keys for entry.
Number of Sheets	2 sheets, 4 sheets, 8 sheets	Copy is enlarged according to the specified number of sheets.

Image Repeat

Copy → Layout/Edit

Tiles the 1 copied sheet with an original image. You can also specify the area of the original to repeat.

Zoom Priority

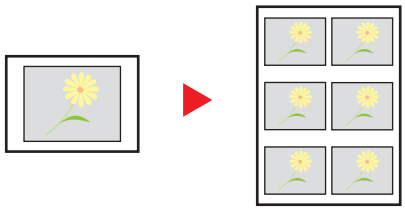

Original Copy

Repeat an image of specified zoom ratio.

Double Copy

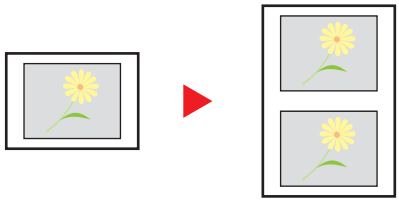

Original Copy

Copy two image.

Item	Value		Description
Off			
Zoom Priority	25 to 400% (in 1% increments)		Set the default screen. Select [**+**] or [**-**] to change the displayed magnification as desired. Select [**# Keys**] to use the numeric keys for entry.
Specify Repeat Area	**Off**		
	On: Start	Metric*1 X1: 0 to 431 mm Y1: 0 to 296 mm Inch X1: 0.00 to 16.99" Y1: 0.00 to 11.68"	To set the area of the original to be repeated, select [**On**] for "Specify Repeat Area". Select [**+**] or [**-**] to input the area of the original to be repeated. Select [**# Keys**] to use the numeric keys for entry. Y1: Length from top left of platen to top edge of repeat area X1: Length from top left of platen to left edge of repeat area Y2: Height of repeat area X2: Width of repeat area 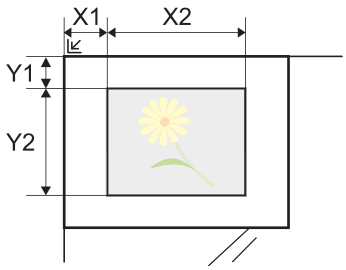
	On: Area	Metric X2: 1 to 432 mm Y2: 1 to 297 mm Inch X2: 0.01 to 17.00" Y2: 0.01 to 11.69"	
Double Copy	—		Makes 2 copies of the same original on a single sheet. For example, you can double-copy an A5 original onto an A4 sheet which you then cut in half to make 2 copies that are identical to the original.

*1 The input units can be changed in System Menu.

Measurement (page 8-15)

Text Stamp

Copy > Layout/Edit > Send > Advanced Setup > Custom Box > Functions > USB Memory > Functions

You can add a text stamp on the documents.

Copying/Printing

NOTE

This cannot be set when Text Stamp is set in the system settings.

Printing Jobs (page 8-23)

Item		Value	Description
Off			
On	**Stamp**	Keyboard, Template 1 to 8	Select [**Keyboard**] and enter the text string to be printed, or select a text stamp from the displayed templates. **NOTE** Templates that have been set will appear. For details on registering templates, refer to the following: Text (Text Stamp) (page 8-22)
	Stamp Method	Each Print Page, Each Original Page	Select the stamp method. Select [**Stamp Method**] and set the stamp method for text stamp.
	Position	Top Left, Top Middle, Top Right, Middle Left, Center, Middle Right, Bottom Left, Bottom Middle, Bottom Right, Detail	Set the stamp position to be printed. Select [**Position**] and select the text stamp position. Select [**Detail**] to specify the detailed stamp position using numeric values, and to set the stamp position and angle when a stamp is placed on the back side of the paper in duplex printing.

Item			Value	Description
On	**Font**	**Size**	Registered font sizes are displayed. For details on registering font sizes, refer to the following: Font (Text Stamp) (page 8-22)	Set the font size of text stamp.
		Character Border	Off, Circle, Rectangle, Underline	Set the character border and underline.
		Style	None, Bold, Italic, Bold/Italic	Set the font style of text stamp. Select a font style by checking the checkbox.
		Font	Courier, Letter Gothic	Set the font of text stamp.
		Color	Black, Red, Green, Blue, Cyan, Magenta, Yellow, White	Set the color of text stamp.
		Density	10 to 100% (in 10% increments)	Set the density of text stamp color. Set the value by selecting [**+**] or [**-**].
		Display Pattern	Transparent, Clipping, Overwrite	Set the display method of text stamp.
	Original Orientation		Top Edge on Top, Top Edge on Left, Auto*1	Select the orientation of the original document top edge to scan correct direction. Select [**Original Orientation**] to choose orientation of the originals, either [**Top Edge on Top**] or [**Top Edge on Left**]. Then select [**OK**].

*1 This function can only be used when the optional OCR Scan Activation Kit is installed.

Sending/Storing

NOTE

This cannot be set when Text Stamp is set in the system settings.

Sending Jobs (page 8-25)

Storing Jobs (page 8-27)

Item			Value	Description
Off				
On	**Stamp**		Keyboard, Template 1 to 8	Select [**Keyboard**] and enter the text string to be printed, or select a text stamp from the displayed templates. **NOTE** Templates that have been set will appear. For details on registering templates, refer to the following: Text (Text Stamp) (page 8-22)
	Position		Top Left, Top Middle, Top Right, Middle Left, Center, Middle Right, Bottom Left, Bottom Middle, Bottom Right, Detail	Set the stamp position to be printed. Select [**Position**] and select the text stamp position. Select [**Detail**] to set the stamp position using numeric values, and to set the stamp angle.
	Font	**Size**	Registered font sizes are displayed. For details on registering font sizes, refer to the following: Font (Text Stamp) (page 8-22)	Set the font size of text stamp.
		Character Border	Off, Circle, Rectangle, Underline	Set the character border and underline.
		Style	None, Bold, Italic, Bold/Italic	Set the font style of text stamp. Select a font style by checking the checkbox.
		Font	Courier, Letter Gothic	Set the font of text stamp.
		Color	Black, Red, Green, Blue, Cyan, Magenta, Yellow, White	Set the color of text stamp.
		Density	10 to 100% (in 10% increments)	Set the density of text stamp color. Set the value by selecting [**+**] or [**-**].
		Display Pattern	Transparent, Clipping, Overwrite	Set the display method of text stamp.
	Original Orientation		Top Edge on Top, Top Edge on Left, Auto*1	Select the orientation of the original document top edge to scan correct direction. Select [**Original Orientation**] to choose orientation of the originals, either [**Top Edge on Top**] or [**Top Edge on Left**]. Then select [**OK**].

*1 This function can only be used when the optional OCR Scan Activation Kit is installed.

Bates Stamp



You can add a bates stamp on the documents.

Copying/Printing

NOTE

This cannot be set when Bates Stamp is set in the system settings.

Printing Jobs (page 8-23)

Item		Value	Description
Off			
On	**Stamp**	Date, User Name, Serial Number, Numbering, Text 1, Text 2	Set the stamp to be printed. When [**Text 1**] or [**Text 2**] is selected, select [**Change**] below and enter the text string. If you selected [**Date**], select [**Date Format**] and select [**MM/DD/YYYY**], [**DD/MM/YYYY**], or [**YYYY/MM/DD**] to set the date format. To set [**Numbering**], select [**Numbering Default**] and set the starting sequence number (1 to 9999999). If you select [**Fixed Digit Number**] > [**On**], you can set the number of digits of the serial number (1 to 7 digits).
	Position	Top Left, Top Middle, Top Right, Middle Left, Center, Middle Right, Bottom Left, Bottom Middle, Bottom Right, Detail	Set the stamp position to be printed. Select [**Position**] and select the bates stamp position. Select [**Detail**] to specify the detailed stamp position using numeric values, and to set the stamp position when a stamp is placed on the back side of the paper in duplex printing.

Item			Value	Description
On	**Font**	**Size**	Registered font sizes are displayed. For details on registering font sizes, refer to the following: ➔ Font (Bates Stamp) (page 8-22)	Set the font size of bates stamp.
		Style	None, Bold, Italic, Bold/Italic	Set the font style of bates stamp. Select a font style by checking the checkbox.
		Font	Courier, Letter Gothic	Set the font of bates stamp.
		Color	Black, Red, Green, Blue, Cyan, Magenta, Yellow, White	Set the color of the bates stamp.
		Density	10 to 100% (in 10% increments)	Set the density of bates stamp color. Set the value by selecting [**+**] or [**-**].
		Display Pattern	Transparent, Clipping, Overwrite	Set the display method of the bates stamp.
	Original Orientation		Top Edge on Top, Top Edge on Left, Auto*1	Select the orientation of the original document top edge to scan correct direction. Select [**Original Orientation**] to choose orientation of the originals, either [**Top Edge on Top**] or [**Top Edge on Left**]. Then select [**OK**].

*1 This function can only be used when the optional OCR Scan Activation Kit is installed.

Sending/Storing

NOTE

This cannot be set when Bates Stamp is set in the system settings.

Sending Jobs (page 8-26)

Storing Jobs (page 8-27)

Item			Value	Description
Off				
On	**Stamp**		Date, User Name, Serial Number, Numbering, Text 1, Text 2	Set the stamp to be printed. When [**Text 1**] or [**Text 2**] is selected, press [**Change**] below and enter the text string. If you selected [**Date**], press [**Date Format**] and select [**MM/DD/YYYY**], [**DD/MM/YYYY**], or [**YYYY/MM/DD**] to set the date format. To set [**Numbering**], select [**Numbering Default**] and set the starting sequence number (1 to 9999999). If you select [**Fixed Digit Number**] > [**On**], you can set the number of digits of the serial number (1 to 7 digits).
	Position		Top Left, Top Middle, Top Right, Middle Left, Center, Middle Right, Bottom Left, Bottom Middle, Bottom Right, Detail	Set the stamp position to be printed. Select [**Position**] and select the bates stamp position. Select [**Detail**] to specify the stamp position using numeric values.
	Font	**Size**	Registered font sizes are displayed. For details on registering font sizes, refer to the following: Font (Bates Stamp) (page 8-22)	Set the font size of bates stamp.
		Style	None, Bold, Italic, Bold/Italic	Set the font style of bates stamp. Select a font style by checking the checkbox.
		Font	Courier, Letter Gothic	Set the font of bates stamp.
		Color	Black, Red, Green, Blue, Cyan, Magenta, Yellow, White	Set the color of bates stamp.
		Density	10 to 100% (in 10% increments)	Set the density of bates stamp color. Set the value by selecting [**+**] or [**-**].
		Display Pattern	Transparent, Clipping, Overwrite	Set the display method of bates stamp.
	Original Orientation		Top Edge on Top, Top Edge on Left, Auto*1	Select the orientation of the original document top edge to scan correct direction. Select [**Original Orientation**] to choose orientation of the originals, either [**Top Edge on Top**] or [**Top Edge on Left**]. Then select [**OK**].

*1 This function can only be used when the optional OCR Scan Activation Kit is installed.

Continuous Scan

Copy > Advanced Setup | Send > Advanced Setup | Custom Box > Functions | USB Memory > Functions

Scans a large number of originals in separate batches and then produce as one job.

Originals will be scanned continuously until you select [**Finish Scan**].

Select [**On**] to use continuous scanning. To use Job Build, select [**Job Build**]. You can set the functions that appear on the screen during scanning.

(**Value**: [**Off**] / [**On**] / [**Job Build**])

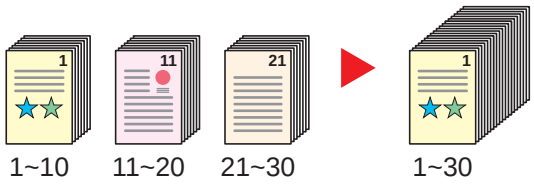

Job Build

When [**Job Build**] is selected when copying or printing, the binding orientation for finished documents can be selected from [**Binding Left**], [**Binding Right**] or [**Binding Top**].

The following functions can be selected during scanning.

Item	Description
Next Copy: On Back	In duplex copying, prints on the back side if the next page is to be printed on the front side. Select [**Next Copy: On Back**] to use this function.
Next Copy: On Front	In duplex copying, prints on the front side if the next page is to be printed on the back side. Select [**Next Copy: On Front**] to use this function.
Sheet Insertion	Inserts a blank paper in the next page. Select [**Sheet Insertion**] to use this function.

Auto Image Rotation

Copy > Advanced Setup

Automatically rotates the image 90 degrees when the sizes of the original and the loaded paper matches but the orientations are different.

(**Value**: [**Off**] / [**On**])

NOTE

- You can select whether to rotate the image automatically in the default settings.
  Auto Image Rotation (Copy) (page 8-19)
- When you have enabled this function, you can select how the images are rotated.
  Auto Image Rotation Action (page 8-33)

Negative Image

Copy > Advanced Setup

Inverts black and white portions of the image for printing.

(**Value**: [**Off**] / [**On**])

NOTE

This function is only available for black and white copy mode.

Mirror Image

Copy > Advanced Setup

Copies the mirrored image of the original.

(**Value**: [**Off**] / [**On**])

Job Finish Notice

Copy > Advanced Setup / Send > Advanced Setup / Custom Box > Functions / USB Memory > Functions

Sends E-mail notice when a job is complete. It is also available that send a notice when a job is interrupted.

Users can be notified of the completion of a job while working at a remote desk, saving the time spent waiting beside the machine to finish.

NOTE

PC should be configured in advance so that E-mail can be used.

Command Center RX (page 2-61)

E-mail can be sent to a single destination.

Item		Description
Off		
Address Book		Select the notification destination from the address book.
	Detail	Information on the selected destination can be viewed.
	Address Book	Select the notification destination on the address book screen, then select [**OK**].
	Notify when interrupted	Add a check mark if you require an e-mail notification when a job is interrupted.
Address Entry		Enter E-mail address directly. Select [**E-mail Address**], enter the address (up to 128 characters) and select [**OK**].
	Notify when interrupted	Add a check mark if you require an e-mail notification when a job is interrupted.

File Name Entry



Adds a file name.

Additional information such as job number and date and time can also be set. You can check a job history or job status using the file name, date and time, or job number specified here.

Select [**File Name**], enter the file name (up to 32 characters), and select [**OK**].

To add date and time, select [**Date and Time**]. To add job number, select [**Job No.**]. The added information will be displayed in "Additional Info".

Priority Override



Suspends the current job and gives a new job top priority.

The suspended job resumes after the other job is finished.

(**Value**: [**Off**] / [**On**])

NOTE

- This function is not available if current job was an override.
- Priority override may not be available depending on the status of the current print job and memory usage. In this case, try the interrupt copy.

Interrupt Copy (page 5-23)

Repeat Copy

Copy | Advanced Setup

Enables additional copies in the desired quantity as necessary after a copy job is completed.

For confidential documents, you can set up a password for the use of Repeat Copy. In such a case, the correct password must be entered to perform Repeat Copy.

To register a password, select [**# Keys**] and enter a 4-digit password.

IMPORTANT

- **A Repeat Copy job is cleared when the power switch is turned off.**
- **If you forget the password, Repeat Copy cannot be performed for that document. Make a note of the password beforehand if necessary.**

(**Value**: [**Off**] / [**On**])

Repeat Copy is not available when the machine is equipped with the optional Data Security Kit.

When the maximum number of Repeat Copy jobs to retain in the document box is set to 0 (zero), this function cannot be used.

Repeat Copy Job Retention (page 8-39)

You can select Repeat Copy as the default setting.

Repeat Copy (page 8-21)

Giving a file name to a copy job will facilitate identification of the data when copying.

File Name Entry (page 6-71)

Repeat Copy

The Repeat Copy jobs are stored in the Job Box. Refer to Outputting Repeat Copy Jobs to print out the Repeat Copy jobs.

Outputting Repeat Copy Jobs (page 5-65)

OHP Backing Sheet

Copy | Advanced Setup

When two or three OHP transparencies are stacked on top of each other, static electricity may make them difficult to handle. When using OHP Backing Sheet, a paper sheet is automatically inserted between each transparency, making them easier to handle. Also, the same original page can be printed to the backing sheet for multiple page printing.

NOTE

For transparency film that can be used, refer to the following:

Transparencies (page 11-16)

Never load OHP transparencies into trays or cassettes other than the multi purpose tray.

When OHP Backing Sheet is set, the multi purpose tray paper type is automatically set to "Transparency".

If the optional 1,000-Sheet Finisher or 4,000-Sheet Finisher is installed, you may need to specify the output destination for finished copies.

Paper Output (page 6-30)

Blank Sheet

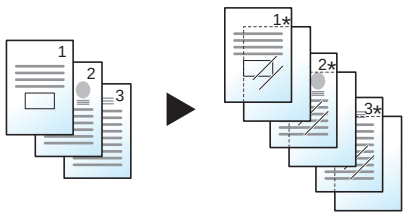

Original Copy

Outputs a blank backing sheet after printing to a transparency. (* denotes transparency.)

Copied Sheet

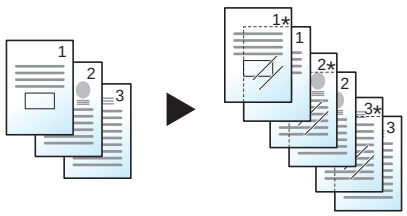

Original Copy

After printing to a transparency, copies the same original image to the backing sheet paper. (* denotes transparency.)

IMPORTANT

- **Fan through the transparencies before loading.**
- **Up to 1 transparency can be loaded at one time.**
- **Be sure that paper of the same size and orientation as the transparencies is loaded in the cassette.**

Item	Value	Description
OFF		
Blank Sheet, Copied Sheet	Auto, Cassette 1 (to 5)	Select the media to be fed. When [**Auto**] is selected, the machine automatically selects media that matches the size of the original.

DP Read Action

Copy > Advanced Setup

When the document processor is used, select the scanning operation for the document processor. This function is displayed when the document processor is installed.

Item	Description
Speed Priority	Gives priority to scanning speed.
Quality Priority	Gives priority to image quality at a slightly slower scan speed.

Skip Blank Page

Copy > Advanced Setup
Send > Advanced Setup
Custom Box > Functions
USB Memory > Functions

When there are blank pages in a scanned document, this function skips the blank pages and prints only pages that are not blank.

Blank pages can be set as pages that include ruled lines and a small number of characters.

The machine detects blank pages, saving unnecessary printing without the need to check for blank pages in the document.

Select [**Blank Pages + Ruled Lines**], [**Blank Pages Only**] or [**Blank Pages + Some Text**] in [**On**].

NOTE

The originals with punched holes or originals printed on a colored substrate may not be recognized as blank pages.

2-sided/Book Original, Book Original

Send > Org./Sending Data Format

Custom Box > Functions

USB Memory > Functions

Select the type and orientation of the binding based on the original.

Item		Value	Description
1-sided		—	"2-sided/Book Original" is not set.
2-sided[*1]	**Binding**	Binding Left/ Right, Binding Top	Select the binding orientation of originals.
	Original Orientation	Top Edge on Top, Top Edge on Left, Auto[*2]	Select the orientation of the original document top edge to scan correct direction. Select [**Original Orientation**] to choose orientation of the originals, either [**Top Edge on Top**] or [**Top Edge on Left**]. Then select [**OK**].
Book[*3]	**Binding**	Binding Left, Binding Right	Select the binding orientation of originals.

*1 Available when the optional document processor is used.
*2 This function can only be used when the optional OCR Scan Activation Kit is installed.
*3 [**Top Edge on Top**] is set for "Original Orientation".

Sample image

Value		Image
2-sided	**Binding Left/Right**	
	Binding Top	
Book	**Binding Left**	
	Binding Right	

Sending Size

Send > Org./Sending Data Format > Custom Box > Functions

Select size of image to be sent.

Select [**Standard Sizes 1**], [**Standard Sizes 2**], or [**Others**] to select the storing size.

Item	Value	Description
Standard Sizes 1	Metric models: Same as Original Size, A3, A4, A5, A6, B4, B5, B6, Folio, 216×340 mm Inch models: Same as Original Size, Ledger, Letter, Legal, Statement, 11×15", Oficio II	Select from Same as Original Size or Standard Size.
Standard Sizes 2	Metric models: Ledger, Letter, Legal, Statement, 11×15", Oficio II, 8K, 16K Inch models: A3, A4, A5, A6, B4, B5, B6, Folio, 8K, 16K, 216×340 mm	Select from standard sizes except Standard Sizes 1.
Others	Hagaki (Cardstock), Oufuku hagaki (Return postcard)	Select from Hagaki (Cardstock).

Relationship between Original Size, Sending Size, and Zoom

Original Size (page 6-18), Sending Size, and Zoom (page 6-41) are related to each other. For details, see the table below.

Original size and sending size are	the same	different
Original Size (page 6-18)	Specify as necessary.	Specify as necessary.
Sending Size	Select [**Same as Original Size**].	Select the desired size.
Zoom (page 6-41)	Select [**100%**] (or [**Auto**]).	Select [**Auto**].

NOTE

When you specify the sending size that is different from the original size, and select the zoom of [**100%**], you can send the image as the actual size (No Zoom).

File Format

Send > Org./Sending Data Format

Custom Box > Functions

USB Memory > Functions

Specify the image file format. Image quality level can also be adjusted.

Select the file format from [**PDF**], [**TIFF**], [**JPEG**], [**XPS**], [**OpenXPS**], and [**High Comp. PDF**].

When the color mode in scanning has been selected for Grayscale or Full Color, set the image quality.

If you selected [**PDF**] or [**High Comp. PDF**], you can specify encryption or PDF/A settings.

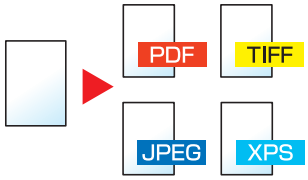

Item	Value	Color mode
PDF *1*2*3	1 Low Quality (High Comp.) to 5 High Quality (Low Comp.)	Auto Color (Color/Grayscale), Auto Color (Color/Black and White), Full Color, Grayscale, Black and White
TIFF	1 Low Quality (High Comp.) to 5 High Quality (Low Comp.)	Auto Color (Color/Grayscale), Auto Color (Color/Black and White), Full Color, Grayscale, Black and White
JPEG	1 Low Quality (High Comp.) to 5 High Quality (Low Comp.)	Auto Color (Color/Grayscale), Full Color, Grayscale
XPS	1 Low Quality (High Comp.) to 5 High Quality (Low Comp.)	Auto Color (Color/Grayscale), Auto Color (Color/Black and White), Full Color, Grayscale, Black and White
OpenXPS	1 Low Quality (High Comp.) to 5 High Quality (Low Comp.)	Auto Color (Color/Grayscale), Auto Color (Color/Black and White), Full Color, Grayscale, Black and White
High Comp. PDF *1*2	Compression Ratio Priority, Standard, Quality Priority	Auto Color (Color/Grayscale), Auto Color (Color/Black and White), Full Color, Grayscale

*1 You can create Searchable PDF file by running OCR on the scanned document.
OCR Text Recognition (Option) (page 6-78)

*2 Set the PDF/A. (**Value**: [**Off**] / [**PDF/A-1a**] / [**PDF/A-1b**] / [**PDF/A-2a**] / [**PDF/A-2b**] / [**PDF/A-2u**]).

*3 Set PDF encryption.
PDF Encryption Functions (page 6-79)

NOTE

- When [High Comp. PDF] is selected, you cannot adjust the image quality.
- You can use PDF encryption functions.
  PDF Encryption Functions (page 6-79)
- If encryption is enabled, PDF/A settings cannot be specified.

OCR Text Recognition (Option)

When [**PDF**] or [**High Comp. PDF**] is selected for the file format, you can create Searchable PDF file by running OCR on the scanned document. Select [**OCR Text Recognition**], and then [**On**], select the language of the document, and select [**OK**].

Item		Description
Off		Do not create Searchable PDF file.
On		Create Searchable PDF file. Select the language to extract from the languages that appear on the touch panel.
	Auto Image Rotation	Rotates image automatically by recognizing text orientation. **Value: Off, On**

NOTE

- This function can only be used when the optional OCR Scan Activation Kit is installed.
  Scan Extension Kit(A) "OCR Scan Activation Kit" (page 11-7)
- This function cannot be set when you send from the Custom Box.
- If the proper language is not selected, PDF creation may take a long time or the creation may fail.
  The default language can be changed in System Menu.
  Primary OCR Language (page 8-21)
- If you do not set an original in the correct orientation, the text of the document may not be recognized as characters. In addition, it may take some time to create the PDF. Check the following:
  - The original orientation is correct.
  - When setting the originals with the mixed orientation at once, [**On**] is selected for [**Auto Image Rotation**].

    If you frequently use the originals with the mixed orientation, the default of [**Auto Image Rotation**] can be changed in System Menu.

  OCR Text Recognition (page 8-20)
- The accuracy of the text recognition depends on the original condition. The following condition may result in decreasing the recognition accuracy.
  - Repeatedly copied documents (as copied copy)
  - Received faxes (with low resolution)
  - Originals with the character space too narrow or wide
  - Originals with the lines on the text
  - Originals with the special fonts
  - Binding part of the book
  - A handwritten texts

PDF Encryption Functions

If you have selected PDF or High Comp. PDF for file format, you can restrict the access level for displaying, printing, and editing PDF's by assigning a secure password.

Select [**Others**], [**PDF**] or [**High Comp. PDF**] in [**File Format**], and select [**Encryption**].

Items that can be set vary depending on the setting selected in [**Compatibility**].

When [Acrobat 3.0 and later, Encryption Level: Middle(40-bit)] is selected

Item	Value	Description
Password to Open Document	Off, On	Enter the password to open the PDF file. Select [**On**], enter a password (up to 256 characters) and then select [**Next**]. Enter the password again for confirmation, and select [**OK**].
Password to Edit/Print Document	Off, On	Enter the password to edit the PDF file. Select [**On**], enter a password (up to 256 characters) and then select [**Next**]. Enter the password again for confirmation, and select [**OK**]. When you have entered the password and selected [**Detail**] to edit/print document, you can specifically limit the operation.
Printing Allowed	Not Allowed, Allowed	Restricts printing of the PDF file.
Changes Allowed	Not Allowed	Disables the change to the PDF file.
	Commenting	Can only add commenting.
	Page Layout except extracting Pages	Can change the page layout except extracting the pages of the PDF file.
	Any except extracting Pages	Can conduct all operations except extracting the pages of the PDF file.
Copying of Text/ Images/Others	Disable, Enable	Restricts the copying of text and objects on the PDF file.

When [Acrobat 5.0 and later, Encryption Level: High(128-bit)] is selected

Item		Value	Description
Password to Open Document		Off, On	Enter the password to open the PDF file. Select [**On**], enter a password (up to 256 characters) and then select [**Next**]. Enter the password again for confirmation, and select [**OK**].
Password to Edit/Print Document		Off, On	Enter the password to edit the PDF file. Select [**On**], enter a password (up to 256 characters) and then select [**Next**]. Enter the password again for confirmation, and select [**OK**]. When you have entered the password and selected [**Detail**] to edit/print document, you can specifically limit the operation.
	Printing Allowed	Not Allowed	Disables the printing of PDF file.
		Allowed (Low Resolution only)	Can print the PDF file only in low resolution.
		Allowed	Can print the PDF file in original resolution.
	Changes Allowed	Not Allowed	Disables the change to the PDF file.
		Inserting/Deleting/Rotating Pages	Can only insert, delete, and rotate the pages of the PDF file.
		Commenting	Can only add commenting.
		Any except extracting Pages	Can conduct all operations except extracting the pages of the PDF file.
	Copying of Text/ Images/Others	Disable, Enable	Restricts the copying of text and objects on the PDF file.

File Separation

Send > Org./Sending Data Format > Custom Box > Functions > USB Memory > Functions

Creates several files by dividing scanned original data page by specified number of pages, and sends the files.



NOTE

A three-digit serial number such as "abc_001.pdf, abc_002.pdf..." is attached to the end of the file name.

Item		Value	Description
Off			
On			Set file separation. Select [**+**] or [**-**] to specify the number of pages. Select [**# Keys**] to use the numeric keys for entry.
	Attach File to E-mail	All Files in 1 E-mail, 1 file per E-mail	Select how to attach the files to the E-mail. Select [**All files in 1 E-mail**] to attach and send all files in a single E-mail. Select [**1 file per E-mail**] to attach and send 1 file per E-mail.

Scan Resolution

Send > Color/ Image Quality > Custom Box > Functions > Color/ Image Quality > USB Memory > Functions

Select fineness of scanning resolution.

(**Value**: [**600 × 600dpi**] / [**400 × 400dpi Ultra**] / [**300 × 300dpi**] / [**200 × 400dpi Super**] / [**200 × 200dpi Fine**] / [**200 × 100dpi Normal**])

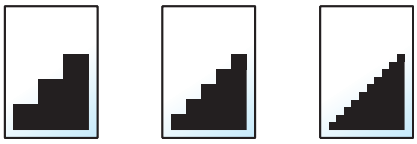

NOTE

The larger the number, the better the image resolution. However, better resolution also means larger file sizes and longer send times.

E-mail Subject/Body

Send > Advanced Setup > Custom Box > Functions

Adds subject and body when sending a document.

Select [**Subject**] / [**Body**] to enter the E-mail subject/body.

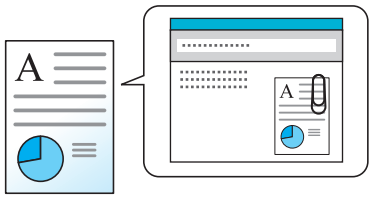

NOTE

- The subject can include up to 60 characters, and the body can include up to 500 characters.
- Select [**Body 1**], [**Body 2**], or [**Body 3**] to enter stored text for the body text. For details on registering templates, refer to the following:

E-mail Subject/Body (page 8-20)

Send and Print

Send > Advanced Setup

Prints a copy of the document being sent.

(**Value**: [**Off**] / [**On**])

Send and Store

Send > Advanced Setup

Stores a copy of the document being sent in a Custom Box.

(**Value**: [**Off**] / [**On**])

NOTE

- When [**On**] is selected, select the Custom Box in which the copy is to be stored.
  If a password entry screen for the Custom Box appears, enter the password.
- You can view information on the selected Custom Box by selecting [**Detail**].

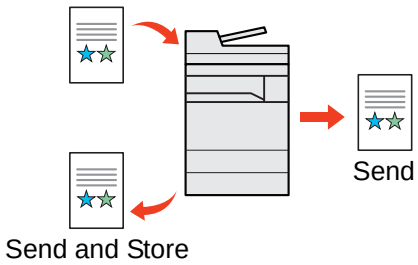

FTP Encrypted TX



Encrypts images when sending via FTP.

Encryption secures the document transmission.

(**Value**: [**Off**] / [**On**])

NOTE

Click [**Security Settings**], and then [**Network Security**] in the Command Center RX. Be sure that "SSL" of Secure Protocol Settings is "On" and one or more effective encryption are selected in Client side settings.

Command Center RX User Guide

File Size Confirmation



Checks the file size before sending the original. To change the file size, change the settings of each function. When you select [**Recalculate**], the file size is recalculated.

(**Value**: [**Off**] / [**On**])

Delete after Printed



Automatically deletes a document from the box once printing is complete.

(**Value**: [**Off**] / [**On**])

Delete after Transmitted



Automatically deletes a document from the box once transmission is complete.

(**Value**: [**Off**] / [**On**])

Storing Size

Custom Box > Functions USB Memory > Functions

Select size of image to be stored.

Select [**Standard Sizes 1**], [**Standard Sizes 2**], or [**Others**] to select the storing size.

Item	Value	Description
Standard Sizes 1	Metric models: Same as Original Size, A3, A4, A5, A6, B4, B5, B6, Folio, 216×340 mm Inch models: Same as Original Size, Ledger, Letter, Legal, Statement, 11×15", Oficio II	Select from Same as Original Size or Standard Size.
Standard Sizes 2	Metric models: Ledger, Letter, Legal, Statement, 11×15", Oficio II, 8K, 16K Inch models: A3, A4, A5, A6, B4, B5, B6, Folio, 8K, 16K, 216×340 mm	Select from standard sizes except Standard Sizes 1.
Others	Hagaki (Cardstock), Oufuku hagaki (Return postcard)	Select from Hagaki (Cardstock).

Relationship between Original Size, Storing Size, and Zoom

Original Size, Storing Size, and Zoom are related to each other. For details, see the table below.

Original Size and the size you wish to store as are	the same	different
Original Size (page 6-18)	Specify as necessary.	Specify as necessary.
Storing Size	Select [**Same as Original**].	Select the desired size.
Zoom (page 6-41)	Select [**100%**] (or [**Auto**]).	Select [**Auto**].

NOTE

When you select Storing Size that is different from Original Size, and select the Zoom [100%], you can store the image as the actual size (No Zoom).

Long Original

Send > Advanced Setup USB Memory > Functions

Reads long-sized original documents using a document processor. This function requires the optional document processor.

(**Value**: [**Off**] / [**On**])

NOTE

- Long originals are sent in black and white.
- Only a single side of a long original can be scanned.
- Originals of up to 1,900 mm / 74.8"*1 long can be scanned.
- This cannot be set when Bates Stamp is set.

*1 1,600 mm/63" if fax functions are used.

Encrypted PDF Password

USB Memory | Functions

Enter the preassigned password to print the PDF data.

Enter the Password, and select [**OK**].

NOTE

For details on entering the password, refer to the following:

Character Entry Method (page 11-10)

JPEG/TIFF Print

USB Memory | Functions

Select the image size when printing JPEG or TIFF files.

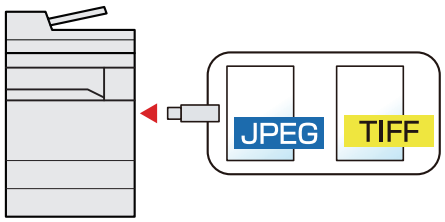

Item	Description
Paper Size	Fits the image size to the selected paper size.
Image Resolution	Prints at resolution of the actual image.
Print Resolution	Fits the image size to the print resolution.

XPS Fit to Page

USB Memory | Functions

Reduces or enlarges the image size to fit to the selected paper size when printing XPS file.

(**Value**: [**Off**] / [**On**])

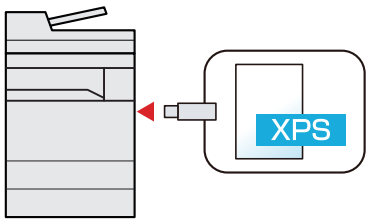

7 Status/Job Cancel

This chapter explains the following topics:

- Checking Job Status 7-2
  - Details of the Status Screens 7-3
  - Checking Detailed Information of Jobs 7-8
- Checking Job History 7-9
  - Checking the Detailed Information of Histories 7-10
  - Sending the Log History 7-10
- Job Operation 7-11
  - Pause and Resumption of Jobs 7-11
  - Canceling of Jobs 7-11
  - Priority Override for Waiting Jobs 7-11
  - Reordering Print Jobs 7-12
- Device/Communication 7-13
- Checking the Remaining Amount of Toner and Paper (Paper/Supplies) 7-14

Checking Job Status

Check the status of jobs being processed or waiting to be printed.

Available Status Screens

The processing and waiting statuses of jobs are displayed as a list on the touch panel in four different screens - Printing Jobs, Sending Jobs, Storing Jobs, and Scheduled Jobs.

The following job statuses are available.

Status Display	Job status to be displayed
Print Job Status	• Copy • Printer • FAX reception • E-mail reception • Printing from Document Box • Printing data from removable memory • Application • Job Report/List
Send Job Status	• FAX transmission • i-FAX transmission • E-mail • Folder transmission • Application • Multiple destination • Sending Job FAX using Delayed transmission
Store Job Status	• Scan • FAX • i-FAX • Printer • Join Box Document • Copy Box Document
Scheduled Job	• Sending Job FAX using Delayed transmission

Displaying Status Screens

1 Display the screen.

Select the [**Status/Job Cancel**] key.

2 Select the job you want to check.

Select either of [**Print Job Status**], [**Send Job Status**], [**Store Job Status**] or [**Scheduled Job**] to check the status.

- Print Job Status Screen (page 7-3)
- Send Job Status screen (page 7-5)
- Store Job Status screen (page 7-6)
- Scheduled Job Status Screen (page 7-7)

Details of the Status Screens

NOTE

- You can show the job statuses of all users, or only the statuses of your own jobs.
  Display Status/Log (page 8-29)
- This setting can also be changed from Command Center RX.
  Command Center RX User Guide

Print Job Status Screen

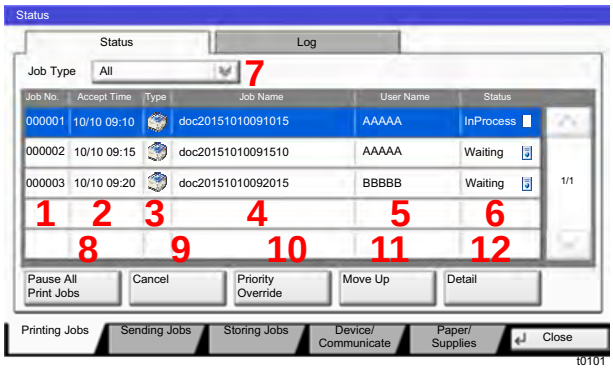

No.	Item	Description
1	Job No.	Acceptance No. of job
2	Accepted Time	Accepted Time of job
3	Type	Icons that indicate the job type Copy job Printer job Job from Document Box FAX reception i-FAX reception E-mail reception Data from removable memory Application Report/List
4	Job Name	Job Name or file name
5	User Name	User Name for the executed job
6	Status	Status of job InProcess: The status before starting to print. Printing: Printing Waiting: Print Waiting Pause: Pausing print job or error Canceling: Canceling the job
7	[⩛] of "Job Type"	Only selected type of jobs is displayed.

No.	Item	Description
8	[**Pause All Print Jobs**]	Pauses all the printing jobs. By pressing this key again, the printing jobs will be resumed.
9	[**Cancel**]	Select the job you want to cancel from the list, and press this key.
10	[**Priority Override**]	Select the job to be overridden, and press this key. ➡ Priority Override for Waiting Jobs (page 7-11)
11	[**Move Up**]	In the list, select the job that you want to move up the job queue and press this key. ➡ Reordering Print Jobs (page 7-12)
12	[**Detail**]	Select the job whose detailed information you want to display from the list, and press this key. ➡ Checking Detailed Information of Jobs (page 7-8) You can select [**Change**] in “Copies” in the detailed information screen to change the number of copies that are printed.

NOTE

The job name and user name can be changed to other information if needed.

➡ Customize Status Display (page 8-30)

Send Job Status screen

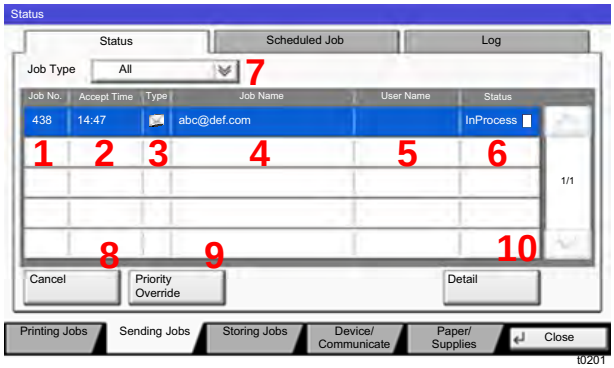

No.	Item	Description
1	Job No.	Acceptance No. of job
2	Accepted Time	Accepted Time of job
3	Type	Icons that indicate the job type Sending Job FAX Sending Job i-FAX Sending Job E-mail Sending Job Folder Sending Job Application Multi Sending
4	Destination	Destination (Either destination name, FAX number, E-mail address, or server name)
5	User Name	User Name for the executed job
6	Status	Status of job InProcess: The status before starting sending such as during scanning originals Sending: Sending Waiting: Waiting Sending Canceling: Canceling the job Pause: Pausing the job
7	[⩒] of "Job Type"	Only selected type of jobs is displayed.
8	[**Cancel**]	Select the job you want to cancel from the list, and press this key.
9	[**Priority Override**]	Select the job to be overridden, and press this key. Only displayed when the optional fax kit is installed.
10	[**Detail**]	Select the job whose detailed information you want to display from the list, and press this key. ➡ Checking Detailed Information of Jobs (page 7-8)

NOTE

The address and user name can be changed to other information if needed.

➡ Customize Status Display (page 8-30)

Store Job Status screen

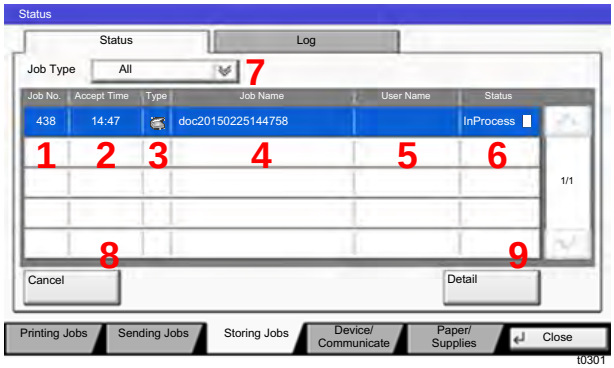

No.	Item	Description
1	Job No.	Acceptance No. of job
2	Accepted Time	Accepted Time of job
3	Type	Icons that indicate the job type Storing Job Scan Storing Job Printer Storing Job FAX Storing Job i-FAX Join Box Document Copy Box Document
4	Job Name	Job name or file name is displayed.
5	User Name	User Name for the executed job
6	Status	Status of job InProcess: The status before starting to save such as during scanning originals Storing: Storing Data Canceling: Canceling the job Pause: Pausing the job
7	[⩒] of "Job Type"	Only selected type of jobs is displayed.
8	[**Cancel**]	Select the job you want to cancel from the list, and press this key.
9	[**Detail**]	Select the job whose detailed information you want to display from the list, and press this key. Checking Detailed Information of Jobs (page 7-8)

NOTE

The job name and user name can be changed to other information if needed.

Customize Status Display (page 8-30)

Scheduled Job Status Screen

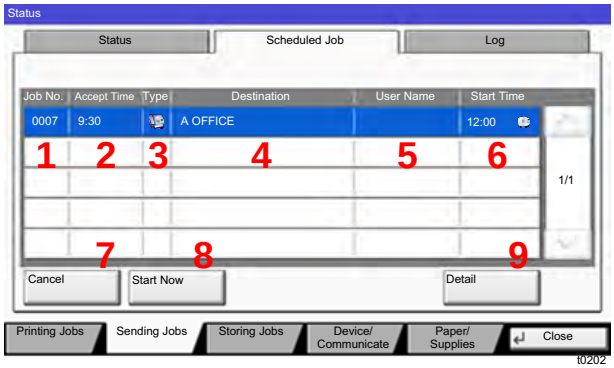

No.	Item	Description
1	Job No.	Acceptance No. of job
2	Accepted Time	Accepted Time of job
3	Type	Icons that indicate the job type Scheduling Job FAX
4	Destination	Destination (Either destination name, FAX number, or No. of broadcast items)
5	User Name	User Name for the executed job
6	Start Time	Time to start the scheduled job
7	[**Cancel**]	Select the job you want to cancel from the list, and press this key.
8	[**Start Now**]	Select the job you want to send immediately from the list, and press this key.
9	[**Detail**]	Select the job whose detailed information you want to display from the list, and press this key. Checking Detailed Information of Jobs (page 7-8)

Checking Detailed Information of Jobs

1 Display the screen.

Details of the Status Screens (page 7-3)

2 Check the information.

1 Select [**Detail**] for the job for which you wish to display detailed information.

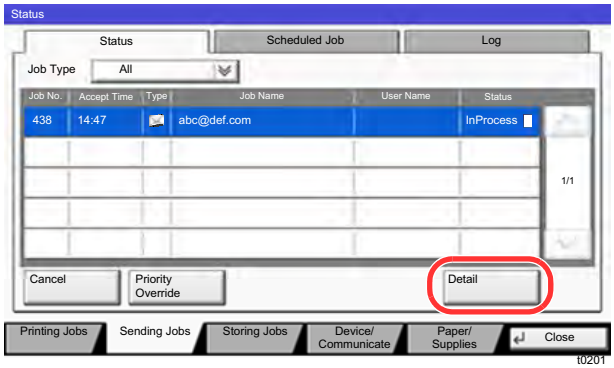

Detailed information of the selected job is displayed.

Use [∨] or [∧] to see the next or previous page of information.

In Sending Jobs, you can check the destination by selecting [**Detail**] in "Destination" or "Status/Destination".

"Status/Destination" is displayed when address is selected. Select [**Detail**] to display the list. Select [∨] or [∧], select a destination and select [**Detail**]. Information on the selected job is displayed for checking.

2 To exit from the detailed information, select [**Close**].

Checking Job History

NOTE

- Job history is also available by Command Center RX or KYOCERA Net Viewer from the computer.
  - **Command Center RX User Guide**
  - **KYOCERA Net Viewer User Guide**
- You can show the job log of all users, or only your own job log.
  - Display Status/Log (page 8-29)
- This setting can also be changed from Command Center RX.
  - **Command Center RX User Guide**

Available Job History Screens

The job histories are displayed separately in four screens - Printing Jobs, Sending Jobs, Storing Jobs, and FAX Jobs. The following job histories are available.

Screen	Job histories to be displayed
Print Job Log	• Copy • Printer • FAX reception • i-FAX reception • E-mail reception • Printing from Document Box • Job Report/List • Printing data from removable memory • Application
Send Job Log	• FAX • i-FAX • E-mail • Folder • Application • Multiple destination
Store Job Log	• Scan • FAX • i-FAX • Printer • Join Box Document • Copy Box Document
FAX Job Log	**FAX Operation Guide**

Displaying Job History Screen

1 **Display the screen.**

Select the [**Status/Job Cancel**] key.

2 **Select the job to check details.**

Select the [**Log**] tab, and select the job to check details from the list.

Checking the Detailed Information of Histories

1 **Display the screen.**

Displaying Job History Screen (page 7-10)

2 **Check the information.**

1 Select the job to check details from the list, and select [**Detail**].

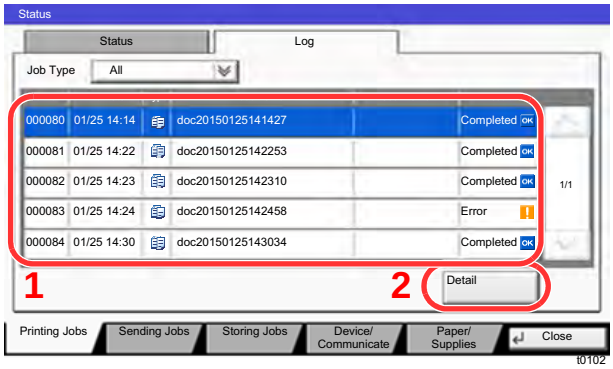

Detailed information of the selected job is displayed.

NOTE

To check the information of the next/previous page, select [∨] or [∧].

2 To exit from the detailed information, select [**Close**].

Sending the Log History

You can send the log history by E-mail. You can either send it manually as needed or have it sent automatically whenever a set number of jobs is reached.

Send Log History (page 8-45)

Job Operation

Pause and Resumption of Jobs

Pause/resume all printing jobs in printing/waiting.

1 **Display the screen.**

Select the [**Status/Job Cancel**] key.

2 **Select [Pause All Print Jobs] on the printing jobs status screen.**

Printing is paused.

When resuming the printing of jobs that have been paused, select [**Resume All Print Jobs**].

Canceling of Jobs

A job in printing/waiting status can be canceled.

1 **Display the screen.**

Select the [**Status/Job Cancel**] key.

2 **Select the job to be canceled from the list, and select [Cancel].**

3 **Select [Yes] in the confirmation screen.**

Priority Override for Waiting Jobs

Priority Override function suspends the current job and prints the job in waiting first.

1 **Display the screen.**

Select the [**Status/Job Cancel**] key.

2 **Select [Printing Jobs].**

3 **Select the job to be given priority, and select [Priority Override].**

4 **Select [Yes] in the confirmation screen.**

The current job in printing is suspended, and the job for override.

Reordering Print Jobs

This function allows you to select a queued print job and raise its output priority.

1 Display the screen.

Select the [**Status/Job Cancel**] key.

2 Select [Printing Jobs].

3 Select the job to be assigned a higher priority and select [Move Up].

The priority of the selected job is increased by 1.

To further raise the job's priority, select [**Move Up**] again. Each time you select [**Move Up**], the priority increases by 1.

Device/Communication

Configure the devices/lines installed or connected to this machine or check their status.

1 Display the screen.

1 Select the [**Status/Job Cancel**] key.

2 Select [**Device/Communicate**].

The screen to check the status or configure the devices is displayed.

2 Check the status.

The items you can check are described below.

"Scanner"

The status of an original scanning or the error information (paper jam, opened cover, etc.) is displayed.

"Printer"

Error information such as paper jam, out of toner, or out of paper, and status such as waiting or printing are displayed.

"FAX Port 1", "FAX Port 2", "i-FAX"

- The information such as sending/receiving and dialing is displayed.

  FAX Operation Guide

"Removable Memory (USB Memory)"

- The usage, capacity and free space of the external media connected to this machine are displayed.
- Select [**Format**] to format external media.

  IMPORTANT
  When [Format] is selected, all data in the external media is erased.

- Select [**Remove**] to safely remove the external media.

"Hard Disk"

The status of the hard disk is displayed.

"Connectivity"

The network connection status and the status of the optional keyboard are displayed.

Checking the Remaining Amount of Toner and Paper (Paper/Supplies)

Check the remaining amount of toner, and paper on the touch panel.

1 Display the screen.

1. Select the [**Status/Job Cancel**] key.
2. Select [**Paper/Supplies**].

2 Check the status.

The items you can check are described below.

"Toner Information"

The amount of toner remaining is shown in levels. And you can check the status of waste toner box.

"Paper Status"

You can check the size, orientation, type, and remaining amount of paper in each paper source. The amount of paper remaining is shown in levels.

"Others"

You can check the status of staples and punch waste box.

8 Setup and Registration (System Menu)

This chapter explains the following topics:

System Menu 8-2
Operation Method 8-2
System Menu Settings 8-4
Counter 8-7
Cassette/MP Tray Settings 8-7
Common Settings 8-10
Home 8-32
Copy 8-33
Send 8-34
Document Box/Removable Memory 8-39
FAX 8-40
Printer 8-40
Report 8-43
System/Network 8-48
Edit Destination 8-67
User Login/Job Accounting 8-68
User Property 8-68
Date/Timer/Energy Saver 8-68
Adjustment/Maintenance 8-72
Internet 8-75
Application 8-75

System Menu

Configure settings related to overall machine operation.

Operation Method

1 Display the screen.

Select the [**System Menu/Counter**] key.

2 Select a function.

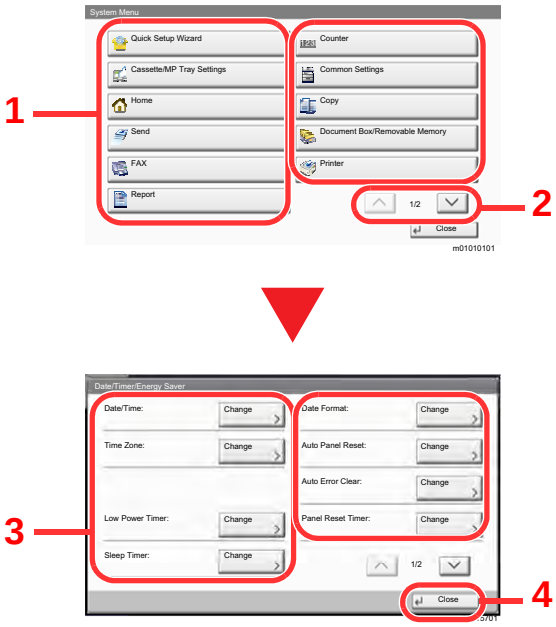

1 Displays the System Menu items.

2 Scrolls up and down when the list of values cannot be displayed in its entirety on a single screen.

3 Displays setting items
Select the key of a function to display the setting screen.

4 Returns to the previous screen.

3 Configure the function.

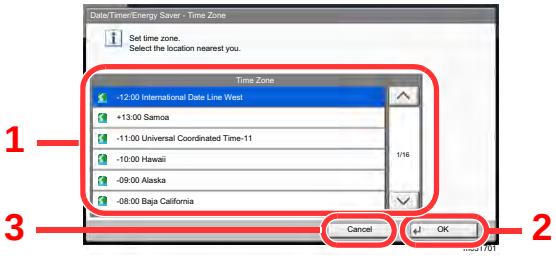

1 Enter a setting by selecting it.

2 Accepts the settings and exits.

3 Returns to the previous screen without making any changes.

NOTE

- In order to change settings that require administer privileges, you must log in with administrator privileges.
  The factory default login user name and login password are set as shown below.

Model Name	Login User Name	Login Password
2552ci	2500	2500
3252ci	3200	3200
3552ci	3500	3500
4052ci	4000	4000
5052ci	5000	5000
6052ci	6000	6000

- If function default settings have been changed, the [**Reset**] key can be selected in each function screen to immediately change the settings.

Refer to System Menu Settings on the following page and configure as needed.

System Menu Settings

This section explains the functions that can be configured in System Menu. To configure the settings, select the item in System Menu and select the setting item. For details on each function, see the table below.

Item	Description	Reference Page
Quick Setup Wizard	The Quick Setup Wizard configures Fax, Network and Energy Saver settings.	page 2-42
Counter	Check the number of sheets printed and scanned.	page 2-58
Cassette/MP Tray Settings	Select paper size and media type for Cassettes and multi purpose tray.	page 8-7
Cassette 1 (to 5)	Select type of paper in Cassette 1 (to 5).	page 8-7
MP Tray Setting	Select type of paper in multi purpose tray.	page 8-8
Common Settings	Configure overall machine operation.	page 8-10
Language	Set the language to use for the touch panel display.	page 8-10
Default Screen	Select the screen appearing right after start-up (default screen).	page 8-10
Sound	Set options for buzzer sound during the machine operations.	page 8-10
Keyboard Layout	Change the layout of the touch panel keyboard used to enter characters.	page 8-11
Original/Paper Settings	Configure settings for originals and paper.	page 8-11
Measurement	Select inch or metric for the unit for paper dimensions.	page 8-15
Error Handling	Select whether to cancel or continue the job when error has occurred.	page 8-16
Paper Output	Select the output tray respectively for copy jobs, print jobs from Document Box, computers, and FAX RX data.	page 8-17
Orientation Confirmation	Check the orientation of original.	page 8-18
Color Toner Empty Action	Select whether printing is prohibited or the Print in Black and White setting is used for printing once the color toner runs out.	page 8-18
Function Defaults	Defaults are the values automatically set after the warm-up is completed or the [**Reset**] key is selected. Set the defaults for available settings such as copying and sending. Setting the frequently-used values as defaults makes subsequent jobs easier.	page 8-18
Optional Keyboard Type	Select the type of optional keyboard that you want to use.	page 8-21
System Stamp	Configure settings for header, footer, and stamp.	page 8-22
Manual Staple	Select whether to use Manual Staple.	page 8-28
Offset Documents by Job	Select whether to offset documents by Job.	page 8-28
Low Toner Alert Level	Set the amount of remaining toner to notify the administrator when to order a toner when the toner is running low.	page 8-29
Toner Waste Full Alert	Set the capacity of the waste toner box for which you require notification to be sent that the waste toner box is going to be full.	page 8-29
Offset One Page Documents	Set whether one-page documents are sorted.	page 8-29

Item		Description	Reference Page
	Display Status/Log	Set the display method of the Status/Log.	page 8-29
	Message Banner Print	Set whether the confirmation screen appears before each sheet is printed when printing multiple banner sheets.	page 8-30
	Customize Status Display	Select the item that appears for the printing jobs status.	page 8-30
	Message Board Settings	Configure settings for message board.	page 8-31
	Remote Printing	Configure settings for remote printing.	page 8-31
	Numeric Keypad Settings	Select whether or not to display the numeric keypad.	page 8-32
	Prevent Light Reflection	Prevent light reflection when using the Erase Shadowed Areas feature.	page 8-32
	Function Key Assignment	Assign a function to each function key.	page 8-32
	Show Power Off Message	Select whether the confirmation message is displayed, when Power Switch is pressed.	page 8-32
Home		Configure settings for Home screen.	page 8-32
Copy		Configures settings for copying functions.	page 8-33
Send		Configures settings for sending functions.	page 8-34
Document Box/Removable Memory		Configures settings related to the Custom Box, Job Box, Sub Address Box and Polling Box. For details on FAX Box and Polling Box, refer to the following: ➔ **FAX Operation Guide**	page 8-39
FAX		Configures settings for fax functions. ➔ **FAX Operation Guide**	—
Printer		Printing from computers, settings are generally made on the application software screen. However, the following settings are available for configuring the defaults to customize the machine.	page 8-40
Report		Print reports to check the machine settings, status, and history. Settings for printing reports can also be configured.	page 8-43
	Print Report	Configure settings for printing reports and histories.	page 8-43
	Admin Report Settings		Refer to the **FAX Operation Guide**.
	Result Report Setting		page 8-44
	Sending Log History		page 8-45
	Login History Settings		page 8-45
	Device Log History Settings		page 8-46
	Secure Comm. Error Log		page 8-47

Item	Description	Reference Page
System/Network	Configure machine system settings.	page 8-48
Network	Configures network settings.	page 8-48
Optional Network	Configure settings for the optional Network Interface Kit.	page 8-60
Primary Network (Client)	Select the network interface to be used for the send function that this machine functions as a client, the network authentication and connecting to external address book.	page 8-62
Security Level	The Security Level setting is primarily a menu option used by service personnel for maintenance work. There is no need for customers to use this menu.	—
Interface Block Setting	This allows you to protect this machine by blocking the interface with external devices such as USB hosts or optional interfaces.	page 8-63
Data Security	Configure settings for data stored in the SSD, hard disk, and machine's memory.	page 8-64
Optional Function	You can use the optional applications installed on this machine.	page 8-66
Bluetooth Settings	Set the Bluetooth keyboard.	page 8-66
Restart Entire Device	Restart the CPU without turning the power switch off. Use this to deal with any unstable operation by the machine. (Same as the computer restart.)	page 8-66
NFC	Set NFC (Near Field Communication).	page 8-66
Edit Destination	Configures Address Book and One Touch Key settings. Address Book: ➨ Adding a Destination (Address Book) (page 3-30) One Touch Key: ➨ Adding a Destination on One Touch Key (One Touch Key) (page 3-37)	page 8-67
User Login/Job Accounting	Configures settings related to machine management. User Login: ➨ Overview of User Login Administration (page 9-2) Job Accounting: ➨ Overview of Job Accounting (page 9-34)	—
User Property	Allows you to view information about logged in users and edit some of that information.	page 8-68
Date/Timer/Energy Saver	Configures settings related to the date and time.	page 8-68
Adjustment/Maintenance	Adjust printing quality and conduct machine maintenance.	page 8-72
Internet	Configure settings related to the internet.	page 8-75
Application	Configure settings for Application.	page 8-75

Counter

[**System Menu/Counter**] key > [**Counter**]

Check the number of sheets printed and scanned.

Cassette/MP Tray Settings

Select paper size and media type for Cassettes and multi purpose tray.

Cassette 1 (to 5)

[**System Menu/Counter**] key > [**Cassette/MP Tray Settings**] > [**Cassette 1 (to 5)**]

Select paper size and media type for Cassettes 1 to 5.

Selection Item		Selectable Size/Type
Paper Size[*1]	**Auto**	Paper size is automatically detected and selected. **Values: Metric, Inch**
	Standard Sizes 1	Available options are as follows: **Values** **Metric models:** **A3**[*2*3], **A4-R**[*3], **A4**[*3], **A5-R**[*3], **A5**[*3], **A6-R**[*3], **B4**[*2*3], **B5-R**[*3], **B5**[*3], **B6-R**[*3], **Folio**[*3], **216×340 mm**[*4] **Inch models:** **Ledger**[*2*3], **Letter-R**[*3], **Letter**[*3], **Legal**[*3], **Statement-R**[*3], **Executive, 12×18"**[*2*3], **Oficio II**
	Standard Sizes 2	Select from standard sizes except Standard Sizes 1. **Values** **Metric models:** **Ledger**[*2*3], **Letter-R**[*3], **Letter**[*3], **Legal**[*3], **Statement-R**[*3], **Executive, 12×18"**[*2*3], **Oficio II, 8K**[*2], **16K-R, 16K** **Inch models:** **A3**[*2*3], **A4-R**[*3], **A4**[*3], **A5-R**[*3], **A5**[*3], **A6-R**[*3], **B4**[*2*3], **B5-R**[*3], **B5**[*3], **B6-R**[*3], **Folio**[*3], **8K**[*2], **16K-R, 16K, 216×340 mm**[*4]
	Others	Select from special standard sizes and custom sizes. **Values: ISO B5, Envelope #10, Envelope #9, Envelope #6, Envelope Monarch, Envelope DL, Envelope C5, Envelope C4**[*2], **Hagaki (Cardstock), Oufuku hagaki (Return postcard), Youkei 4, Youkei 2**

Selection Item		Selectable Size/Type
Paper Size	**Size Entry**	Enter the size not included in the standard size. **Values** **Cassette 1** **Metric** **X: 148 to 356 mm (in 1mm increments)** **Y: 98 to 297 mm (in 1mm increments)** **Inch** **X: 5.83 to 14.02" (in 0.01" increments)** **Y: 3.86 to 11.69" (in 0.01" increments)** **Cassette 2 to 4** **Metric** **X: 148 to 452 mm (in 1mm increments)** **Y: 98 to 320 mm (in 1mm increments)** **Inch** **X: 5.83 to 18.00" (in 0.01" increments)** **Y: 3.86 to 12.60" (in 0.01" increments)**
Media Type*5		Select the media type. **Values: Plain (60 - 105 g/m^2), Rough, Vellum (60 - 105 g/m^2), Recycled, Preprinted*6, Bond, Cardstock*7, Color, Prepunched*6, Letterhead*6, Envelope*7, Thick (106 - 163 g/m^2), High Quality, Custom 1 - 8**

*1 When the optional Large Capacity Feeder (1,500-sheet×2) or Side Feeder (3,000-sheet) is used, paper size does not appear.
*2 Not displayed in Cassette 1.
*3 Paper size is automatically detected in the cassette.
*4 This paper cannot be used in Cassette 1.
*5 To change to a media type other than "Plain".
Media Type Setting (page 8-15)
When a paper weight that cannot be loaded in the cassette is set for a media type, that media type does not appear.
*6 To print on preprinted or prepunched paper or on letterhead.
Special Paper Action (page 8-14)
*7 Not displayed in the optional Large Capacity Feeder (1,500-sheet×2) or Side Feeder (3,000-sheet).

MP Tray Setting

[**System Menu/Counter**] key > [**Cassette/MP Tray Settings**] > [**MP Tray Setting**]

Select paper size and media type for the multi purpose tray.

Item		Description
Paper Size	**Auto**	Paper size is automatically detected and selected. **Values: Metric, Inch**
	Standard Sizes 1	Available options are as follows: **Values** **Metric models:** **A3*1, A4-R*1, A4*1, A5-R*1, A5, A6-R*1, B4*1, B5-R*1, B5*1, B6-R*1, Folio, 216×340 mm, SRA3*1** **Inch models:** **Ledger*1, Letter-R*1, Letter*1, Legal*1, Statement-R*1, Executive, 12×18"*1, Oficio II**

Item		Description
Paper Size	**Standard Sizes 2**	Select from standard sizes except Standard Sizes 1. **Values** **Metric models:** **Ledger[*1], Letter-R[*1], Letter[*1], Legal[*1], Statement-R[*1], Executive, 12×18"[*1], Oficio II, 8K, 16K-R, 16K** **Inch models:** **A3[*1], A4-R[*1], A4[*1], A5-R[*1], A5, A6-R[*1], B4[*1], B5-R[*1], B5[*1], B6-R[*1], Folio[*1], 8K, 16K-R, 16K, 216×340 mm, SRA3[*1]**
	Others	Select from special standard sizes and custom sizes. **Values: ISO B5, Envelope #10, Envelope #9, Envelope #6, Envelope Monarch, Envelope DL, Envelope C5, Envelope C4, Hagaki (Cardstock)[*1], Oufuku hagaki (Return postcard), Youkei 4, Youkei 2**
	Size Entry	Enter the size not included in the standard size. **Values** **Metric** **X: 148 to 457 mm (in 1mm increments)** **Y: 98 to 320 mm (in 1mm increments)** **Inch** **X: 5.83 to 18.00" (in 0.01" increments)** **Y: 3.86 to 12.60" (in 0.01" increments)** **X=Length, Y=Width** Vertical Horizontal 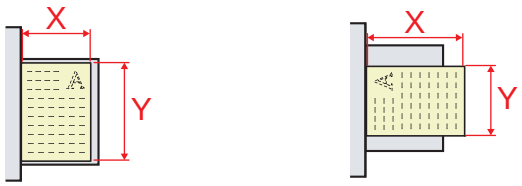
Media Type[*2]		Select the media type. **Values: Plain (60 to 105 g/m^2), Transparency, Rough, Vellum (52 to 105 g/m^2), Labels, Recycled, Preprinted[*3], Bond, Cardstock, Color, Prepunched[*3], Letterhead[*3], Envelope, Thick (106 to 300 g/m^2), Coated, High Quality, Index Tab Dividers, Custom 1-8**

*1 Paper size is automatically detected in the Multi Purpose Tray.
*2 To change to a media type other than "Plain".
Media Type Setting (page 8-15)
*3 To print on preprinted or prepunched paper or on letterhead.
Special Paper Action (page 8-14)

NOTE

If the optional FAX Kit is installed, the available media types for printing received faxes are as shown below.

Plain, Rough, Vellum, Labels, Recycled, Bond, Cardstock, Color, Envelope, Thick, Coated, High Quality and Custom1-8

Common Settings

Configures overall machine operation.

Language

[**System Menu/Counter**] key > [**Common Settings**] > [**Language**]

Item	Description
Language	Set the language to use for the touch panel display.

Default Screen

[**System Menu/Counter**] key > [**Common Settings**] > [**Default Screen**]

Item	Description
Default Screen	Select the screen appearing right after start-up (default screen). **Value: Home, Copy, Send, FAX*1, Status, Custom Box, Job Box, Removable Memory, FAX Box*1, Program, Home (Accessibility), Accessibility Copy, Accessibility Send, Accessibility FAX*1, Internet Browser*2, Application Name*3**

*1 Displayed only when the optional FAX Kit is installed.
*2 Configure necessary settings for Internet Browser.
Internet (page 8-75)
*3 The running application will be displayed.
Application (page 5-14)

Sound

[**System Menu/Counter**] key > [**Common Settings**] > [**Sound**]

Item		Description
Buzzer		Set options for buzzer sound during the machine operations.
	Volume	Set the buzzer volume level. **Value: 0 (Mute), 1 (Minimum), 2, 3 (Medium), 4, 5 (Maximum)**
	Key Confirmation	Emit a sound when the operation panel and touch panel keys are selected. **Value: Off, On**
	Job Finish	Emit a sound when a print job is normally completed. **Value: Off, On, FAX Reception Only*1**
	Ready	Emit a sound when the warm-up is completed. **Value: Off, On**
	Warning	Emit a sound when errors occur. **Value: Off, On**
	Optional Keyboard	Emit a sound to confirm keypresses with a sound. **Value: Off, On**
FAX Speaker Volume*1		**FAX Operation Guide**
FAX Monitor Volume*1		**FAX Operation Guide**

*1 Displayed only when the optional FAX Kit is installed.

Keyboard Layout

[**System Menu/Counter**] key > [**Common Settings**] > [**Keyboard Layout**]

Item	Description
Keyboard Layout	Change the layout of the touch panel keyboard used to enter characters. **Value: QWERTY, QWERTZ, AZERTY**

Original / Paper Settings

[**System Menu/Counter**] key > [**Common Settings**] > [**Original / Paper Settings**]

Configure settings for originals and paper.

Item	Description
Custom Original Size	Set up frequently-used custom original size. The custom size option is displayed on the screen to select original size. To register a custom original size, select [**On**] and enter the desired size. Up to four custom original sizes can be added. **Value** **Metric** **X: 50 to 432 mm (in 1 mm increments)** **Y: 50 to 297 mm (in 1 mm increments)** **Inch** **X: 2.00 to 17.00" (in 0.01" increments)** **Y: 2.00 to 11.69" (in 0.01" increments)** **X=Length, Y=Width** Vertical 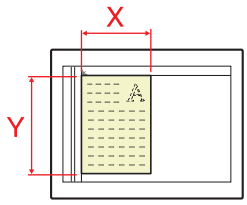 Horizontal 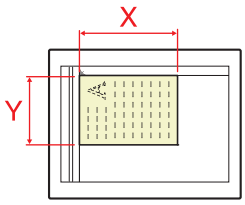

Item	Description
Custom Paper Size	Set up frequently-used custom paper size. The custom size option is displayed on the screen to select paper size in the multi purpose tray. To register a custom paper size, press [**On**] and enter the desired size. Up to four custom paper sizes can be added. **Value** **Metric** **X: 148 to 457 mm (in 1 mm increments)** **Y: 98 to 320 mm (in 1 mm increments)** **Inch** **X: 5.83 to 18.00" (in 0.01" increments)** **Y: 3.86 to 12.60" (in 0.01" increments)** **X=Length, Y=Width** Vertical 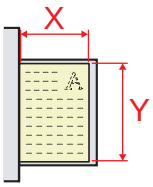 Horizontal 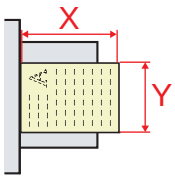 **Media Type: Plain, Transparency, Rough, Vellum, Labels, Recycled, Preprinted, Bond, Cardstock, Color, Prepunched, Letterhead, Thick, Envelope, Coated, High Quality, Index Tab Dividers, Custom 1-8**
Media Type Setting	Select weight for each media type. For Custom 1-8, settings for duplex printing and media type name can be changed. Media Type Setting (page 8-15)
Default Paper Source	Select the default paper source from Cassette 1-5 and multi purpose tray. **Value: Cassette 1 (to 5), Multi Purpose Tray** **NOTE** [**Cassette 3**] to [**Cassette 5**] are displayed when the following optional paper feeder is installed. [**Cassette 3**]: When a paper feeder (500-sheet×2) or large capacity paper feeder (1,500-sheet×2) is installed. [**Cassette 4**]: When a paper feeder (500-sheet×2) or large capacity paper feeder (1,500-sheet×2) is installed. [**Cassette 5**]: When a side feeder (3,000-sheet) is installed.
Auto Switch	When the optional large capacity feeder is selected, the cassette can be switched to another large capacity feeder depending on your usage. **Value: Off, On**

Item			Description
Auto Detect Original Size			Select whether to automatically detect originals of special or non-standard size. Select [**Metric**] when automatically detecting the originals in centimeter sizes. Select [**Inch**] when detecting the originals in inch sizes.
	Metric	**A6/Hagaki**	As A6 and Hagaki (Cardstock) are similar in size, select either one of them for automatic detection. **Value: A6, Hagaki** **NOTE** If [**Hagaki**] is set, only the originals placed on the platen are detected.
		Folio	Select whether to enable automatic detection of Folio. **Value: Off, On**
		11×15"	Select whether to enable automatic detection of 11×15" size. **Value: Off, On**
	Inch	**Legal/ Oficio II/ 216×340 mm**	Set the original sizes for the device to detect automatically. **Value: Legal, Oficio II, 216×340 mm**
Media for Auto (Color)			Select a default media type for auto paper selection when [**Auto**] is selected of Paper Selection. If [**Plain**] is selected, the paper source with plain paper loaded in the specific size is selected. Select [**All Media Types**] for the paper source with any kind of paper loaded in the specific size. **Value: All Media Types, Plain, Transparency, Rough, Vellum, Labels, Recycled, Preprinted, Bond, Cardstock, Color, Prepunched, Letterhead, Envelope, Thick, Coated, High Quality, Index Tab Dividers, Custom 1 to 8**
Media for Auto (B&W)			
Paper Source for Cover			Select the paper source in which the cover paper used for the Cover function is placed. **Value: Cassette 1 (to 5), Multi Purpose Tray** **NOTE** [**Cassette 3**] to [**Cassette 5**] are displayed when the following optional paper feeder is installed. [**Cassette 3**]: When a paper feeder (500-sheet×2) or large capacity paper feeder (1,500-sheet×2) is installed. [**Cassette 4**]: When a paper feeder (500-sheet×2) or large capacity paper feeder (1,500-sheet×2) is installed. [**Cassette 5**]: When a side feeder (3,000-sheet) is installed.

Item	Description
Special Paper Action	When printing on Prepunched, Preprint, and Letterhead, punch-holes might not be aligned or the print direction might be upside-down depending on how originals are set and the combination of copying functions. In such a case, select [**Adjust Print Direction**] to adjust the print direction. When paper orientation is not important, select [**Speed Priority**]. If [**Adjust Print Direction**] is selected, load paper according to the steps below. Example: copying on Letterhead 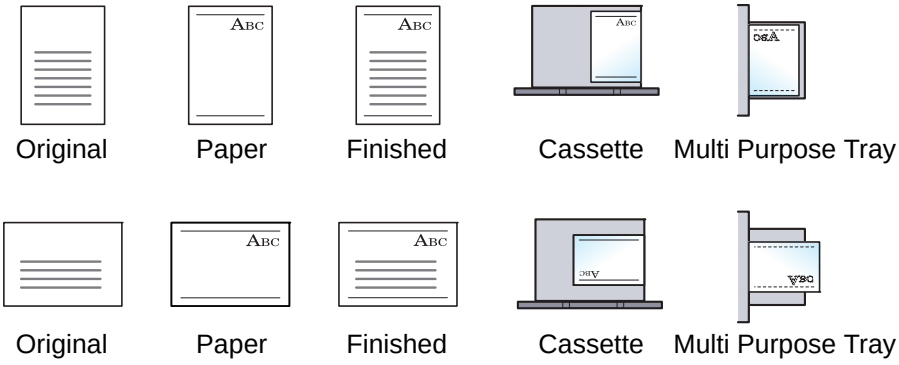 **Value: Adjust Print Direction, Speed Priority**
Separator Paper Source	Select the default paper source for separator sheets. **Value: Cassette 1 (to 5), Multi Purpose Tray** **NOTE** [**Cassette 3**] to [**Cassette 5**] are displayed when the following optional paper feeder is installed. [**Cassette 3**]: When a paper feeder (500-sheet×2) or large capacity paper feeder (1,500-sheet×2) is installed. [**Cassette 4**]: When a paper feeder (500-sheet×2) or large capacity paper feeder (1,500-sheet×2) is installed. [**Cassette 5**]: When a side feeder (3,000-sheet) is installed.
Show Paper Setup Message **Cassette 1 to 5** **Multi Purpose Tray**	Set whether to display the confirmation screen for the paper setting when a new paper is set for each cassette. **Value: Off, On** **NOTE** [**Cassette 3**] to [**Cassette 5**] are displayed when the following optional paper feeder is installed. [**Cassette 3**]: When a paper feeder (500-sheet×2) or large capacity paper feeder (1,500-sheet×2) is installed. [**Cassette 4**]: When a paper feeder (500-sheet×2) or large capacity paper feeder (1,500-sheet×2) is installed. [**Cassette 5**]: When a side feeder (3,000-sheet) is installed.

Media Type Setting

The following media type and paper weight combinations are available.

Paper Weight	Weight (g/m²)	Paper Weight	Weight (g/m²)
Light	52 g/m² to 59 g/m²	**Heavy 2*1**	136 g/m² to 163 g/m²
Normal 1	60 g/m² to 74 g/m²	**Heavy 3*1**	164 g/m² to 220 g/m²
Normal 2	75 g/m² to 90 g/m²	**Heavy 4*1**	221 g/m² to 256 g/m²
Normal 3	91 g/m² to 105 g/m²	**Heavy 5*1**	257 g/m² to 300 g/m²
Heavy 1*1	106 g/m² to 135 g/m²	**Extra Heavy*1**	Transparencies

*1 The processing speed will be slower than normal.

Each media type's default weight is indicated.

Media Type	Default	Media Type	Default
Plain	Normal 2	**Prepunched**	Normal 2
Rough	Normal 3	**Letterhead**	Normal 2
Vellum	Heavy 1	**Envelope**	Heavy 3
Labels	Heavy 2	**Thick**	Heavy 3
Recycled	Normal 2	**High Quality**	Normal 2
Preprinted	Normal 2	**Coated**	Heavy 1
Bond	Normal 3	**Index Tab Dividers**	Heavy 4
Cardstock	Heavy 4	**Custom 1 - 8**	Normal 2
Color	Normal 3		

For Custom 1-8, settings for duplex printing and media type name can be changed.

Item		Description
Duplex Print	**Prohibit**	Duplex printing allowed.
	Permit	Duplex printing not allowed.
Name		Change names for Custom 1-8. Names should be not more than 16 characters. Selecting media type at multi purpose tray, the name after change will be displayed. Character Entry Method (page 11-10)

Measurement

[**System Menu/Counter**] key > [**Common Settings**] > [**Measurement**]

Item	Description
Measurement	Select inch or metric for the unit for paper dimensions. **Value: mm, inch**

Error Handling

[**System Menu/Counter**] key > [**Common Settings**] > [**Error Handling**]

Select whether to cancel or continue the job when error has occurred.

Item	Description
Duplexing Error	Set what to do when duplex printing is not possible for the selected paper sizes and media types. **Value** **1-sided: Printed in 1-sided** **Display Error: Message to cancel printing is displayed.**
Finishing Error	Set alternative actions when finishing (Staple/Punch/Offset) is not available for the selected paper size or media type. **Value** **Ignore: The setting is ignored and the job is printed.** **Display Error: Message to cancel printing is displayed.**
No Staple Error	Set what to do when staples run out during printing. **Value** **Ignore: Printing continues without stapling.** **Display Error: Message to cancel printing is displayed.** **NOTE** Requires the optional Document Finisher.
Finished Pages Exceeded	Set what to do when finishing (stapling or offsetting) capacity is exceeded during printing. **Value** **Ignore: Printing continues without finishing.** **Display Error: Message to cancel printing is displayed.** **NOTE** Requires the optional Document Finisher.
Punch Waste Full Error	Set what to do when the punch waste box becomes full during printing. **Value** **Ignore: Printing continues without punching.** **Display Error: Message to cancel printing is displayed.** **NOTE** Requires the optional Document Finisher and Punch Unit.
Paper Mismatch Error	Set what to do when the selected paper size or type does not match paper size or type loaded in the specified paper source while printing from the computer by specifying the cassette or multi-purpose tray. **Value** **Ignore: The setting is ignored and the job is printed.** **Display Error: Message to cancel printing is displayed.**

Item	Description
Inserted Paper Mismatch	Set what to do when it is detected that the cassette paper size setting does not match the actual paper size that is fed. **Value** **Ignore: The setting is ignored and the job is printed.** **Display Error: Message to cancel printing is displayed.**
Paper Jam before Staple	The page from which printing is resumed when a paper jam occurs during a job with stapling can be selected. **Value** **Resume at Top of Page: Resume printing from the first page of the document.** **Resume at Jammed Page: Resume printing from the page where the jam occurred.** **NOTE** Requires the optional Document Finisher.

Paper Output

[**System Menu/Counter**] key > [**Common Settings**] > [**Paper Output**]

Item	Description
Paper Output	Select the output tray respectively for copy jobs, print jobs from Document Box, computers, and FAX RX data. **Value:** **with optional job separator** • **Inner Tray:** **Outputs to the Inner Tray of the machine** • **Job Separator Tray:** **Delivery to the Job Separator.** **with optional 1,000-Sheet Finisher** • **Job Separator Tray*1:** **Delivery to the Job Separator.** • **Finisher Tray:** **Delivery to the Finisher Tray of the optional Document Finisher.** **with optional 4,000-Sheet Finisher** • **Job Separator Tray*1:** **Delivery to the Job Separator.** • **Tray A:** **Delivery to the Tray A of the optional Document Finisher** • **Tray B:** **Delivery to the Tray B of the optional Document Finisher** **with optional Mailbox** • **Job Separator Tray*1:** **Delivery to the Job Separator.** • **Tray A:** **Delivery to the Tray A of the optional Document Finisher** • **Tray B:** **Delivery to the Tray B of the optional Document Finisher** • **Tray 1 to 7:** **Delivery to tray 1 to 7 (tray 1 is the uppermost tray) of the optional Mailbox** **NOTE** • FAX RX data output can be specified when the optional FAX Kit is installed. • Requires the optional Job Separator or Document Finisher (1,000-Sheet Finisher or 4,000-Sheet Finisher). This function will not be displayed when the optional Inner Finisher is installed.

*1 The paper sizes cannot be output to the Job Separator Tray: A3, Ledger.

Orientation Confirmation

[**System Menu/Counter**] key > [**Common Settings**] > [**Orientation Confirmation**]

Item	Description
Orientation Confirmation	Select whether to display a screen for selecting the orientation of the originals to be placed on the platen when using the following functions. Original Orientation (page 6-23) • Zoom (XY Zoom) • Duplex • Margin/Centering • Border Erase • Combine • Memo Page • Page # • Booklet • Staple/Punch (optional feature) • 2-sided/Book Original • Text Stamp • Bates Stamp **Value: Off, On**

Color Toner Empty Action

[**System Menu/Counter**] key > [**Common Settings**] > [**Color Toner Empty Action**]

Item	Description
Color Toner Empty Action	Select whether printing is prohibited or the Print in Black and White setting is used for printing once the color toner runs out. **Value: Stop printing, Print in Black & White**

Function Defaults

[**System Menu/Counter**] key > [**Common Settings**] > [**Function Defaults**]

Item	Description
Orig. Orientation (Copy) **Orig. Orient.(Send/Store)**	Set the original orientation defaults. **Value: Top Edge on Top, Top Edge on Left, Auto*1**
Original Image (Copy)	Set the default original document type for copying. **Value: Text+Photo (Printer), Text+Photo (Magazine), Photo (Printer), Photo (Magazine), Photo (Photo Paper), Text, Text (Fine Line), Graphic/Map (Printer), Graphic/Map (Magazine)**
Org. Image (Send/Store)	Set the default original document type for sending/storing. **Value: Text+Photo, Photo, Text, Text(Fine Line), Text (for OCR)**
FAX TX Resolution*2	**FAX Operation Guide**
Scan Resolution	Select the default scanning resolution. **Value: 600×600dpi, 400×400dpi Ultra Fine, 300×300dpi, 200×400dpi Super Fine, 200×200dpi Fine, 200×100dpi Normal**
Color Selection (Copy)	Set the default copying color mode setting. **Value: Auto Color, Full Color, Black & White**
Color Select.(Send/Store)	Select the default color mode for scanning documents. **Value: Auto Color (Color/Gray), Auto Color (Color/B & W), Full Color, Grayscale, Black & White**

Item	Description
File Format	Set the default type of the files. **Value: PDF, TIFF, JPEG, XPS, OpenXPS, High Comp. PDF**
Backgrnd Density (Copy)	Set the default Backgrnd Density (Copy). **Value: Off, Auto, Manual (Darker 5)**
BackgrndDens. (Send/ Store)	Set the default Backgrnd Density (Send/Store). **Value: Off, Auto, Manual (Darker 5)**
Prevent Bleed-thru (Copy)	Set the default value for preventing bleed-through (Copy). **Value: Off, On**
Prevent Bleed (Send/Store)	Set the default Prevent Bleed (Send/Store). **Value: Off, On**
Zoom	Select the enlarged/reduced default when paper size/sending size changed after the originals set. **Value: 100%, Auto**
Border Erase Default	Set the default width to be erased as a border. **Value** **Metric: 0 to 50 mm (in 1 mm increments)** **Inch: 0 to 2" (in 0.01" increments)** **NOTE** To specify border erase widths around original, set the value in "Border". To specify border erase widths in the middle of original, set the value in "Gutter".
Border Erase to Back Page	Select the Border Erase Method for Back Page of a sheet. **Value: Same as Front Page, Do Not Erase**
Margin Default	Set the default margin. **Value** **Metric** **Left/Right: -18 to 18 mm (in 1 mm increments)** **Top/Bottom: -18 to 18 mm (in 1 mm increments)** **Inch** **Left/Right: -0.75 to 0.75" (in 0.01" increments)** **Top/Bottom: -0.75 to 0.75" (in 0.01" increments)**
Auto Image Rotation (Copy)	Select the default Auto Image Rotation setting. **Value: Off, On**
EcoPrint	Select the EcoPrint default. **Value: Off, On**
Toner Save Level (EcoPrint)	Select the default Toner Save Level (EcoPrint). **Value: 1 (Low) to 5 (High)** **NOTE** Raising the level reduces toner consumption, but image quality falls.
High Comp. PDF Image	Select the default quality setting for high compressed PDF files. **Value: Compression Ratio Priority, Standard, Quality Priority**
Color TIFF Compression	Select the compression method for sending the color documents in the TIFF format. **Value: TIFF V6, TTN2**

Item	Description
Image Quality (File Format)	Select the default PDF/TIFF/JPEG/XPS/OpenXPS file quality. **Value: 1 Low Quality (High Comp.) to 5 High Quality (Low Comp.)**
Collate/Offset	Set the defaults for Collate/Offset. **Value** **Collate: Off, On** **Offset: Off, Each Set (If [Off] is selected of Collate, it is set to [Each Page].)**
JPEG/TIFF Print	Select the image size (resolution) when printing JPEG or TIFF file. **Value: Fit to Paper Size, Image Resolution, Fit to Print Resolution**
XPS Fit to Page	Set the default value for the XPS fit to page function. **Value: Off, On**
PDF/A	Select the default PDF/A setting. **Value: Off, PDF/A-1a, PDF/A-1b, PDF/A-2a, PDF/A-2b, PDF/A-2u**
File Name Entry	Set an automatically entered name (default) for jobs. Additional information such as Date and Time and Job No. can also be set. **Value** **File Name: Up to 32 characters can be entered.** **Additional Info: None, Date and Time, Job No., Job No. & Date and Time, Date and Time & Job No.**
E-mail Subject/Body	Set the subject and body automatically entered (default subject and body) when sending the scanned originals by E-mail. Three body messages can be registered, and the initial template can be used to choose which body message is used. **Value** **Subject: Up to 60 characters can be entered.** **Body 1 to 3: Up to 500 characters can be entered.**
i-FAX Subject/Body	Set the subject and body automatically entered (default subject and body) when sending the scanned originals by i-FAX. **Value** **Subject: Up to 60 characters can be entered.** **Body: Up to 500 characters can be entered.** **NOTE** This function is displayed when the optional Internet FAX Kit is activated. Internet FAX Kit(A) "Internet FAX Kit" (page 11-6)
DP Read Action	Set the operation when a document is scanned from the document processor. **Value: Speed Priority, Quality Priority** **NOTE** This function is displayed when the optional document processor is installed.
OCR Text Recognition	Set the default OCR Text Recognition. **Value: Off, On** **NOTE** This function can only be used when the optional OCR Scan Activation Kit is installed. Scan Extension Kit(A) "OCR Scan Activation Kit" (page 11-7)

Item	Description
Primary OCR Language	Set the default language of the text to be extracted. ([**English**] is selected as a default.) Select the language to extract from the options displayed on the touch panel. **NOTE** This function can only be used when the optional OCR Scan Activation Kit is installed. Scan Extension Kit(A) "OCR Scan Activation Kit" (page 11-7)
Repeat Copy	Select the Repeat Copy default. **Value: Off, On** **NOTE** • This function will not be displayed when the optional Data Security Kit is installed. • This function will not be displayed when Repeat Copy Job Retention is set to 0.
Skip Blank Page (Copy) **Skip Blank Page (Send/ Store)**	Select the default Skip Blank Page settings. **Value: Off, On**
File Separation	Select the default file separation setting. **Value: Off, On** **NOTE** If you select [**On**], set the number of pages to be divided. The setting range is 1 to 500 pages.
Cont. Scan (Copy)	Select the default Continuous Scan(Copy) setting. **Value: Off, On**
Continuous Scan (FAX)*2	**FAX Operation Guide**
Cont. Scan (Send/Store)	Select the default Continuous Scan(Send/Store) setting. **Value: Off, On**
Trapping	Select the default trapping level. **Value: Off, Light, Medium, Heavy**

*1 This function can only be used when the optional OCR Scan Activation Kit is installed.
*2 Displayed only when the optional FAX Kit is installed.

Optional Keyboard Type

[**System Menu/Counter**] key > [**Common Settings**] > [**Optional Keyboard Type**]

Item	Description
Optional Keyboard Type	Select the type of optional keyboard that you want to use. **Value: US-English, US-English with Euro, French, German, UK-English**

System Stamp

[**System Menu/Counter**] key > [**Common Settings**] > [**System Stamp**]

Item		Description
Basic		Configure settings for stamps.
	Text (Text Stamp)	Select [**Add/Edit**] to edit the test string for a template. Up to 8 templates can be registered. Select [**Delete**] to delete a template.
	Font (Page #)	Set the font size for page numbers when printing them. **Value** **Size 1 to 3: 6.0 to 64.0 pt**
	Font (Bates Stamp)	When a bates stamp is used, set the font sizes that can be set. **Value** **Size 1 to 3: 6.0 to 64.0 pt**
	Font (Text Stamp)	Set the font size for stamps when printing them. **Value** **Size 1 to 3: 6.0 to 64.0 pt**

Item			Description
Printing Jobs			Configure settings for stamps when a document is printed. After configuring the setting, return to the Copying Functions or Custom Box (Printing a Document) screen from System Menu, and select the [**Reset**] key.
	Text Stamp		Select whether to print a text stamp on all printing jobs. **Value: Off, On** **NOTE** When [**On**] is selected, the Text Stamp settings cannot be changed when printing.
	Edit Text Stamp		Set the default text stamp.
		Stamp	Select a text string to be stamped from templates, or select [**Stamp**] and enter a maximum of 32 characters for the text string. **NOTE** Templates that have been set will appear. For details on registering templates, refer to the following: Text (Text Stamp) (page 8-22)
		Stamp Method	Select the stamp method for the text stamp. **Value: Each Print Page, Each Original Page**
		Position	Set the text stamp position. **Value: Top Left, Top Middle, Top Right, Middle Left, Center, Middle Right, Bottom Left, Bottom Middle, Bottom Right, Detail** **NOTE** Select [**Detail**] to specify the detailed stamp position using numeric values, and to set the stamp position and angle when a stamp is placed on the back side of the paper in duplex printing.
		Font	Set the font of the text stamp. **Value** **Size: Font sizes registered in Font (Text Stamp) are displayed.** Font (Text Stamp) (page 8-22) **Character Border: Off, Circle, Rectangle, Underline** **Style: None, Bold, Italic, Bold/Italic** **Font: Courier, Letter Gothic** **Color: Black, Red, Green, Blue, Cyan, Magenta, Yellow, White** **Density: 10 to 100% (in 10% increments)** **Display Pattern: Transparent, Clipping, Overwrite**

Item		Description
Printing Jobs		
	Bates Stamp	Select whether to print a bates stamp on all printing jobs. **Value: Off, On** **NOTE** When [**On**] is selected, the Bates Stamp settings cannot be changed when printing.
	Edit Bates Stamp	Set the default Bates Stamp. **Value: Date, User Name, Serial Number, Numbering, Text 1, Text 2, Date Format, Numbering Default, Position, Font** **NOTE** To set [**Text 1**] or [**Text 2**], select [**Change**] below and enter a maximum of 32 characters for the text string. To set [**Date**], select [**Date Format**] and set the date display format. To set [**Numbering**], select [**Numbering Default**] and set the starting sequence number (1 to 9999999). If you select [**Fixed Digit Number**] > [**On**], you can set the number of digits of the serial number (1 to 7 digits). Select [**Detail**] in "Position" to specify the detailed stamp position using numeric values, and to set the stamp position to be placed on the back side of the paper in duplex printing.

Item	Description
Sending Jobs	Configure stamp settings for sending documents. After configuring the setting, return to the Sending Functions or Custom Box (Sending Documents) screen from System Menu, and select the [**Reset**] key.
Text Stamp	Select whether to print a text stamp on all sending jobs. **Value: Off, On** **NOTE** When [**On**] is selected, the Text Stamp settings cannot be changed when sending.
Edit Text Stamp	Set the default text stamp.
Stamp	Select a text string to be stamped from templates, or select [**Stamp**] and enter a maximum of 32 characters for the text string. **NOTE** Templates that have been set will appear. For details on registering templates, refer to the following: Text (Text Stamp) (page 8-22)
Position	Set the text stamp position. **Value: Top Left, Top Middle, Top Right, Middle Left, Center, Middle Right, Bottom Left, Bottom Middle, Bottom Right, Detail** **NOTE** Select [**Detail**] to specify the detailed stamp position using numeric values, and to set the stamp angle.
Font	Set the font of the text stamp. **Value** **Size: Font sizes registered in Font (Text Stamp) are displayed.** Font (Text Stamp) (page 8-22) **Character Border: Off, Circle, Rectangle, Underline** **Style: None, Bold, Italic, Bold/Italic** **Font: Courier, Letter Gothic** **Color: Black, Red, Green, Blue, Cyan, Magenta, Yellow, White** **Density: 10 to 100% (in 10% increments)** **Display Pattern: Transparent, Clipping, Overwrite**

Item		Description
Sending Jobs		
	Bates Stamp	Select whether to print a bates stamp on all sending jobs. **Value: Off, On** **NOTE** When [**On**] is selected, the Bates Stamp settings cannot be changed when sending.
	Edit Bates Stamp	Set the default Bates Stamp. **Value: Date, User Name, Serial Number, Numbering, Text 1, Text 2, Date Format, Numbering Default, Position, Font** **NOTE** To set [**Text 1**] or [**Text 2**], select [**Change**] below and enter a maximum of 32 characters for the text string. To set [**Date**], select [**Date Format**] and set the date display format. To set [**Numbering**], select [**Numbering Default**] and set the starting sequence number (1 to 9999999). If you select [**Fixed Digit Number**] > [**On**], you can set the number of digits of the serial number (1 to 7 digits). Select [**Detail**] in "Position" to specify the detailed stamp position using numeric values.

Item	Description
Storing Jobs	Configure stamp settings for storing documents in removable memory. After configuring the setting, return to the Custom Box (Storing Documents) screen from System Menu, and select the [**Reset**] key.
Text Stamp	Select whether to print a text stamp on all storing jobs. **Value: Off, On** **NOTE** When [**On**] is selected, the Text Stamp settings cannot be changed when storing.
Edit Text Stamp	Set the default text stamp.
Stamp	Select a text string to be stamped from templates, or select [**Stamp**] and enter a maximum of 32 characters for the text string. **NOTE** Templates that have been set will appear. For details on registering templates, refer to the following: Text (Text Stamp) (page 8-22)
Position	Set the text stamp position. **Value: Top Left, Top Middle, Top Right, Middle Left, Center, Middle Right, Bottom Left, Bottom Middle, Bottom Right, Detail** **NOTE** Select [**Detail**] to specify the detailed stamp position using numeric values, and to set the stamp angle.
Font	Set the font of the text stamp. **Value** **Size: Font sizes registered in Font (Text Stamp) are displayed.** Font (Text Stamp) (page 8-22) **Character Border: Off, Circle, Rectangle, Underline** **Style: None, Bold, Italic, Bold/Italic** **Font: Courier, Letter Gothic** **Color: Black, Red, Green, Blue, Cyan, Magenta, Yellow, White** **Density: 10 to 100% (in 10% increments)** **Display Pattern: Transparent, Clipping, Overwrite**

Item		Description
Storing Jobs		
	Bates Stamp	Select whether to print a bates stamp on all storing jobs. **Value: Off, On** **NOTE** When [**On**] is selected, the Bates Stamp settings cannot be changed when storing.
	Edit Bates Stamp	Set the default Bates Stamp. **Value: Date, User Name, Serial Number, Numbering, Text 1, Text 2, Date Format, Numbering Default, Position, Font** **NOTE** To set [**Text 1**] or [**Text 2**], select [**Change**] below and enter a maximum of 32 characters for the text string. To set [**Date**], select [**Date Format**] and set the date display format. To set [**Numbering**], select [**Numbering Default**] and set the starting sequence number (1 to 9999999). If you select [**Fixed Digit Number**] > [**On**], you can set the number of digits of the serial number (1 to 7 digits). Select [**Detail**] in "Position" to specify the detailed stamp position using numeric values.

Manual Staple

[**System Menu/Counter**] key > [**Common Settings**] > [**Manual Staple**]

NOTE
Only displayed when the optional 4,000-Sheet Finisher is installed.

Item	Description
Manual Staple	Select whether to use Manual Staple. **Value: Off, On** **NOTE** If you selected [**On**], set the time until manual stapling mode is automatically cancelled. The setting range is 5 to 60 seconds (in 5-second increments).
Staple Position	Set the default Staple Position. **Value: A4, Letter**

Offset Documents by Job

[**System Menu/Counter**] key > [**Common Settings**] > [**Offset Documents by Job**]

Item	Description
Offset Documents by Job	Select whether to offset documents by Job. **Value: Off, On** **NOTE** This function is displayed when an optional Document Finisher is installed.

Low Toner Alert Level

[**System Menu/Counter**] key > [**Common Settings**] > [**Low Toner Alert Level**]

Item	Description
Low Toner Alert	Set the amount of remaining toner to notify the administrator when to order a toner when the toner is running low. This notification is used for event report, Status Monitor, SNMP Trap. **Value: Off, On** **NOTE** If [**On**] is selected, set the amount of remaining toner to alert. The setting range is 5 to 100% (in 1% increments).

Toner Waste Full Alert

[**System Menu/Counter**] key > [**Common Settings**] > [**Toner Waste Full Alert**]

Item	Description
Toner Waste Full Alert	Notify the administrator when the waste toner box is almost full. Set the notification timer based on the amount of toner in the waste toner box. **Value: Off, On** **NOTE** If [**On**] is selected, set the timing when the waster toner box becomes full by specifying the capacity of the waster toner box. The setting range is 10 to 90% (in 10% increments).

Offset One Page Documents

[**System Menu/Counter**] key > [**Common Settings**] > [**Offset One Page Documents**]

Item	Description
Offset One Page Documents	Set whether one-page documents are sorted. **Value: Off, On** **NOTE** This function is displayed when an optional Sheet Finisher is installed.

Display Status/Log

[**System Menu/Counter**] key > [**Common Settings**] > [**Display Status/Log**]

Set the display method of the Status/Log.

Item	Description
Display Jobs Detail Status	**Value: Show All, My Jobs Only, Hide All**
Display Jobs Log	**Value: Show All, My Jobs Only, Hide All**
Display FAX Log*1	**Value: Show All, Hide All**

*1 Displayed only when the optional FAX Kit is installed.

Message Banner Print

[**System Menu/Counter**] key > [**Common Settings**] > [**Message Banner Print**]

Item	Description
Message Banner Print	Set whether the confirmation screen appears before each sheet is printed when printing multiple banner sheets. **Value: Off, On**

Customize Status Display

[**System Menu/Counter**] key > [**Common Settings**] > [**Customize Status Display**]

Set the items that appear in the status screens for printing jobs, sending jobs, and storing jobs.

Item	Description
Printing Jobs Column 1	**Value: Job Name, User Name, Print Pages x Copies, Total Printed Pages, Color/Black & White**
Printing Jobs Column 2	**Value: Job Name, User Name, Print Pages x Copies, Total Printed Pages, Color/Black & White**
Sending Jobs Column 1	**Value: Job Name, User Name, Destination, Original Pages, Color/Black & White**
Sending Jobs Column 2	**Value: Job Name, User Name, Destination, Original Pages, Color/Black & White**
Storing Jobs Column 1	**Value: Job Name, User Name, Original Pages, Color/Black & White**
Storing Jobs Column 2	**Value: Job Name, User Name, Original Pages, Color/Black & White**

Message Board Settings

[**System Menu/Counter**] key > [**Common Settings**] > [**Message Board Settings**]

Item			Description
Message Board			Select whether to use the Message Board. **Value: Off, On**
Message List			Configure settings for the registered message board.
	Add		Add a new message board.
		Device to Show	Select where to show the message. **Value** **Hide: Displays no message.** **Operation Panel: Displays a message on the operation panel.** **Embedded Web Server: Displays a message in Command Center RX.** **Panel + Web Server: Displays a message in the operation panel and the Command Center RX.**
		Message Type	Select the message type. **Value: Normal, Alert, Prohibition**
		Place to Show	Select where to show the message in the touch panel. **Value:** **Login Screen: Login screen of user login administration** **Home Screen: Home Screen** **Login Screen+Home Screen: Login screen and Home screen of user login administration**
		Priority Show	Displays the message on the message board. **Value: Off, On**
		Title	Enter a maximum of 30 characters for the title to display on the message board.
		Body	Enter a maximum of 300 characters for the body to display on the message board.
	Delete		Deletes the message board selected on the list.
	Raise Priority		Raise the priority of the message board selected on the list.
	Lower Priority		Lower the priority of the message board selected on the list.
	Detail/Edit		Display information on the selected message board.

Remote Printing

[**System Menu/Counter**] key > [**Common Settings**] > [**Remote Printing**]

Item	Description
Remote Printing	Select whether to prohibit printing that is performed without operating the machine. When [**Prohibit**] is selected, a document that has been stored in the document box from the printer driver can be printed from the machine. This prevents another person from seeing that document. **Value: Prohibit, Permit** **NOTE** If [**Prohibit**] is selected, printing and storing using Quick Copy and Proof and Hold functions are disabled. Printing a received FAX (optional) is not prohibited.

Numeric Keypad Settings

[**System Menu/Counter**] key > [**Common Settings**] > [**Numeric Keypad Settings**]

Item		Description
Default Display	**Copy/Print from Box**	Select whether or not to display the numeric keypad. **Value: Off, On**
	HyPAS Application	
Layout (HyPAS Application)		Select the HyPAS numeric keypad layout to display upon startup. **Value: Floating, Horizontal, On the Right**

Prevent Light Reflection

[**System Menu/Counter**] key > [**Common Settings**] > [**Prevent Light Reflection**]

Item	Description
Prevent Light Reflection	Prevent light reflection when using the Erase Shadowed Areas feature. **Value: Off, On**

Function Key Assignment

[**System Menu/Counter**] key > [**Common Settings**] > [**Function Key Assignment**]

Assign a function to each function key.

Item	Description
Function Key 1	**Value: Copy, Send, FAX*1, Custom Box, Job Box, Removable Memory, FAX Box, Send to Me (E-mail), Send to Me from Box (E-mail), Internet Browser, None, Program*2, Application*3**
Function Key 2	
Function Key 3	**NOTE** You can select the functions to be displayed for [**All**], [**Application**], [**Program**] and [**Others**].

*1 Displayed only when the optional FAX Kit is installed.
*2 The registered program will be displayed.
*3 The running application will be displayed.

Show Power Off Message

[**System Menu/Counter**] key > [**Common Settings**] > [**Show Power Off Message**]

Item	Description
Show Power Off Message	Set the mode whether display a confirmation message in power supply off. **Value: Off, On**

Home

[**System Menu/Counter**] key > [**Home**]

Configure settings for Home screen.

Editing the Home Screen (page 2-15)

Copy

[**System Menu/Counter**] key > [**Copy**]

Configures settings for copying functions.

Item	Description
Paper Selection	Set the default paper selection. **Value: Auto, Default Paper Source**
Auto Image Rotation Action	Set whether the image is rotated when the orientation of the document to be printed is different from the orientation of the paper. **Value** **Unrotated Manual Copy: If a paper source or zoom ratio is specified, the image is not rotated.** **Apply All: Rotates all images.** **Follow Image Size: The image is rotated if the rotated image fits on the paper.**
Auto Paper Selection	If [**Auto**] is selected for Paper Selection, set the paper size selection method when the zoom changes. **Value** **Most Suitable Size: Selects paper size based on the current zoom and the size of the original.** **Same as Original Size: Selects paper that matches the size of the original, regardless the zoom.**
Auto % Priority	When a paper source of different size from the original is selected, select whether automatic zoom (reduce/zoom) is performed. **Value: Off, On**
Paper Size for Small Original	Specify the paper size to be used for a case where the original is too small to be detected in the Auto Paper Selection mode. **Value: Default Paper Source, A4-R, A4, A5-R, A6-R, B5-R, B5, B6-R, Letter-R, Letter, Statement-R**
Preset Limit	Restrict the number of copies that can be made at one time. **Value: 1 to 999 copies**
Reserve Next Priority	Specify whether the default screen appears when a subsequent copy job is reserved while printing is in progress. To have the default screen appear, select [**On**]. **Value: Off, On**
Quick Setup Registration	Select the functions to be registered for Quick Setup. Six keys of the Quick Setup screen are allocated to typical functions but can be changed as necessary. Six items in the following options are available. **Value: Paper Selection, Zoom, Staple/Punch*1, Density, Duplex, Combine, Collate/Offset, Original Image, Original Size, Original Orientation, Color Selection, Continuous Scan, Background Density Adj.**

*1 This setting is displayed when the optional Document Finisher is installed. When a punching unit is not installed, this item name is "Staple".

Send

[**System Menu/Counter**] key > [**Send**]

Configures settings for sending functions.

Item	Description
Quick Setup Registration	Select the functions to be registered for Quick Setup. Six keys of the Quick Setup screen are allocated to typical functions but can be changed as necessary. Six items in the following options are available. **Value: Original Size, 2-sided/Book Original*1, Sending Size, Original Orientation, File Format, Density, Original Image, Scan Resolution, FAX TX Resolution*2, Color Selection, Zoom, Continuous Scan, Background Density Adj.**
Dest. Check before Send	Select whether to display the confirmation screen of destinations after pressing the [**Start**] key when performing sending jobs. **Value: Off, On**
Color Type	Set the color type when you send color documents. **Value: RGB, sRGB**
Entry Check for New Dest.	When adding new destination, select whether to display the entry check screen to check the entered destination. **Value: Off, On**
Default Screen	Set the default screen displayed when you select the [**Send**] key. **Value: Destination, Address Book**

Item		Description
Send and Forward		Select whether to forward the original to another destination when sending images.
	Forward	Select whether to forward the original. **Value: Off, On** **NOTE** When selecting [**On**], select rules to forward from [**E-mail**], [**Folder(SMB)**], [**Folder(FTP)**], [**FAX**]*2, [**i-FAX(Via server-On)**]*3, and [**i-FAX(Via server-Off)**]*3.
	Destination	Set the destination to which the original is forwarded. One destination can be set. Follow the steps below to register the destination. • Address Book • E-mail Addr Entry • Folder Path Entry Specifying Destination (page 5-43)
	Color Setting	Configure the color settings for forwarded original. **Value: Auto Color (Color/Gray), Auto Color (Color/B & W), Full Color, Grayscale, Black & White**
	Scan Resolution	Select resolution for stored original. **Value: 600x600dpi, 400x400dpi Ultra Fine, 300x300dpi, 200x400dpi Super Fine, 200x200dpi Fine, 200x100dpi Normal**
	File Format	Select the file format of forwarded original. File format for Send and Forward (page 8-36)
	File Separation	Set whether originals are divided into multiple files before being forwarded. **Value: Off, Each Page**
	E-mail Subject	Enter a maximum of 60 characters for the subject of forwarded E-mail. Character Entry Method (page 11-10)
	FTP Encrypted TX	Set whether originals are encrypted before being forwarded. **Value: Off, On** **NOTE** This function is displayed when SSL is set to [**On**] in Security Settings. Security Settings (page 8-59)
New Destination Entry		Select whether to permit direct entry of destination. **Value: Prohibit, Permit**
Recall Destination		Select whether to permit usage of [**Recall**] on the Send screen. **Value: Prohibit, Permit**
Broadcast		Set whether to enable broadcast. **Value: Prohibit, Permit**

Item	Description
HighCompressionPDF Mode	Select the compression method for sending High-Compression PDF. **Value: Text Priority, File Size Priority**
OCR Text Recognition Act.	Configure settings for OCR Text Recognition Action. **Value: Speed Priority, Quality Priority** **NOTE** This function can only be used when the optional OCR Scan Activation Kit is installed. Scan Extension Kit(A) "OCR Scan Activation Kit" (page 11-7)

*1 When the optional document processor is not installed, this is set to "Book Original".
*2 Displayed only when the optional fax kit is installed.
*3 This function is displayed when the optional Internet FAX Kit is activated.

File format for Send and Forward

[**System Menu/Counter**] key > [**Send**] > [**Send and Forward**] > [**File Format**]

Select the file format for forwarded original.

The table below lists the file formats and their details.

File format	Adjustable range of image quality	Color setting
PDF*	1 Low Quality (High Comp.) to 5 High Quality (Low Comp.)	Auto Color (Color/Grayscale), Auto Color (Color/Black and White), Full Color, Grayscale, Black and White
TIFF	1 Low Quality (High Comp.) to 5 High Quality (Low Comp.)	Auto Color (Color/Grayscale), Auto Color (Color/Black and White), Full Color, Grayscale, Black and White
JPEG	1 Low Quality (High Comp.) to 5 High Quality (Low Comp.)	Auto Color (Color/Grayscale), Full Color, Grayscale
XPS	1 Low Quality (High Comp.) to 5 High Quality (Low Comp.)	Auto Color (Color/Grayscale), Auto Color (Color/Black and White), Full Color, Grayscale, Black and White
OpenXPS	1 Low Quality (High Comp.) to 5 High Quality (Low Comp.)	Auto Color (Color/Grayscale), Auto Color (Color/Black and White), Full Color, Grayscale, Black and White
High Comp. PDF *1	Compression Ratio Priority, Standard, Quality Priority	Auto Color (Color/Grayscale), Auto Color (Color/Black and White), Full Color, Grayscale

*1 File format can be selected. (**Value**: [**Off**] / [**PDF/A-1a**] / [**PDF/A-1b**] / [**PDF/A-2a**] / [**PDF/A-2b**] / [**PDF/A-2u**])

PDF Encryption Functions

If you have selected PDF or High Comp. PDF for file format, you can restrict the access level for displaying, printing, and editing PDF's by assigning a secure password.
Items that can be set vary depending on the setting selected in "Compatibility".

When [Acrobat 3.0 or later] is selected

[**System Menu/Counter**] key > [**Send**] > [**Send and Forward**] > [**File Format**] > [**PDF/High Comp. PDF**] > [**Encryption**]

Item			Value	Description
Password to Open Document			Off, On	Enter the password to open the PDF file. Select [**Password**], enter a password (up to 256 characters) and then select [**OK**]. Select [**Confirmation**] to enter the password again for confirmation, and select [**OK**].
Password to Edit/Print Document			Off, On	Enter the password to edit the PDF file. Select [**Password**], enter a password (up to 256 characters) and then select [**OK**]. Select [**Confirmation**] to enter the password again for confirmation, and select [**OK**]. When you have entered the password to edit/print document, you can specifically limit the operation.
	Detail	**Printing Allowed**	Not Allowed, Allowed	Restricts printing of the PDF file.
		Changes Allowed	Not Allowed	Disables the change to the PDF file.
			Commenting	Can only add commenting.
			Page Layout except extracting Pages	Can change the page layout except extracting the pages of the PDF file.
			Any except extracting Pages	Can conduct all operations except extracting the pages of the PDF file.
		Copying of Text/Images/ Others	Disable, Enable	Restricts the copying of text and objects on the PDF file.

When [Acrobat 5.0 or later] is selected

[**System Menu/Counter**] key > [**Send**] > [**Send and Forward**] > [**File Format**] > [**PDF/High Comp. PDF**] > [**Encryption**]

Item			Value	Description
Password to Open Document			Off, On	Enter the password to open the PDF file. Select [**Password**], enter a password (up to 256 characters) and then select [**OK**]. Select [**Confirmation**] to enter the password again for confirmation, and select [**OK**].
Password to Edit/Print Document			Off, On	Enter the password to edit the PDF file. Select [**Password**], enter a password (up to 256 characters) and then select [**OK**]. Select [**Confirmation**] to enter the password again for confirmation, and select [**OK**]. When you have entered the password to edit/print document, you can specifically limit the operation.
	Detail	**Printing Allowed**	Not Allowed	Disables the printing of PDF file.
			Allowed (Low Resolution only)	Can print the PDF file only in low resolution.
			Allowed	Can print the PDF file in original resolution.
		Changes Allowed	Not Allowed	Disables the change to the PDF file.
			Inserting/Deleting/ Rotating Pages	Can only insert, delete, and rotate the pages of the PDF file.
			Commenting	Can only add commenting.
			Any except extracting Pages	Can conduct all operations except extracting the pages of the PDF file.
		Copying of Text/Images/ Others	Disable, Enable	Restricts the copying of text and objects on the PDF file.

Document Box/Removable Memory

[**System Menu/Counter**] key > [**Document Box/Removable Memory**]

Configures settings related to the Custom Box, Job Box, Sub Address Box and Polling Box.

Item		Description
Custom Box		Configure settings for Custom Box.
	Add/Edit Box	Creating a New Custom Box (page 5-55)
	Default Setting	Auto File Deletion Time Set the time to automatically delete stored documents.
FAX Box*1		**FAX Operation Guide**
Job Box		Configure settings for Job Box.
	Quick Copy Job Retention	To maintain free space on the hard disk, you can set the maximum number of stored jobs. **Value: number between 0 and 300** **NOTE** When 0 is set, Quick Copy cannot be used.
	Repeat Copy Job Retention	To maintain free space on the hard disk, you can set the maximum number of stored jobs. **Value: number between 0 and 50** **NOTE** This function will not be displayed when the optional Data Security Kit is activated. When 0 is set, Repeat Copy cannot be used.
	Deletion of Job Retention	This setting specifies that documents, such as Private Printing, Quick Copying, or Proof and Hold Printing, saved temporarily in the job box are automatically deleted after they have been saved for a set time. **Value: Off, 1 hour, 4 hours, 1 day, 1 week** **NOTE** This function is valid for documents saved after the function is set. Regardless of this function setting, temporary documents are deleted when the power switch is turned off.
Polling Box*1		**FAX Operation Guide**

Item		Description
Quick Setup Registration		Select the functions to be registered for Quick Setup. Six keys of the Quick Setup screen are allocated to typical functions but can be changed as necessary.
	Store File	Select the functions to be registered for Store File Quick Setup. **Color Selection, Storing Size, Density, 2-sided/Book Original*2, Scan Resolution, Zoom, Original Orientation, Original Size, Original Image, Continuous Scan, Background Density Adj.** **Value: Off, Key 1 to 6**
	Print	Select the functions to be registered for Print Quick Setup. **Paper Selection, Collate/Offset, Staple/Punch, Duplex*3, Combine, Delete after Printed, Color Selection** **Value: Off, Key 1 to 6**
	Send	Select the functions to be registered for Send Quick Setup. **Sending Size, FAX TX Resolution*1, File Format, Delete after Transmitted, Color Selection** **Value: Off, Key 1 to 6**

*1 Displayed only when the optional FAX Kit is installed.
*2 When the optional document processor is not installed, this is set to "Book Original".
*3 Display only when an optional Sheet Finisher is installed. When a punching unit is not installed, this item name is "Staple".

FAX

[**System Menu/Counter**] key > [**FAX**]

Configure settings for FAX.

FAX Operation Guide

Printer

[**System Menu/Counter**] key > [**Printer**]

Printing from computers, settings are generally made on the application software screen. However, the following settings are available for configuring the defaults to customize the machine.

Item		Description
Emulation		Select the emulation for operating this machine by commands oriented to other types of printers. **Value: PCL6, KPDL, KPDL (Auto)** **NOTE** When you have selected [**KPDL (Auto)**], set "Alt Emulation", too. When you have selected [**KPDL**] or [**KPDL (Auto)**], set "KPDL Error Report", too.
	Alt Emulation	When you have selected [**KPDL (Auto)**] as emulation mode, you can switch between KPDL and another emulation mode (alternative emulation) automatically according to the data to print. **Value: PCL6**
	KPDL Error Report	When an error has occurred during printing in KPDL emulation mode, set whether or not the error report is output. **Value: Off, On**

Item	Description
Color Setting	You can choose whether reports are printed in color or black and white. **Value: Color, Black & White**
Gloss Mode	Gloss Mode increases the effect of glossiness in printing. However, printing takes longer time. **Value: Off, On** **IMPORTANT** **This function is not available when [Labels] or [Transparency] is selected as the paper type setting.** Cassette/MP Tray Settings (page 8-7) Depending on the paper used, printing in gloss mode may cause curl in paper. To reduce curl, try using thicker paper.
EcoPrint	EcoPrint conserves toner when printing. This is recommended for test copies where faded printing is not a problem. **Value: Off, On**
Toner Save Level (EcoPrint)	Select the default Toner Save Level (EcoPrint). **Value: 1 (Low) to 5 (High)** **NOTE** Raising the level reduces toner consumption, but image quality falls.
Override A4/Letter	Select whether to treat A4 size and Letter, which are similar in size, as the same size when printing. **Value** **Off: A4 and Letter are not regarded as the same in size.** **On: A4 and Letter are regarded as the same in size. The machine will use whichever size is in the paper source.**
Duplex	Select binding orientation for duplex mode. **Value: 1-sided, 2-sided Bind LongEdge, 2-sided Bind ShortEdge**
Copies	Set the default number of copies, from 1 to 999. **Value: 1 to 999 copies**
Orientation	Set the default orientation, [**Portrait**] or [**Landscape**]. **Value: Portrait, Landscape**
Form Feed TimeOut	Receiving print data from the computer, the machine may sometimes wait if there is no information signaling that the last page does not have any more data to be printed. When the preset timeout passes, the machine automatically prints paper. The options are between 5 and 495 seconds. **Value: 5 to 495 seconds (in 5 second increments)**
LF Action	Set the line feed action when the machine receives the line feed code (character code 0AH). **Value: LF Only, LF and CR, Ignore LF**
CR Action	Set the character return action when the machine receives the character return code (character code 0DH). **Value: CR Only, LF and CR, Ignore CR**

Item	Description
Job Name	Set whether the job name set in the printer driver is displayed. **Value: Off, On** **NOTE** When selecting [**On**], select the job name to be displayed from [**Job Name**], [**Job No. & Job Name**], or [**Job Name & Job No.**].
User Name	Set whether the user name set in the printer driver is displayed. **Value: Off, On**
Paper Feed Mode	While printing from the computer, select how to feed paper when the paper source and type are specified. **Value** **Auto: Search the paper source that matches the selected paper size and type.** **Fixed: Print on paper loaded in the specified paper source.**
MP Tray Priority	If paper is set in the MP Tray then it is possible for priority to be given to that MP tray in the paper feed. **Value** **Off: The printer driver settings are followed.** **Auto Feed: If Auto is selected in the printer driver and there is paper in the MP tray then the paper feed will be from the MP tray.** **Always: If there is paper in the MP tray then the paper feed will be from the MP tray regardless of what is set in the printer driver.**
Auto Cassette Change	Select the following actions when the paper runs out in the paper source while printing. **Value: Off, On** **NOTE** • When selecting [**Off**], the machine displays "Add the following paper in cassette #." (# is a cassette number) or "Add the following paper in the multi purpose tray.", and stops printing. • Load the paper according to the paper source displayed to resume printing. • To print from the other paper cassette, select [**Paper Selection**]. Select the desired paper source. • When selecting [**On**], the machine continues printing automatically when the other cassette contains the same paper as the currently-used cassette.
Wide A4	Turn this to on to increase the maximum number of characters that can be printed in a line for an A4 page (78 characters at 10 pitch) and Letter size page (80 characters at 10 pitch). This setting is only effective in PCL6 emulation. **Value: Off, On**
Resolution	Set the resolution used for printing. **Value: 600 dpi, 1200 dpi** **NOTE** Settings that are received from the printer driver have priority over the operation panel settings.
KIR	Select the default KIR (smoothing) setting. **Value: Off, On**

Report

Print reports to check the machine settings, status, and history. Settings for printing reports can also be configured.

Print Report

[**System Menu/Counter**] key > [**Report**] > [**Print Report**]

Item	Description
Status Page	Prints the status page, allowing you to check the information including current settings, available memory space, and optional equipment installed. 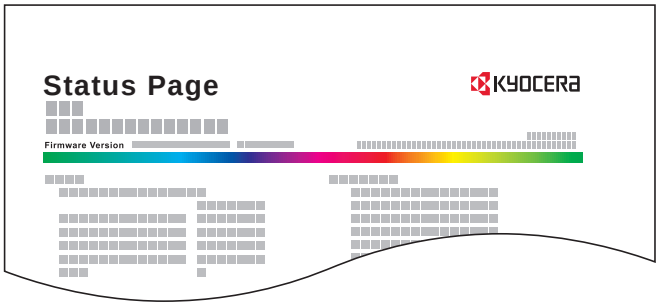
Font List	Prints the font list, allowing you to check the font samples installed in the machine. 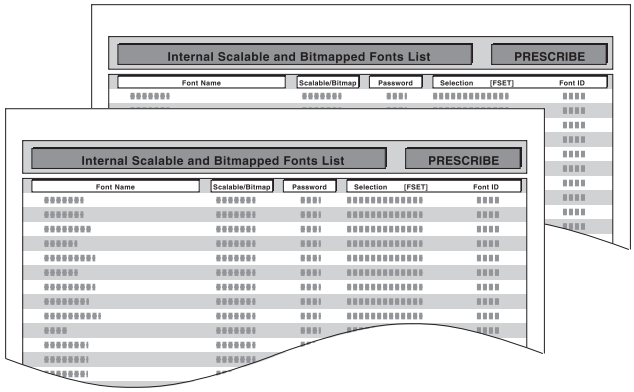
Network Status	Prints the network status, allowing you to check the information including network interface firmware version, network address and protocol. 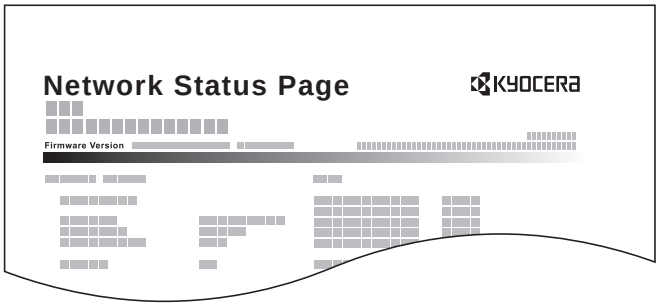

Item	Description
Service Status	Prints the service status. More detailed information is available than on the Status Page. Service personnel usually print the service status pages for maintenance purpose.
Optional Network Status	Prints the optional network status, allowing you to check the information including optional network interface firmware version, network address and protocol. **NOTE** This function is displayed when the optional Network Interface Kit or Wireless Network Interface Kit is installed.

Admin Report Settings

[**System Menu/Counter**] key > [**Report**] > [**Admin Report Settings**]

Configure settings for Outgoing FAX report and Incoming FAX report.

FAX Operation Guide

Result Report Setting

[**System Menu/Counter**] key > [**Report**] > [**Result Report Setting**]

Item		Description
Send Result Report		Automatically print a report of transmission result when a transmission is complete.
	E-mail/Folder	Automatically print a report of transmission result when E-mail or SMB/FTP transmission is complete. **Value: Off, On, Error Only**
	FAX*1	**FAX Operation Guide**
	Canceled before Sending*2	Print a send result report if the job is canceled before being sent. **Value: Off, On**
	Recipient Format*2	Select the Recipient Format for the send result report. **Value: Name or Destination, Name and Destination**
FAX RX Result Report*1		**FAX Operation Guide**
Job Finish Notice Setting*1		**FAX Operation Guide**
RX Result Report Type*1*3		**FAX Operation Guide**

*1 Displayed only when the optional FAX Kit is installed.
*2 When "E-mail/Folder" and "FAX" are set to [**Off**], this function will not be displayed.
*3 This is not displayed if you selected [**Off**] for FAX RX Result Report.

Sending Log History

[**System Menu/Counter**] key > [**Report**] > [**Sending Log History**]

Item	Description
Auto Sending	This function automatically sends the log history to the specified destinations whenever a set number of jobs has been logged. **Value: Off, On** **NOTE** If [**On**] is selected, specify the number of job histories. The setting range is 1 to 1,500.
Send Log History	You can also send the log history to the specified destinations manually.
Destination	Set the destination to which log histories are sent. Only E-mail address can be set.
Job Log Subject	Set the subject automatically entered when sending log histories by E-mail. **Value: Up to 60 characters**
SSFC Log Subject	Enter the subject of the printed job history with IC card authentication. **Value: Up to 60 characters**
Personal Information	Select whether to include personal information in the job log. **Value: Include, Exclude**

Login History Settings

[**System Menu/Counter**] key > [**Report**] > [**Login History Settings**]

Item	Description
Login History	Select whether to record the Login History. **Value: Off, On** **NOTE** If [**On**] is selected, set the number of histories to be recorded. The setting range is 1 to 1,000.
Auto Sending	Select whether the login history is automatically sent to the set address when the number of entries reaches the number set in "Login History". **Value: Off, On** **NOTE** This function is displayed when "Login History" is set to [**On**].
Destination	Set the destination to which login histories are sent. E-mail address only can be set as destination. **NOTE** This function is displayed when "Login History" is set to [**On**].
Subject	Set the subject automatically entered when sending login histories by E-mail. **Value: Up to 60 characters** **NOTE** This function is displayed when "Login History" is set to [**On**].
Log Reset	Resets the recorded login histories.

NOTE

If the user authentication screen appears, enter your login user name and login password and select [**Login**]. For this, you need to login with administrator privileges. The factory default login user name and login password are set as shown below.

Model Name	Login User Name	Login Password
2552ci	2500	2500
3252ci	3200	3200
3552ci	3500	3500
4052ci	4000	4000
5052ci	5000	5000
6052ci	6000	6000

Device Log History Settings

[**System Menu/Counter**] key > [**Report**] > [**Device Log History Settings**]

Item	Description
Device Log History	Select whether to record the device log history. **Value: Off, On** **NOTE** If [**On**] is selected, set the number of histories to be stored. The setting range is 1 to 1,000.
Auto Sending	Select whether the device log history is automatically sent to the set address when the number of entries reaches the number set in "Device Log History". **Value: Off, On** **NOTE** This function is displayed when "Device Log History" is set to [**On**].
Destination	Set the destination to which device log histories are sent. E-mail address only can be set as destination. **NOTE** This function is displayed when "Device Log History" is set to [**On**].
Subject	Set the subject automatically entered when sending device log histories by E-mail. **Value: Up to 60 characters** **NOTE** This function is displayed when "Device Log History" is set to [**On**].

NOTE

If the user authentication screen appears, enter your login user name and login password and select [**Login**]. For this, you need to login with administrator privileges. The factory default login user name and login password are set as shown below.

Model Name	Login User Name	Login Password
2552ci	2500	2500
3252ci	3200	3200
3552ci	3500	3500
4052ci	4000	4000
5052ci	5000	5000
6052ci	6000	6000

Secure Comm. Error Log

[**System Menu/Counter**] key > [**Report**] > [**Secure Comm. Error Log**]

Item	Description
Secure Comm. Error Log	Select whether to record the secure communication error log history. **Value: Off, On** **NOTE** If [**On**] is selected, set the number of histories to be stored. The setting range is 1 to 1,000.
Auto Sending	Select whether the secure communication error log history is automatically sent to the set address when the number of entries reaches the number set in "Secure Comm. Error Log". **Value: Off, On** **NOTE** This function is displayed when "Secure Communication Error Log History" is set to [**On**].
Destination	Set the destination to which secure communication error log histories are sent. E-mail address only can be set as destination. **NOTE** This function is displayed when "Secure Communication Error Log History" is set to [**On**].
Subject	Set the subject automatically entered when sending secure communication error log histories by E-mail. **Value: Up to 60 characters** **NOTE** This function is displayed when "Secure Communication Error Log History" is set to [**On**].

NOTE

If the user authentication screen appears, enter your login user name and login password and select [**Login**]. For this, you need to login with administrator privileges. The factory default login user name and login password are set as shown below.

Model Name	Login User Name	Login Password
2552ci	2500	2500
3252ci	3200	3200
3552ci	3500	3500
4052ci	4000	4000
5052ci	5000	5000
6052ci	6000	6000

System/Network

Configures machine system settings.

Network

Configures network settings.

Host Name

[**System Menu/Counter**] key > [**System/Network**] > [**Network**] > [**Host Name**]

Item	Description
Host Name	Check the host name of the machine. Host name can be changed from Command Center RX. Changing Device Information (page 2-64)

Wired Network Settings

[**System Menu/Counter**] key > [**System/Network**] > [**Network**] > [**Wired Network Settings**]

Configure wired network settings.

TCP/IP Setting

Item		Description
TCP/IP		Select whether to use TCP/IP Protocol. **Value: Off, On**
IPv4		Set up TCP/IP (IPv4) to connect to the network. This setting is available when [**TCP/IP**] is set to [**On**].
	IP Address	Set the IP address. **Value: ###.###.###.###** **NOTE** When DHCP is set to [**On**], this function will be grayed out and the value cannot be entered.
	Subnet Mask	Set the IP subnet mask. **Value: ###.###.###.###** **NOTE** When DHCP is set to [**On**], this function will be grayed out and the value cannot be entered.
	Default Gateway	Set the IP gateway address. **Value: ###.###.###.###** **NOTE** When DHCP is set to [**On**], this function will be grayed out and the value cannot be entered.
	DHCP	Select whether to use the DHCP (IPv4) server. **Value: Off, On**
	Auto-IP	Select whether to use Auto-IP. **Value: Off, On**

IMPORTANT

- **When setting the Auto-IP, enter "0.0.0.0" in [IP Address].**
- **After changing the setting, restart the network or turn the machine OFF and then ON.**

Item		Description
IPv6		Set up TCP/IP (IPv6) to connect to the network. This setting is available when [**TCP/IP**] is [**On**].
	IPv6	Select whether to use IPv6. **Value: Off, On** **NOTE** Selecting [**On**] displays IP address in [**IP Address (Link Local)**] after restarting the network.
	RA (Stateless)	Select whether to use RA (Stateless). **Value: Off, On** **NOTE** This function is displayed when [**IPv6**] is set to [**On**]. Selecting [**On**] displays IP address in [**IP Address (Stateless)**] after restarting the network.
	Manual Setting	Manually specify the IP address, prefix length, and gateway address of TCP/IP (IPv6). **Value** **IP Address (Manual): 128-bits address is expressed in eight groups consisting of four-digit hexadecimal digits. The groups are separated by colon (:).** **Prefix Length: 0 to 128** **Default Gateway: 128-bits address is expressed in eight groups consisting of four-digit hexadecimal digits. The groups are separated by colon (:).** **NOTE** This function is displayed when [**IPv6**] is set to [**On**]. To enter "Default Gateway", set [**RA (Stateless)**] to [**Off**].
	DHCP	Select whether to use the DHCP (IPv6) server. **Value: Off, On** **NOTE** This function is displayed when [**IPv6**] is set to [**On**]. Selecting [**On**] displays IP address in [**IP Address (Stateful)**] after restarting the network.

IMPORTANT

After changing the setting, restart the network or turn the machine OFF and then ON.

LAN Interface

Item	Description
LAN Interface	Specify the settings for the LAN interface to be used. **Value: Auto, 10BASE-T Half, 10BASE-T Full, 100BASE-TX Half, 100BASE-TX Full, 1000BASE-T**

IMPORTANT

After changing the setting, restart the network or turn the machine OFF and then ON.

Wi-Fi Direct Settings

[**System Menu/Counter**] key > [**System/Network**] > [**Network**] > [**Wi-Fi Direct Settings**]

Set Wi-Fi Direct.

Item	Description
Wi-Fi Direct	Select whether to use Wi-Fi Direct. **Value: Off, On**
Device Name	Specify the device name. **NOTE** • Up to 32 characters can be entered. • This function is displayed when [**Wi-Fi Direct**] is set to [**On**].
IP Address	Check the IP address of the machine. TCP/IP Setting (page 8-49) **NOTE** This function is displayed when [**Wi-Fi Direct**] is set to [**On**].
Auto Disconnect	Automatically disconnect devices connected through Wi-Fi Direct. **Value: Off, On** **NOTE** • If you select [**ON**], set the waiting time for automatic disconnection. • This function is displayed when [**Wi-Fi Direct**] is set to [**On**].

Wi-Fi Settings

[**System Menu/Counter**] key > [**System/Network**] > [**Network**] > [**Wi-Fi Settings**]

Set Wi-Fi.

Wi-Fi

Item	Description
Wi-Fi	Select whether to use Wi-Fi. **Value: Off, On**

Setup

<table>
<tr><th colspan="3">Item</th><th>Description</th></tr>
<tr><td colspan="3">Connection Status</td><td>Check the wireless LAN status.</td></tr>
<tr><td colspan="3">Quick Setup</td><td>If the machine will connect to an access point that supports the automatic wireless network setup, connection settings can be configured by Quick Setup.</td></tr>
<tr><td></td><td colspan="2">Available Network</td><td>Displays access points to which the machine can connect.</td></tr>
<tr><td></td><td></td><td>WEP Key Index</td><td>Select the key index of the access point.
Value: 0 to 3</td></tr>
<tr><td></td><td colspan="2">Push Button Method</td><td>If the access point supports the push button method, wireless settings can be configured using the push button. This setting executes push button, and the connection is started by pressing the push button on the access point.
NOTE
The push button method supports only the WPS.</td></tr>
<tr><td></td><td colspan="2">PIN Code Method (Device)</td><td>Starts connection using the machine's PIN code. Enter the PIN code into the access point. The PIN code of the machine is automatically generated.</td></tr>
<tr><td colspan="3">Custom Setup</td><td>The detailed settings for wireless LAN can be changed.</td></tr>
<tr><td></td><td colspan="2">Network Name (SSID)</td><td>Set the SSID (Service Set Identifier) of the wireless LAN to which the machine connects.
NOTE
Up to 32 characters can be entered.</td></tr>
<tr><td></td><td colspan="2">Network Authentication</td><td>Select network authentication type.
Value: Open, WPA2/WPA-PSK, WPA2-PSK, WPA2/WPA-EAP, WPA2-EAP</td></tr>
<tr><td></td><td colspan="2">Encryption</td><td>Select encryption method. The setting values vary depending on the Network Authentication setting.
<table>
<tr><th>Network Authentication</th><th colspan="2">Encryption</th></tr>
<tr><td rowspan="2">Open</td><td>Disable</td><td>—</td></tr>
<tr><td>WEP</td><td>WEP Key: Up to 26 characters
WEP Key Index: 0 to 3</td></tr>
<tr><td>WPA2/WPA-PSK</td><td colspan="2">Data Encryption: AES, Auto
Preshared Key: Up to 64 characters</td></tr>
<tr><td>WPA2-PSK</td><td colspan="2">Data Encryption: AES
Preshared Key: Up to 64 characters</td></tr>
<tr><td>WPA2/WPA-EAP</td><td colspan="2">Data Encryption: AES, Auto</td></tr>
<tr><td>WPA2-EAP</td><td colspan="2">Data Encryption: AES</td></tr>
</table></td></tr>
</table>

TCP/IP Setting

Item		Description
TCP/IP		Select whether to use TCP/IP Protocol. **Value: Off, On**
IPv4		Set up TCP/IP (IPv4) to connect to the network. This setting is available when [**TCP/IP**] is set to [**On**].
	IP Address	Set the IP address. **Value: ###.###.###.###** **NOTE** When DHCP is set to [**On**], this function will be grayed out and the value cannot be entered.
	Subnet Mask	Set the IP subnet mask. **Value: ###.###.###.###** **NOTE** When DHCP is set to [**On**], this function will be grayed out and the value cannot be entered.
	Default Gateway	Set the IP gateway address. **Value: ###.###.###.###** **NOTE** When DHCP is set to [**On**], this function will be grayed out and the value cannot be entered.
	DHCP	Select whether to use the DHCP (IPv4) server. **Value: Off, On**
	Auto-IP	Select whether to use Auto-IP. **Value: Off, On**

IMPORTANT

- **When setting the Auto-IP, enter "0.0.0.0" in [IP Address].**
- **After changing the setting, restart the network or turn the machine OFF and then ON.**

Item		Description
IPv6		Set up TCP/IP (IPv6) to connect to the network. This setting is available when [**TCP/IP**] is [**On**].
	IPv6	Select whether to use IPv6. **Value: Off, On** **NOTE** Selecting [**On**] displays IP address in [**IP Address (Link Local)**] after restarting the network.
	RA (Stateless)	Select whether to use RA (Stateless). **Value: Off, On** **NOTE** This function is displayed when [**IPv6**] is set to [**On**]. Selecting [**On**] displays IP address in [**IP Address (Stateless)**] after restarting the network.
	Manual Setting	Manually specify the IP address, prefix length, and gateway address of TCP/IP (IPv6). **Value** **IP Address (Manual): 128-bits address is expressed in eight groups consisting of four-digit hexadecimal digits. The groups are separated by colon (:).** **Prefix Length: 0 to 128** **Default Gateway: 128-bits address is expressed in eight groups consisting of four-digit hexadecimal digits. The groups are separated by colon (:).** **NOTE** This function is displayed when [**IPv6**] is set to [**On**]. To enter "Default Gateway", set [**RA (Stateless)**] to [**Off**].
	DHCP	Select whether to use the DHCP (IPv6) server. **Value: Off, On** **NOTE** This function is displayed when [**IPv6**] is set to [**On**]. Selecting [**On**] displays IP address in [**IP Address (Stateful)**] after restarting the network.

IMPORTANT

After changing the setting, restart the network or turn the machine OFF and then ON.

Restart Network

Item	Description
Restart Network	Restarts the network.

Bonjour

[**System Menu/Counter**] key > [**System/Network**] > [**Network**] > [**Bonjour**]

Item		Description
Bonjour		Select whether to use Bonjour. **Value: Off, On**
	Wi-Fi Direct	Set whether to enable this function for each network. **Value: Disable, Enable**
	Wi-Fi	
	Wired Network	

IPSec

[**System Menu/Counter**] key > [**System/Network**] > [**Network**] > [**IPSec**]

Item	Description
IPSec	Select whether to use IPSec. **Value: Off, On**

Protocol Settings

[**System Menu/Counter**] key > [**System/Network**] > [**Network**] > [**Protocol Settings**]

Configure protocol settings.

Item		Description
SMTP (E-mail TX)		Select whether to send E-mail using SMTP. **Value: Off, On**
POP3 (E-mail RX)		Select whether to receive E-mail using POP3. **Value: Off, On**
FTP Client (Transmission)		Select whether to send documents using FTP. To use the FTP Client, set the protocol to [**On**]. The default port number is 21. **Value: Off, On**
FTP Server (Reception)		Select whether to receive documents using FTP.*1 **Value: Off, On**
	Wi-Fi Direct	Set whether to enable this function for each network. **Value: Disable, Enable**
	Wi-Fi	
	Wired Network	
SMB Client (Transmission):		Select whether to send documents using SMB. To use the SMB Client, set the protocol to [**On**]. The default port number is 445. **Value: Off, On**
NetBEUI		Selects whether to receive documents using NetBEUI.*1 **Value: Off, On**
	Wi-Fi Direct	Set whether to enable this function for each network. **Value: Disable, Enable**
	Wi-Fi	
	Wired Network	

Item		Description
WSD Scan		Select whether to use WSD Scan.*1 **Value: Off, On**
	Wi-Fi Direct	Set whether to enable this function for each network. **Value: Disable, Enable**
	Wi-Fi	
	Wired Network	
WSD Print		Set whether to use our proprietary web services. WIA driver, TWAIN driver and Network FAX driver use this Enhanced WSD web service.*1 **Value: Off, On**
	Wi-Fi Direct	Set whether to enable this function for each network. **Value: Disable, Enable**
	Wi-Fi	
	Wired Network	
i-FAX		Select whether to use i-FAX. **Value: Off, On** **NOTE** This function is displayed when the optional Internet FAX Kit is activated.
DSM Scan		Select whether to use DSM scan.*1 **Value: Off, On**
ThinPrint		Select whether to use ThinPrint. To use the Thin Print protocol, set the protocol to [**On**]. The default port number is 4000.*1, *2 **Value: Off, On** **NOTE** This function is displayed only when the optional ThinPrint Option is activated.
	Wi-Fi Direct	Set whether to enable this function for each network. **Value: Disable, Enable**
	Wi-Fi	
	Wired Network	
	Thin Print over SSL	To use the Thin Print over SSL protocol, set [**Thin Print Over SSL**] and [**SSL**] to [**On**]. **Value: Off, On** **NOTE** When selecting [**On**], it also requires a certificate for SSL. The default certificate is the self-certificate of the machine. **Command Center RX User Guide**
LPD		Selects whether to receive documents using LPD.*1 **Value: Off, On**
	Wi-Fi Direct	Set whether to enable this function for each network. **Value: Disable, Enable**
	Wi-Fi	
	Wired Network	

Item		Description
Raw		Select whether to receive documents using Raw Port.*1 **Value: Off, On**
	Wi-Fi Direct	Set whether to enable this function for each network. **Value: Disable, Enable**
	Wi-Fi	
	Wired Network	
IPP		Selects whether to receive documents using IPP. To use the IPP protocol, set [**IPP**] to [**On**], and set [**SSL**] to [**Off**]. In addition, select [**Not Secure (IPP&IPPS)**] on IPP Security under Security Settings from the Command Center RX. The default port number is 631.*1 **Value: Off, On**
	Wi-Fi Direct	Set whether to enable this function for each network. **Value: Disable, Enable**
	Wi-Fi	
	Wired Network	
IPP over SSL		To use the IPP protocol, set [**IPP**] and [**SSL**] to [**On**]. The default port number is 443.*1, *2 **Value: Off, On** **NOTE** When selecting [**On**], it also requires a certificate for SSL. the default certificate is the self-certificate of the machine. **Command Center RX User Guide**
	Wi-Fi Direct	Set whether to enable this function for each network. **Value: Disable, Enable**
	Wi-Fi	
	Wired Network	
HTTP		Select whether to communicate using HTTP.*1 **Value: Off, On**
	Wi-Fi Direct	Set whether to enable this function for each network. **Value: Disable, Enable**
	Wi-Fi	
	Wired Network	
HTTPS		Select whether to communicate using HTTPS.*1, *2 **Value: Off, On**
	Wi-Fi Direct	Set whether to enable this function for each network. **Value: Disable, Enable**
	Wi-Fi	
	Wired Network	
LDAP		Select whether to use LDAP. **Value: Off, On**

Item		Description
SNMPv1/v2c		Select whether to communicate using SNMP.*1 **Value: Off, On**
	Wi-Fi Direct	Set whether to enable this function for each network. **Value: Disable, Enable**
	Wi-Fi	
	Wired Network	
SNMPv3		Select whether to communicate using SNMPv3.*1 **Value: Off, On**
	Wi-Fi Direct	Set whether to enable this function for each network. **Value: Disable, Enable**
	Wi-Fi	
	Wired Network	
Enhanced WSD		Set whether to use our proprietary web services.*1 **Value: Off, On** **NOTE** Selecting [**Off**] will disable the functionality of WIA, TWAIN, and Network FAX driver.
	Wi-Fi Direct	Set whether to enable this function for each network. **Value: Disable, Enable**
	Wi-Fi	
	Wired Network	
Enhanced WSD over SSL		Set whether to use our proprietary web services over SSL.*1, *2 **Value: Off, On** **NOTE** Selecting [**Off**] will disable the functionality of WIA, TWAIN and Network FAX drivers.
	Wi-Fi Direct	Set whether to enable this function for each network. **Value: Disable, Enable**
	Wi-Fi	
	Wired Network	
eSCL		Selects whether to receive scanned documents using eSCL.*1
	Wi-Fi Direct	Set whether to enable this function for each network. **Value: Disable, Enable**
	Wi-Fi	
	Wired Network	
eSCL over SSL		Selects whether to receive scanned documents using eSCL over SSL.*1, *2
	Wi-Fi Direct	Set whether to enable this function for each network. **Value: Disable, Enable**
	Wi-Fi	
	Wired Network	

*1 The setting will be changed after restarting the device or network.
*2 Set "SSL" to [**On**] in Security Settings.
Security Settings (page 8-59)

IMPORTANT
After changing the setting, restart the network or turn the machine OFF and then ON.

Security Settings

[**System Menu/Counter**] key > [**System/Network**] > [**Network**] > [**Security Settings**]

Item	Description
SSL	Select whether to use SSL for communication. **Value: Off, On**

Proxy

[**System Menu/Counter**] key > [**System/Network**] > [**Network**] > [**Proxy**]

Item		Description
Proxy		Set the proxy for connection to the Internet from an application. **Value: Off, On**
	Use the Same Proxy Server for All Protocols	Set whether the same proxy server is used for all protocols. To use the same proxy server, select the [**Use the Same Proxy Server for All Protocols**] checkbox.
	Proxy Server (HTTP)	Set a proxy server (HTTP). **Value: (Enter the proxy address and port number.)**
	Proxy Server (HTTPS)	Set a proxy server (HTTPS). This setup is available when "Use the Same Proxy Server for All Protocols" is [**Off**]. **Value: (Enter the proxy address and port number.)**
	Do Not Use Proxy for Following Domains	Set domains for which no proxy is used. **Value: (Enter the domain name.)**

Ping

[**System Menu/Counter**] key > [**System/Network**] > [**Network**] > [**Ping**]

Item	Description
Ping	Checks if communication with the destination by entering the host name or IP address of the destination is possible. **NOTE** If [**Primary Network (Client)**] is set to [**Others**], this item is not displayed.

Restart Network

[**System Menu/Counter**] key > [**System/Network**] > [**Network**] > [**Restart Network**]

Item	Description
Restart Network	Restarts the network.

Optional Network

[**System Menu/Counter**] key > [**System/Network**] > [**Optional Network**]

Basic

Configure settings for the optional Network Interface Kit.

NOTE

This menu is displayed when the optional Network Interface Kit or Wireless Network Interface Kit is installed.

Item	Description
Host Name	Check the host name of the machine. Host name can be changed from Command Center RX. ➡ Changing Device Information (page 2-64)
TCP/IP Setting	For details on setting value. ➡ TCP/IP Setting (page 8-49) ➡ Bonjour (page 8-55) ➡ IPSec (page 8-55)
NetWare	Use NetWare to receive documents. See the Operation Guide for the optional network interface card for details. **Value: Off, On**
AppleTalk	Selects whether to receive documents using AppleTalk.*1 **Value: Off, On**
LAN Interface	Select the LAN Interface type.*1 **Value: Auto, 10Base-Half, 10Base-Full, 100Base-Half, 100Base-Full, 1000BASE-T** **NOTE** This function is displayed when the optional Network Interface Kit is installed.
MAC Address Filter	Select whether to use MAC Address Filter. ➡ **Operation Guide** for the optional Network Interface Kit **Value: Off, On**
Restart Network	Restarts the network card of the device.

*1 The setting will be changed after restarting the device or network.

Wireless Network

Configure settings for the optional Wireless Network Interface Kit.

NOTE

This function is displayed when the Wireless Network Interface Kit (IB-51) is installed.

Item		Description
Connection Status		You can check the wireless LAN status.
Quick Setup		If the machine will connect to an access point that supports the automatic wireless network setup, connection settings can be configured by Quick Setup.
	Available Network	Select access points to which the machine can be connected, enter the Preshared Key and start a connection.
	Push Button Method	If the access point supports the push button method, wireless settings can be configured using the push button. This setting executes push button, and the connection is started by pressing the push button on the access point. **NOTE** The push button method supports only the WPS.
	PIN Code Method (Device)	Starts connection using the machine's PIN code. Enter the PIN code into the access point. The PIN code of the machine is automatically generated.
	PIN Code Method (Terminal)	Starts connection using the PIN code of the access point. Enter the PIN code of the access point.

Item		Description
Custom Setup		The detailed settings for wireless LAN can be changed.
	Network Name (SSID)	Set the SSID (Service Set Identifier) of the wireless LAN to which the machine connects. **NOTE** Up to 32 characters can be entered.
	Connection Mode	Set the connection mode. **Value: Ad Hoc, Infrastructure** **NOTE** **Ad Hoc**: Directly communicates with the device without going through an access point. This method cannot be used to connect to two or more devices. **Infrastructure**: Performs communication through an access point.
	Channel	Set channel. Use [-] / [+] or the numeric keys to enter a number. **Value: 1 to 11**
	Network Authentication	Select network authentication type. To select other options, open the device home page from a computer. **Value: Open, Shared, WPA-PSK*1, WPA2-PSK*1**
	Encryption	Select encryption method. If the option other than [**Disable**] is selected, enter the WEP key or the Preshared key. The setting values vary depending on the Network Authentication setting. Select [**Data Encryption**]. **When Network Authentication is set to [Open] or [Shared]:** **Value: Disable, WEP** **When Network Authentication is set to [WPA-PSK] or [WPA2-PSK]:** **Value: TKIP*2, AES, Auto*2, Preshared Key** **NOTE** • If [**WEP**] is selected, enter the WEP key. Up to 26 characters can be entered. • If [**TKIP**], [**AES**] or [**Auto**] is selected, enter the Preshared key. Enter the value in 8 to 64 characters.

*1 Not displayed if you selected [**Ad Hoc**] for "Connection Mode".
*2 Not displayed if you selected [**WPA2-PSK**] for "Network Authentication".

Primary Network (Client)

[**System Menu/Counter**] key > [**System/Network**] > [**Primary Network (Client)**]

Item	Description
Primary Network (Client)	Select the network interface to be used for the send function that this machine functions as a client, the network authentication and connecting to external address book. **Value: Wi-Fi, Wired Network, Optional Network** **NOTE** • [**Optional Network**] is displayed when the optional Network Interface Kit (IB-50) or Wireless Network Interface Kit (IB-51) is installed. • When you select [**Optional Network**], you can send an E-mail using both optional network interface (IB-50 or IB-51) and wired network interface.

Security Level

[**System Menu/Counter**] key > [**System/Network**] > [**Security Level**]

Item	Description
Security Level	Specify the security level. **Value** **Low:** **This mode is used during maintenance. Do not use normally.** **High:** **This is the security setting we recommend. Use this setting normally.** **Very High:** **In addition to [High] setting, this setting disables the machine settings to be changed from external command.** **NOTE** This function is available when you have logged in as machine administrator. Adding a User (Local User List) (page 9-8)

Interface Block Setting

[**System Menu/Counter**] key > [**System/Network**] > [**Interface Block Setting**]

This allows you to protect this machine by blocking the interface with external devices such as USB hosts or optional interfaces.

Item	Description
USB Host	This locks and protects the USB port (USB host). **Value: Unblock, Block**
USB Device	This locks and protects the USB interface connector (USB Device). **Value: Unblock, Block**
USB Storage	This locks and protects the USB memory slot. **Value: Unblock, Block** **NOTE** This function is available when USB Host is set to [**Unblock**].
Optional Interface 1 **Optional Interface 2**	This locks and protects the optional interface slots. **Value: Unblock, Block** **NOTE** You can set this feature for each slot.

IMPORTANT

After changing the setting, restart the network or turn the machine OFF and then ON.

Data Security

[**System Menu/Counter**] key > [**System/Network**] > [**Data Security**]

Configure settings for data stored in the SSD, hard disk, and machine's memory.

Item		Description
Hard Disk/SSD Initialization		Change security functions. **NOTE** • This function is displayed when the optional Data Security Kit is activated. • Enter the security password to change security functions.
	Data Overwrite Method	The method used to overwrite data can be changed. Refer to the following for details. **Data Security Kit (E) Operation Guide** **Value** **Once Overwrite: This function overwrites unneeded data areas (in the case of overwriting) or all areas (in the case of system initialization) with zeroes to prevent data restoration.** **3-time Overwrite (DoD): This overwrite method complies with U.S. Department of Defense (DoD) standards, and overwrites unneeded data areas of the hard disk (in the case of overwriting) or all areas (in the case of system initialization) with specific characters, their complements, and random characters to prevent data restoration. Data restoration is not possible even when sophisticated restoration techniques are used, and a higher level of security than Once Overwrite is obtained.** **NOTE** This method may take more time than Once Overwrite method to process a larger amount of data.
	Security Password	Customize the security password so that only the administrator can use the security kit. Enter a new security password 6 to 16 alphanumeric characters and symbols. Enter the password again for confirmation. **IMPORTANT** **Avoid any easy-to-guess numbers for the security password (e.g. 11111111 or 12345678).**
	System Initialization	Overwrite all the data stored in the hard disk/SSD when disposing of the machine. **IMPORTANT** **If you accidentally turn the power switch off during initialization, the hard disk/SSD might possibly crash or initialization might fail.** **NOTE** If you accidentally turn the power switch off during initialization, turn the power switch on again. Initialization automatically restarts.

Item	Description
Data Sanitization	Return the following information registered in the machine to the factory defaults. • Address Book • Favorites • System settings • Fax transmission and reception / forwarding data • Transmission histories • Data saved in Custom Box • Optional applications **NOTE** • Print the status page and then confirm that security data is deleted. ➔ Status Page (page 8-43) • Once in progress, the processing cannot canceled. • Before executing this function, disconnect modular, network, and other cables. • Do not turn off the main power switch while sanitizing the data. If the main power is turned off during data erasing, erasing will be executed automatically when the power is restored, however, complete erasure cannot be guaranteed.
Software Verification	Verify the installed software. Select [**Start**] to start verification. If an error occurs during software verification, contact your dealer or service representative.

Information erased

Category	Data erased
Devices/jobs	• Job settings configured by users • Network settings • Image data saved in Document Box, etc. • Data registered in One Touch keys • Job histories • User information (user list, address book, Document Box registered by the user, etc.) • Account information of job accounting • Network certificates • Initial screen on machine changed by service representative
FAX*1	• Fax settings configured by users • Communication restriction settings • Encryption key settings • Transmission histories • Scheduled jobs • Conditional reception/forwarding settings
Application/program	• Application/program added by a user or service representative • Trial functions

*1 Only when the optional fax kit is installed.

Optional Function

[**System Menu/Counter**] key > [**System/Network**] > [**Optional Function**]

Item	Description
Optional Function	You can use the optional applications installed on this machine. Optional Applications (page 11-8)

Bluetooth Settings

[**System Menu/Counter**] key > [**System/Network**] > [**Bluetooth Settings**]

Item	Description
Bluetooth Keyboard	Use Bluetooth keyboard. **Value: Off, On**
Search Device	Select a keyboard.

Restart Entire Device

[**System Menu/Counter**] key > [**System/Network**] > [**Restart Entire Device**]

Item	Description
Restart Entire Device	Restart the CPU without turning the main power switch off. Use this to deal with any unstable operation by the machine. (Same as the computer restart.)

NFC

[**System Menu/Counter**] key > [**System/Network**] > [**NFC**]

Item	Description
NFC	Use NFC (Near Field Communication). **Value: Off, On**

Edit Destination

Address Book

[**System Menu/Counter**] key > [**Edit Destination**] > [**Address Book**]

Configure settings for address book.

Adding a Destination (Address Book) (page 3-30)

One Touch Key

[**System Menu/Counter**] key > [**Edit Destination**] > [**One Touch Key**]

Configure settings for One Touch Key.

Adding a Destination on One Touch Key (One Touch Key) (page 3-37)

Print list

[**System Menu/Counter**] key > [**Edit Destination**] > [**Print list**]

FAX Operation Guide

Address Book Defaults

[**System Menu/Counter**] key > [**Edit Destination**] > [**Address Book Defaults**]

Item	Description
Sort	Select the default sort setting of the address for the address book. **Value: No., Name**
Narrow Down	This procedure can be used to filter (narrow down) the types of destination listed when the address book is displayed. **Value: Off, E-mail, Folder, FAX*1, i-FAX*2, Group**
Address Book Type*3	Select whether the machine's address book or the External Address Book appears when the address book is displayed. **Value: Machine Address Book, Ext Address Book**

*1 Displayed only when the optional fax kit is installed.
*2 This function is displayed when the optional Internet FAX Kit is activated.
*3 This display appears only if the external address book is available.

Edit Restriction

[**System Menu/Counter**] key > [**Edit Destination**] > [**Edit Restriction**]

Item	Description
Address Book	Restrict editing of the address book. If you selected [**Administrator Only**], you can only edit the Address Book by logging in with administrator privileges. **Value: Off, Administrator Only**
One-Touch Key	Restrict editing of the One Touch Key. If you selected [**Administrator Only**], you can only edit the One Touch Key by logging in with administrator privileges. **Value: Off, Administrator Only**

User Login/Job Accounting

[**System Menu/Counter**] key > [**User Login/Job Accounting**]

Configure settings related to machine management.

- Overview of User Login Administration (page 9-2)
- Overview of Job Accounting (page 9-34)
- Unknown ID Job (page 9-55)

User Property

[**System Menu/Counter**] key > [**User Property**]

Allows you to view information about logged in users and edit some of that information.

- Enabling User Login Administration (page 9-3)

Date/Timer/Energy Saver

[**System Menu/Counter**] key > [**Date/Timer/Energy Saver**]

Configures settings related to the date and time.

Item	Description
Date/Time	Set the date and time for the location where you use the machine. If you perform Send as E-mail, the date and time set here will be displayed on the header. **Value: Year (2000 to 2037), Month (1 to 12), Day (1 to 31), Hour (00 to 23), Minute (00 to 59), Second (00 to 59)** **NOTE** If you change the date/time while using the trial version of an application, you will no longer be able to use the application.
Date Format	Select the display format of year, month, and date. The year is displayed in Western notation. **Value: MM/DD/YYYY, DD/MM/YYYY, YYYY/MM/DD**
Time Zone	Set the time difference from GMT. Choose the nearest listed location from the list. If you select a region that utilizes summer time, configure settings for summer time. Setting Date and Time (page 2-29)
Auto Panel Reset	If no jobs are run for a certain period of time, automatically reset settings and return to the default setting. Select to use Auto Panel Reset or not. **Value: Off, On** **NOTE** For setting the time until the panel is automatically reset, refer to the following: Panel Reset Timer (page 8-69)
Auto Error Clear	If an error occurs during processing, processing stops to wait for the next step to be taken by the user. In the Auto Error Clear mode, automatically clear the error after a set amount of time elapses. **Value: Off, On** **NOTE** For setting the automatic error recovery time, refer to the following: Error Clear Timer (page 8-69)

Item	Description
Low Power Timer	Set amount of time before entering the Low Power mode. **Value** **For Europe: 1 to 120 minutes (1 minute increments)** **Except for Europe: 1 to 240 minutes (1 minute increments)** Low Power Mode (page 2-39)
Panel Reset Timer	If you select [**On**] for Auto Panel Reset, set the amount of time to wait before Auto Panel Reset. **Value: 5 to 495 seconds (in 5 second increments)** **NOTE** This function is displayed when [**Auto Panel Reset**] is set to [**On**].
Sleep Timer	Set amount of time before entering Sleep. **Value** **For Europe** **2552ci: 1 to 60 minutes (1 minute increments)** **3252ci/4052ci/5052ci/6052ci: 1 to 120 minutes (1 minute increments)** **Except for Europe** **1 to 240 minutes (1 minute increments)**
Interrupt Clear Timer	Set the period after which the machine reverts to Normal mode when it has been set to Interrupt Copy mode and then left unused. **Value: 5 to 495 seconds (in 5 second increments)**
Error Job Skip	Set whether a job for which a "Add paper in cassette #" or "Add paper in Multi Purpose tray" error occurred when the job was started is automatically skipped after a set period of time elapses. **Value: Off, On** **NOTE** • When a job is skipped, it is moved to the end of the job queue. • If [**On**] is selected, set the time until the job is skipped. The setting range is 5 to 90 (5 second increments).
Error Clear Timer	If you select [**On**] for Auto Error Clear, set the amount of time to wait before automatically clearing errors. **Value: 5 to 495 seconds (in 5 second increments)** **NOTE** This function is displayed when [**Auto Error Clear**] is set to [**On**].
Unusable Time[*2]	Set a time period during which the machine will not print received faxes. **FAX Operation Guide**.

Item	Description
Sleep Rules (models for Europe)	Select whether to use the Sleep mode for the following functions individually: • Network • USB Cable • ID Card Reader*1 • FAX*2 • Application **Value: Off, On** **NOTE** • If the sleep condition is not turned off, the machine will not wake from sleep mode even if it receives a print job from a computer connected by USB cable. Also, the ID card cannot be recognized. • This function will not be displayed when the optional Network Interface Kit or Fiery controller is installed.
Sleep Level (models except for Europe)	Select the sleep level. Set the Energy Saver mode to reduce power consumption even more than normal Sleep mode. **Value: Quick Recovery, Energy Saver** **NOTE** This function will not be displayed when the optional Network Interface Kit or Fiery controller is installed.
Sleep Rules	Select whether to use the Energy Saver mode for the following functions individually: • Network • USB Cable • ID Card Reader*1 • FAX*2 • Application **Value: Off, On** **NOTE** When the machine has entered sleep mode with Energy Saver setting, it does not wake from sleep mode when it receives print data from a PC connected by USB cable. Also, the ID card cannot be recognized.
EnergySaver RecoveryLevel	Select the method of recovery from energy saver. **Value:** **Full Recovery: This mode enables the use of all functions immediately. However, this mode saves less energy.** **Normal Recovery: In this mode, you can select the method from the following: enabling the use of all functions immediately or enabling the use of desired functions only. If you want to use all functions immediately, select the [Energy Saver] key to execute recovery.** **Power Saving Recovery: This mode enables the use of desired functions only. This mode saves energy most effectively.**

Item		Description
Weekly Timer Settings		Configure settings for switching the machine to OFF and waking it automatically at a specified time for each day of the week.
	Weekly Timer	Select whether to use Weekly Timer. **Value: Off, On**
	Schedule	Specify the time for each day of the week at which the machine turns OFF.
	Retry Times	Set the number of retries for turning OFF this machine. **Value: Limited Retries, Unlimited Retries** **NOTE** If [**Limited Retries**] is selected, set the number of retry. The setting range is 0 to 10. Retry is not performed when "0" is set. If [**Unlimited Retries**] is selected, retry is performed until the machine turns OFF.
	Retry Interval	Set the retry interval. Use [**-**] / [**+**] to enter a number. **Value: 10 to 60 seconds (increments of 10 seconds)**
Power Off Rule (models for Europe)		Select whether or not the machine enters Power Off mode for the following function. Select [**On**] to set the Power Off mode. • Network • FAX*2 • USB Cable • USB Host • NIC*3 • Remote Diagnostics • Application **Value: Off, On** **NOTE** Even when any of the functions is set to [**On**], if either [**FAX**] or [**NIC**] is set to [**Off**], the machine does not enter Power Off Mode. Even when [**Network**] or [**USB Cable**] is set to [**Off**], if the machine does not communicate with the other devices, the machine will enter Power Off Mode.
Power Off Timer (models for Europe)		Select whether to turn off the power automatically after a period of inactivity. **Value: 1 hour, 2 hours, 3 hours, 4 hours, 5 hours, 6 hours, 9 hours, 12 hours, 1 day, 2 days, 3 days, 4 days, 5 days, 6 days, 1 week**
Ping Timeout		Set the time until timeout occurs when [**Ping**] is executed in "System/Network". **Value: 1 to 30 seconds (in 1 second increments)**

*1 Displayed when the optional Card Authentication Kit is activated.
*2 Displayed only when the optional FAX Kit is installed.
*3 Displayed when the optional Network Interface Kit or Wireless Network Interface Kit is installed.

Adjustment/Maintenance

[**System Menu/Counter**] key > [**Adjustment/Maintenance**]

Adjust printing quality and conduct machine maintenance.

Item			Description
Density Adjustment			Adjust density.
	Copy		Adjust copy density. Adjustment can be made in 7 levels. **Value: -3 (Lighter), -2, -1, 0 (Normal), +1, +2, +3 (Darker)**
	Send/Box		Adjust scan density when sending or storing the data in Document Box. Adjustment can be made in 7 levels. **Value: -3 (Lighter), -2, -1, 0 (Normal), +1, +2, +3 (Darker)**
	FAX*1		**FAX Operation Guide**
Background Density Adj.			Darkens or lightens overall background density adjustment.
	Copy (Auto)		Darkens or lightens overall background density adjustment during copying. Adjustment can be made in 7 levels. **Value: -3 (Lighter), -2, -1, 0 (Normal), +1, +2, +3 (Darker)**
	Send/Box (Auto)		Darkens or lightens overall background density when sending images or storing them in the Document Box. Adjustment can be made in 7 levels. **Value: -3 (Lighter), -2, -1, 0 (Normal), +1, +2, +3 (Darker)**
Sharpness Adjustment			Adjust the sharpness of the image outline.
	Copy	**All**	Sharpen or blur overall image outlines during copying. Adjustment can be made in 7 levels. **Value: -3 (Blur), -2, -1, 0, +1, +2, +3 (Sharpen)**
		Text/Fine Line	Sharpen text/fine line during copying. Adjustment can be made in 4 levels. **Value: 0 (Normal), 1, 2, 3 (Sharpen)**
	Send/Box	**All**	Sharpen or blur overall image outlines when sending or storing them in the Document Box. Adjustment can be made in 7 levels. **Value: -3 (Blur), -2, -1, 0, +1, +2, +3 (Sharpen)**
		Text/Fine Line	Adjust sharpness of the text/fine line when during sending or storing them in the Document Box. Adjustment can be made in 4 levels. **Value: 0 (Normal), 1, 2, 3 (Sharpen)**
Drum Heater			Set the drum heater. **Value: Off, On** **NOTE** This setting does not appear in some regions.
Drum Refresh			Remove image blur and white dots from the printout. It takes about 1 to 2 minutes. The time required may vary depending on the operating environment. Drum Refresh (page 10-55) **NOTE** Drum Refresh cannot be performed while printing. Execute Drum Refresh after the printing is done.

Item	Description
Correcting Black Lines	Correct fine lines (streaks caused by contamination), which may appear on the image, when the document processor is used. **Value** **Off: No correction performed.** **On (Low): Correction performed. The reproduction of fine lines on the original may become lighter than when using [Off].** **On (High): Select this item if a streak remains after using [On (Low)]. The reproduction of fine lines on the original may become lighter than when using [On (Low)].**
System Initialization	Initialize the hard disk installed on the machine to return it to the factory defaults. **NOTE** This function will not be displayed when the optional Data Security Kit is activated.
Display Brightness	Set the brightness of the touch panel. **Value: 1 (Darker), 2, 3, 4, 5 (Lighter)**
Silent Mode	Set the Silent Mode. Select this mode when the running noise is uncomfortable. **Value: Off, On** **NOTE** When [**On**] is selected, it may take time for the next print job to start.
Memory Diagnostics	Perform this function to check the machine memory.
Auto Color Correction	This setting allows you to adjust the detection level used by the machine to determine whether the original is color or black and white in Auto Color Selection Mode. Setting a lower value will result in more originals being identified as color, while a larger value will tend to increase the number of originals being identified as black and white. **Value: 1 (Color), 2, 3, 4, 5 (B & W)**
Color Registration	When first installing the machine or moving it to a new location, color drift during printing may occur. Use this function to correct the color position of each of cyan, magenta and yellow to resolve color drift. Color Registration Procedure (page 10-50)
Calibration Cycle	Set the calibration cycle. **Value:** **Auto: Automatically sets the cycle for calibration.** **Short: Priority is given to image quality.** **Standard: Balances image quality and print speed.** **Long: Priority is given to print speed.** **NOTE** When [**Custom**] is displayed as setting item, the setting cannot be changed.
Tone Curve Adjustment	After prolonged use, or from the effects of surrounding temperature or humidity, the printed output tone may differ from the original. Perform this function to ensure consistency with the original tone. Tone Curve Adjustment (page 10-54)

Item	Description
Calibration	Calibrate the device to ensure correct toner overlapping and consistency with the original tone. Calibration (page 10-55) **NOTE** Perform Color Registration when correct toner overlapping is not ensured even after performing Calibration, and perform Tone Curve Adjustment if consistency with the original tone is not ensured.
Developer Refresh	Adjust the printed image that is too light or incomplete, even though there is enough toner. Developer Refresh (page 10-56) **NOTE** Waiting time may be longer when the toner is refilled during developer refresh.
Laser Scanner Cleaning	Remove vertical white lines from the printout. Laser Scanner Cleaning (page 10-56)
Contrast	You can increase or decrease the overall contrast.
Copy	Increases or decreases the overall contrast of copies. **Value: -3 (Lower), -2, -1, 0 (Normal), +1, +2, +3 (Higher)**
Send/Box	Increases or decreases the overall contrast when documents are sent or saved in a document box. **Value: -3 (Lower), -2, -1, 0 (Normal), +1, +2, +3 (Higher)**
Auto Drum Refresh	Select the time length of the drum refresh. **Value** **Off: The Auto Drum Refresh will not be performed.** **Short: Perform Auto Drum Refresh as Short.** **Standard: Perform Auto Drum Refresh as Standard.** **Long: Perform Auto Drum Refresh as Long.** **NOTE** [**Off**] is not displayed on the 2552ci and 3252ci.
Open toner cover	Open the toner cover. **NOTE** This function is displayed when using a genuine toner container.

*1 Displayed only when the optional FAX Kit is installed.

Internet

[**System Menu/Counter**] key > [**Internet**]

Configure settings related to the internet.

Item	Description
Internet Browser	Select whether to use the Internet browser. **Value: Off, On**
Browser Environment	This specifies Internet browser preferences such as your home page setting and how pages are displayed. **Value:** **Home page: (Enter the address for Home page.)** **Text Size: Large, Medium, Small** **Display Mode: Normal, Just-Fit Rendering, Smart-Fit Rendering** **Cookie: Accept All, Reject All, Prompt before Accepting** Internet Browser (page 8-75)

NOTE

To use proxy from Internet Browser, refer to the following:

Proxy (page 8-59)

Application

[**System Menu/Counter**] key > [**Application**]

Configure settings for Application.

Application (page 5-14)

9 User Authentication and Accounting (User Login, Job Accounting)

This chapter explains the following topics:

Overview of User Login Administration 9-2
Managing the Job Account from PC ... 9-2
Managing the Users to Use TWAIN for Scanning 9-2
Managing the Users to Use WIA for Scanning 9-2
Managing the Users to Send Faxes from a PC 9-2
Enabling User Login Administration 9-3
Setting User Login Administration 9-5
Authentication Security 9-5
Adding a User (Local User List) 9-8
Changing User Properties 9-12
User Login Administration for Printing ... 9-15
Managing the Users to Scan Using TWAIN 9-16
Managing the Users to Scan Using WIA 9-17
Managing the Users that Send Faxes from a PC 9-18
Local Authorization 9-19
Group Authorization Settings 9-20
Guest Authorization Set. 9-23
Obtain NW User Property 9-26
Simple Login Settings 9-28
ID Card Settings 9-31
PIN Code Authorization 9-32
Using User Login Administration 9-33
Login/Logout 9-33
Overview of Job Accounting 9-34
To Manage the Number of Sheets Used on Jobs Printed from a PC 9-34
Managing the Scan Job Account by Using TWAIN 9-34
Managing the Scan Job Account by Using WIA 9-34
Managing the FAX Job Transmitted from a PC 9-34
Enabling Job Accounting 9-35
Job Accounting Access 9-36
Job Accounting (Local) 9-37
Adding an Account 9-37
Restricting the Use of the Machine ... 9-39
Editing an Account 9-40
Deleting an Account 9-41
Job Accounting for Printing 9-42
Job Accounting for Scan Using TWAIN 9-43
Job Accounting for Scan Using WIA 9-44
Job Accounting for the FAX Transmitted from a Computer 9-45
Configuring Job Accounting 9-46
Default Setting 9-46
Counting the Number of Pages Printed 9-49
Print Accounting Report 9-51
Using Job Accounting 9-52
Login/Logout 9-52
Apply Limit 9-53
Copy/Printer Count 9-54
Unknown ID Job 9-55
Unknown ID Job 9-55
Registering Information for a User whose ID is Unknown 9-56

Overview of User Login Administration

User login administration specifies how the user access is administered on this machine. Enter a correct login user name and password for user authentication to login.

1 Enable User Login Administration (page 9-3)

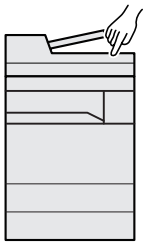

2 Set the user (page 9-8)

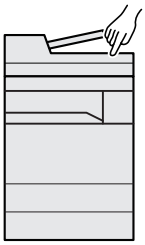

3 Enter the login user name and password and execute the job (page 9-33)

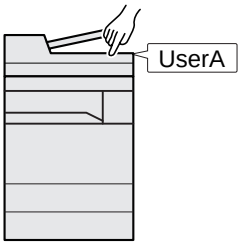

Access are in three levels - "User", "Administrator", and "Machine Administrator". The security levels can be modified only by the "Machine Administrator".

Managing the Job Account from PC

In addition to the above settings, the following are necessary to manage the job account from PC.

To Manage the Users to Print from PCs

Printer driver settings are necessary to manage the users that print on the machine from PCs.

1 Set the User Login Administration on the printer driver (page 9-15)

2 Print

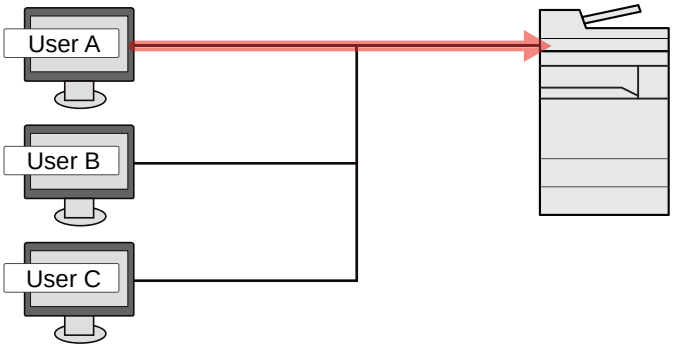

Managing the Users to Use TWAIN for Scanning

TWAIN driver settings on the PC are necessary to manage the users that use TWAIN for scanning.

Managing the Users to Scan Using TWAIN (page 9-16)

Managing the Users to Use WIA for Scanning

WIA driver settings on the PC are necessary to manage the users that use WIA for scanning.

Managing the Users to Scan Using WIA (page 9-17)

Managing the Users to Send Faxes from a PC

FAX driver settings on the PC are necessary to manage the users that send faxes from a PC.

Managing the Users that Send Faxes from a PC (page 9-18)

The optional FAX Kit is required in order to make use of fax functionality.

Enabling User Login Administration

This enables user login administration. Select one of the following authentication methods:

Item	Descriptions
Local Authentication	User authentication based on user properties on the local user list stored in the machine.
Network Authentication	User authentication based on Authentication Server. Use a user property stored in Authentication Server to access the network authentication login page.

1 Display the screen.

1 [**System Menu/Counter**] key > [**User Login/Job Accounting**]

NOTE

If the login user name entry screen appears during operations, enter a login user name and password, and select [**Login**]. For this, you need to login with administrator privileges.

The factory default login user name and login password are set as shown below.

Model Name	Login User Name	Login Password
2552ci	2500	2500
3252ci	3200	3200
3552ci	3500	3500
4052ci	4000	4000
5052ci	5000	5000
6052ci	6000	6000

2 "User Login Setting" [**Next**] > "User Login" [**Change**]

2 Configure the settings.

1 Select [**Local Authentication**] or [**Network Authentication**].

Select [**Off**] to disable user login administration.

If you select [**Network Authentication**], enter the host name (64 characters or less) and domain name (256 characters or less) for the Authentication Server. Select [**NTLM**], [**Kerberos**] or [**Ext.**] as the server type.

When selecting [**Ext.**] as the server type, enter the port number.

NOTE

Selecting "Domain" [**Add/Edit**] displays the domain registration list. In the domain registration list screen, select [**Add/Edit**], and enter the domain name. Up to 10 domain names can be registered.

2 Select [**OK**].

"Do you want to add a new function to the home screen?" appears when [**OK**] is selected.

To add a new function, select [**Yes**]. The selection screen for functions displayed in the home screen will appear.

Available Functions to Display on Desktop (page 2-16)

NOTE

If the login user name and password are rejected, check the following settings.

- Network Authentication setting of the machine
- User property of the Authentication Server
- Date and time setting of the machine and the Authentication Server

If you cannot login because of the setting of the machine, login with any administrator registered in the local user list and correct the settings.

Setting User Login Administration

This registers, alters and deletes users and configures the settings for User Login Administration.

Authentication Security

If user authentication is enabled, configure the user authentication settings.

User Account Lockout Setting

You can prohibit the use of a user account if an incorrect password is entered repeatedly to login with that account.

1 Display the screen.

1 [**System Menu/Counter**] key > [**User Login/Job Accounting**]

NOTE

If the login user name entry screen appears during operations, enter a login user name and password, and select [**Login**]. For this, you need to login with administrator privileges.

The factory default login user name and login password are set as shown below.

Model Name	Login User Name	Login Password
2552ci	2500	2500
3252ci	3200	3200
3552ci	3500	3500
4052ci	4000	4000
5052ci	5000	5000
6052ci	6000	6000

2 "User Login Setting" [**Next**] > "Authentication Security" [**Next**] > "User Account Lockout Set" [**Next**]

2 Configure the settings.

The following settings can be selected.

Item	Descriptions
Lockout	Select whether or not account lockout policy is enabled. **Value: Off, On**
Lockout Policy	Specify the conditions and the extent to which the account lockout is applied. **Value** **Number of Retries until Locked:** **Specify how many login retries are allowed until the account is locked out. (1 to 10 times)** **Lockout Duration:** **Specify how long the account is to be locked out until it is unlocked. (1 to 60 minutes)** **Lockout Target:** **Specify the extent to which the account lockout is applied. You can select from [All] or [Remote Login Only]. Remote Login Only locks out all operations from outside the operation panel.**
Locked out Users List	Displays a list of locked out users. You can unlock a user by selecting the user in the list, and selecting [**Unlock**]. **NOTE** This function is displayed when account lockout policy is enabled.

Password Policy Settings

You can prohibit the setting and use of passwords that do not comply with the password policy.

Setting the Password Policy makes it more difficult to break the password.

1 Display the screen.

1 [**System Menu/Counter**] key > [**User Login/Job Accounting**]

NOTE

If the login user name entry screen appears during operations, enter a login user name and password, and select [**Login**]. For this, you need to login with administrator privileges.

The factory default login user name and login password are set as shown below.

Model Name	Login User Name	Login Password
2552ci	2500	2500
3252ci	3200	3200
3552ci	3500	3500
4052ci	4000	4000
5052ci	5000	5000
6052ci	6000	6000

2 "User Login Setting" [**Next**] > "Authentication Security" [**Next**] > "Password Policy Settings" [**Next**]

2 Configure the settings.

The following settings can be selected.

Item	Descriptions
Password Policy	Select whether or not password policy is enabled. **Value: Off, On**
Minimum password length	Set the minimum password length of characters for password. **Value: Off, On (1 to 64 characters)**
Password complexity	Set the password complexity. **Value** **No more than two consecutive identical char: Off, On** **At least one uppercase letter (A-Z): Off, On** **At least one lowercase letter (a-z): Off, On** **At least one number (0-9): Off, On** **At least one symbol: Off, On**
Maximum password age	Set the maximum password age. **Value: Off, On (1 to 180 days)**
Policy Violated User List	List of users do not meet password policy requirements.

Adding a User (Local User List)

You can add up to 1,000 users (including the default login user name).

NOTE

By default, one of each default user with machine administrator rights and administrator privileges is already stored. Each user's properties are:

Machine Administrator

User Name: DeviceAdmin

Login User Name: 2552ci: 2500, 3252ci: 3200, 4052ci: 4000, 5052ci: 5000, 6052ci: 6000

Login Password: 2552ci: 2500, 3252ci: 3200, 4052ci: 4000, 5052ci: 5000, 6052ci: 6000

Access Level: Machine Administrator

Administrator

User Name: Admin

Login User Name: Admin

Login Password: Admin

Access Level: Administrator

* Upper case and lower case letters are distinguished (case sensitive).

It is recommended to periodically change the user name, login user name and login password regularly for your security.

1 Display the screen.

1 [**System Menu/Counter**] key > [**User Login/Job Accounting**]

NOTE

If the login user name entry screen appears during operations, enter a login user name and password, and select [**Login**]. For this, you need to login with administrator privileges.

The factory default login user name and login password are set as shown below.

Model Name	Login User Name	Login Password
2552ci	2500	2500
3252ci	3200	3200
3552ci	3500	3500
4052ci	4000	4000
5052ci	5000	5000
6052ci	6000	6000

2 "User Login Setting" [**Next**] > "Local User List" [**Add/Edit**]

2 Enter the user information.

[**Add**] > Enter the user information > [**OK**]

Item	Descriptions
User Name	Enter the name displayed on the user list (up to 32 characters).
Login User Name	Enter the login user name to login (up to 64 characters). The same login user name cannot be registered.
Login Password	Enter the password to login (up to 64 characters). Reenter the same password for confirmation and select the [**OK**] key.
Access Level	Select "Administrator" or "User" for user access privileges.
Account Name	Add an account where the user belongs. The user, who registered his/her account name, can login without entering the account ID. Overview of Job Accounting (page 9-34) **NOTE** • Select [**Name**] or [**ID**] from the "Sort" to sort the account list. • Select [**Search(Name)**] or [**Search(ID)**] to search by account name or account ID.
E-mail Address	The user can register his/her E-mail address. The registered address will be automatically selected for subsequent operations that need any E-mail function.
ID Card Information	Register ID card information. Place the ID card on the ID card reader, and select [**Read**]. **NOTE** This function is displayed when the optional ID Card Authentication Kit is activated. Optional Applications (page 11-8)

Item	Descriptions
Local Authorization*1	Set usage authority for each user. Local Authorization must be enabled. Local Authorization (page 9-19) The following restriction items are available: **Print Restriction:** Select whether or not use of the print function of the printer is prohibited. **Print Restriction (Color):** Select whether or not use of the print function (color) of the printer is prohibited. **Copy Restriction:** Select whether or not use of the copy print function is prohibited. **Copy Restriction (Color):** Select whether or not use of the copy print function (color) is prohibited. **Copy Restr. (Full Color):** Select whether or not use of the copy print function (full color) is prohibited. **Duplex Restriction:** Select whether only duplex printing is allowed. **Combine Restriction:** Specify whether only Combine is allowed. **EcoPrint Restriction:** Specify whether only EcoPrint is allowed. **Send Restriction:** Select whether or not use of the send function is prohibited. **FAX TX Restriction*2:** Select whether or not use of the fax send function is prohibited. **Storing Restr. in Box:** Select whether or not use of the box store function is prohibited. **Storing Restr. in Memory:** Select whether or not use of the removable memory store function is prohibited.
My Panel	You can register the language selection, initial screen, and shortcut settings for each user. Settings registered here can be applied simply by logging in.

*1 Displayed when Local Authorization is enabled.
Local Authorization (page 9-19)
*2 Displayed only when the optional FAX Kit is installed.

NOTE

For details on entering characters, refer to the following:

Character Entry Method (page 11-10)

If you selected [**Send**] in the Default Screen for "My Panel", select the screen to display from [**Destination**], [**Machine Address Book**], or a registered external address book.

3 Select [Save].

A new user is added on the local user list.

NOTE

If simple login is enabled, a confirmation screen appears when new registration is finished asking if you will configure simple login settings. To configure simple login settings, select [**Yes**]. If you select [**No**], you will return to the user list screen.

For the procedure for configuring simple login settings, refer to the following:

Simple Login Settings (page 9-28)

Changing User Properties

Types of user properties that could be changed may be different depending on user access privilege.

NOTE

To change the user information of the machine administrator, you must log in with machine administrator authority. You can only view user information if you log in as a regular user.

The factory default login user name and login password are set as shown below.

Model Name	Login User Name	Login Password
2552ci	2500	2500
3252ci	3200	3200
3552ci	3500	3500
4052ci	4000	4000
5052ci	5000	5000
6052ci	6000	6000

For a user with administrator rights who logs in

User properties can be changed and users can be deleted. The items, which can be added, are all able to be changed.

1 Display the screen.

1 [**System Menu/Counter**] key > [**User Login/Job Accounting**]

NOTE

If the login user name entry screen appears during operations, enter a login user name and password, and select [**Login**]. For this, you need to login with administrator privileges.

The factory default login user name and login password are set as shown below.

Model Name	Login User Name	Login Password
2552ci	2500	2500
3252ci	3200	3200
3552ci	3500	3500
4052ci	4000	4000
5052ci	5000	5000
6052ci	6000	6000

2 "User Login Setting" [**Next**] > "Local User List" [**Add/Edit**]

2 Change the user properties.

Changing user properties

1 Select the user whose properties you wish to change > [**Detail**]

> **NOTE**
> Select [**Name**] or [**ID**] from the "Sort" to sort the user list.
> Select [**Search(Name)**] or [**Search(ID)**] to search by name or login user name.

2 Refer to step 3 of "Adding a User (Local User List)" to change a user property.

Adding a User (Local User List) (page 9-8)

3 [**Save**] > [**Yes**]

The user information is changed.

Deleting a user

1 Select the user to delete.

2 [**Delete**] > [**Yes**]

The selected user will be deleted.

> **NOTE**
> The default user with machine administrator rights cannot be deleted.

Changing the user information of logged in user (User Property)

These users can partially change their own user properties including user name, login password, E-mail address, Simple Login, and My Panel.

Although "Login User Name", "Access Level", or "Account Name" cannot be changed, the users can check the present status.

1 Display the screen.

[**System Menu/Counter**] key > [**User Property**]

2 Change the user properties.

1 Refer to step 3 of "Adding a User (Local User List)" to change a user property.

Adding a User (Local User List) (page 9-8)

Item	Description
User Name	Changes the name shown on the user list. Up to 32 characters can be entered.
Login User Name	Displays the login user name that is entered at login.
Login Password	Changes the password that is entered at login. Up to 64 characters can be entered.
Access Level	Displays the user's access level.

Item	Description
Maximum Password Age	Displays the term of validity of the login password. **NOTE** This function does not appear when Password Policy is set to [**Off**] or the term of validity of the password is set to [**Off**].
E-mail Address	Changes the user's e-mail address. Up to 128 characters can be entered. **NOTE** This function appears when Local Authorization is set to [**On**], Group Authorization is set to [**On**], and Guest Authorization Setting is set to [**On**].
Authorization Rules	Displays the usage restriction that is set for the logged in user. **NOTE** This function appears when Local Authorization is set to [**On**], Group Authorization is set to [**On**], or Guest Authorization Setting is set to [**On**]. [**Job Accounting Rules**] shows the account name set for the logged in user and the usage restrictions that are set for that account. This function appears when job accounting is set to [**On**]. For information on job accounting, refer to the following: Job Accounting Access (page 9-36)
Simple Login	When simple login is enabled, changes associated settings. **NOTE** This function does not appear when Simple Login is set to [**Off**] or the user is not registered in Simple Login.
ID Card Information	Displays the ID card information of the logged in user. **NOTE** This function is displayed when the optional ID Card Authentication Kit is activated. Optional Applications (page 11-8) This function does not appear when the server type is set to [**Ext.**] in Network Authentication, and logged in with the user account certificated in the server specified as the [**Ext.**] server type.
My Panel	Register the language and default screen for each user. Once registered, the setting will be applied simply by login. Network users are not displayed.

2 Select [**Save**].

The user information is changed.

User Login Administration for Printing

It is possible to manage the users that print on this machine from a PC.

Setting Printer Driver

To manage the users that print on this machine from a PC, the following settings are necessary in the printer driver. Instructions are based on interface elements as they appear in Windows 8.1.

1 Display the screen.

1 Select [**Settings**] in charms on Desktop, and select [**Control Panel**], and then [**Devices and Printers**].

> **NOTE**
> In Windows 7, click [**Start**] button on the Windows, and then click [**Devices and Printers**].

2 Right-click the printer driver icon of the machine, and click the [**Printer properties**] menu of the printer driver.

3 Click [**Administrator**] on the [**Device Settings**] tab.

2 Configure the settings.

1 Select [**User Login**] on the [**User Login**] tab.

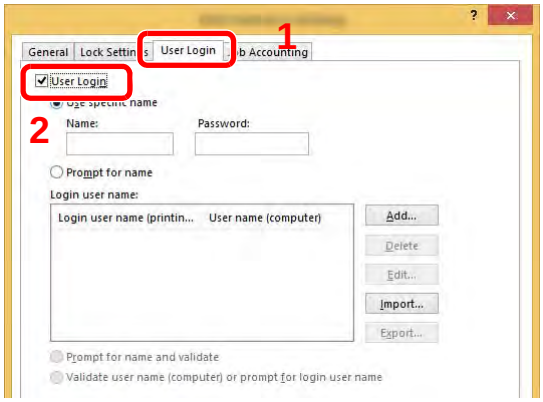

2 Set the User Login Administration.

[**Use specific name**]: This option can be used to specify a user name and password to use the same User login for every print job. If this option is selected, the user does not have to type the name and password for each print job.

[**Prompt for name**]: A screen for entering the user name and password will be displayed when attempting a printing. The user name and password must be entered each time a printing is attempted.

[**Prompt for name and validate**]: A screen for entering the user name and password will be displayed when attempting a printing. The user name and password stored in the Login user name list needs to be entered. The user name and password must be entered each time a printing is attempted.

[**Validate user name (computer) or prompt for login user name**]: When printing, the Windows user name is searched in the "Login user names" and printing is possible if the name is registered. If the name is not registered, the printing will be canceled for users with only user authority. If the user has administrator privileges, the screen to enter the user name and password will appear.

3 Click [**OK**].

NOTE

For other settings of job accounting, refer to the following:

Printer Driver User Guide

Managing the Users to Scan Using TWAIN

It is possible to manage the users that scan using TWAIN.

Setting TWAIN Driver

To manage the users that scan using TWAIN, the following settings are necessary in the TWAIN driver. Instructions are based on interface elements as they appear in Windows 8.1.

1 Display the screen.

1 Select [**Search**] in charms, and enter "TWAIN Driver Setting" in the search box. Click [**TWAIN Driver Setting**] in the search list then the TWAIN Driver Setting screen appears.

NOTE

In Windows 7, select [**Start**] button on the Windows, [**All Programs**], [**Kyocera**] and then [**TWAIN Driver Setting**].

2 Select the machine, and click [**Edit**].

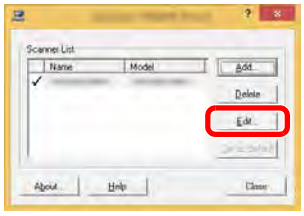

2 Configure the settings.

1 Click [**User Authentication Settings**].

2 Select the checkbox beside [**Authentication**], and enter Login User Name and Password.

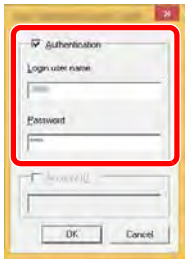

3 Click [**OK**].

Managing the Users to Scan Using WIA

It is possible to manage the users that scan using WIA.

Setting WIA Driver

To manage the users that scan using WIA, the following settings are necessary in the WIA driver. Instructions are based on interface elements as they appear in Windows 8.1.

1 Display the screen.

1 Click [**Search**] in charms, and enter "Scanner" in the search box. Click [**View scanners and cameras**] in the search list then the Scanners and Cameras screen appears.

> **NOTE**
> In Windows 7, click [**Start**] button on the Windows and enter [**Scanner**] in [**Program and File Search**]. Click [**View scanners and cameras**] in the search list then the Scanners and Cameras screen appears.

2 Select the same name as this machine from WIA Drivers, and press [**Properties**].

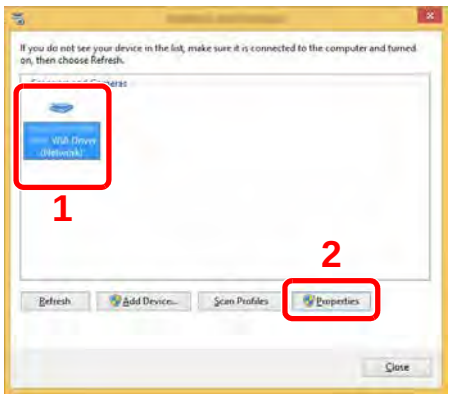

2 Configure the settings.

1 Select the checkbox beside [**Authentication**] on the [**Settings**] tab, and enter Login User Name and Password.

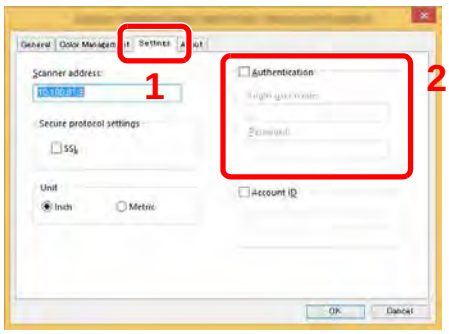

2 Click [**OK**].

Managing the Users that Send Faxes from a PC

It is possible to manage the users that send faxes from a PC.

Setting FAX Driver

To manage the users that send faxes from a PC, the following settings are necessary in the FAX driver. Instructions are based on interface elements as they appear in Windows 8.1.

1 Display the screen.

1 Select [**Settings**] in charms on Desktop, and select [**Control Panel**], and then [**Devices and Printers**].

> **NOTE**
> In Windows 7, click [**Start**] button on the Windows, and then click [**Devices and Printers**].

2 Right-click the printer driver icon of the machine, and click the [**Printer properties**] menu of the printer driver.

3 Click [**FAX TX Setting**] on the [**Printing Preferences**] window.

2 Configure the settings.

1 Select [**User Login**] on the [**Authentication**] tab.

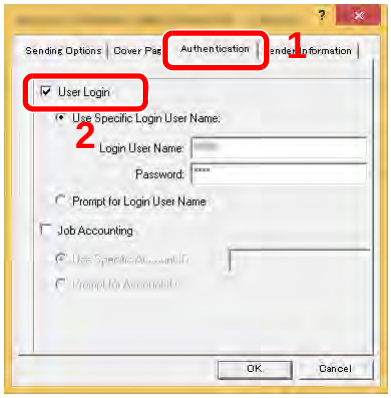

2 Set the User Login Administration.

[**Use Specific Login User Name**]: This option can be used to specify a user name and password to use the same User login for every FAX job. If this option is selected, the user does not have to type the name and password for each FAX job.

[**Prompt for Login User Name**]: A screen for entering the user name and password will be displayed when attempting a transmission. The user name and password must be entered each time a transmission is attempted.

3 Click [**OK**].

Local Authorization

Select whether or not to use Local Authorization.

NOTE

When using Local Authorization, the user authentication type must be set to [**Local Authentication**].

Enabling User Login Administration (page 9-3)

1 Display the screen.

1 [**System Menu/Counter**] key > [**User Login/Job Accounting**]

NOTE

If the login user name entry screen appears during operations, enter a login user name and password, and select [**Login**]. For this, you need to login with administrator privileges.

The factory default login user name and login password are set as shown below.

Model Name	Login User Name	Login Password
2552ci	2500	2500
3252ci	3200	3200
3552ci	3500	3500
4052ci	4000	4000
5052ci	5000	5000
6052ci	6000	6000

2 "User Login Setting" [**Next**] > "Local Authorization" [**Change**]

2 [Off] or [On] > [OK]

Group Authorization Settings

Set restrictions of the machine usage by each individual group registered in the authentication server.

NOTE

To use the group authorization settings, [**Network Authentication**] must be selected for the authentication method in "Enabling User Login Administration". Select "On" for "LDAP" in "Protocol Detail".

Enabling User Login Administration (page 9-3)
Protocol Settings (page 8-55)

Group Authorization

1 Display the screen.

1 [**System Menu/Counter**] key > [**User Login/Job Accounting**]

NOTE

If the login user name entry screen appears during operations, enter a login user name and password, and select [**Login**]. For this, you need to login with administrator privileges.

The factory default login user name and login password are set as shown below.

Model Name	Login User Name	Login Password
2552ci	2500	2500
3252ci	3200	3200
3552ci	3500	3500
4052ci	4000	4000
5052ci	5000	5000
6052ci	6000	6000

2 "User Login Setting" [**Next**] > "Group Authorization Set." [**Next**] > "Group Authorization" [**Change**]

2 [On] > [OK]

Group List (Up to 20)

Register the groups that are restricted the machine usage. Other users and groups belong to "Others".

1 Display the screen.

1 [**System Menu/Counter**] key > [**User Login/Job Accounting**]

NOTE

If the login user name entry screen appears during operations, enter a login user name and password, and select [**Login**]. For this, you need to login with administrator privileges.

The factory default login user name and login password are set as shown below.

Model Name	Login User Name	Login Password
2552ci	2500	2500
3252ci	3200	3200
3552ci	3500	3500
4052ci	4000	4000
5052ci	5000	5000
6052ci	6000	6000

2 "User Login Setting" [**Next**] > "Group Authorization Set." [**Next**] > "Group List" [**Change**]

2 Configure the settings.

[**Add**] > Add information on each item > [**OK**]

Item	Descriptions
Group ID[*1]	Enter the ID displayed on the group list (between 1 and 4294967295).
Group Name	Enter the name displayed on the group list (up to 32 characters).
Access Level	Select [**Administrator**] or [**User**] for group access privileges.
Print Restriction	Select whether or not to reject usage of print functions for the printer.
Print Restriction (Color)	Select whether or not to reject usage of color print functions for the printer.
Copy Restriction	Select whether or not to reject usage of copy functions.
Copy Restriction (Color)	Select whether or not to reject usage of color copy functions.
Copy Restr. (Full Color)	Select whether or not to reject usage of only full-color print functions for copies.
Duplex Restriction	Select whether only duplex printing is allowed.
Combine Restrict.	Specify whether only Combine is allowed.
EcoPrint Restriction	Specify whether only EcoPrint is allowed.

Item	Descriptions
Send Restriction	Select whether or not to reject usage of the send functions.
FAX Transmission*2	Select whether or not to reject usage of the FAX transmissions.
Storing Restr. in Box	Select whether or not to reject usage of storing in the document boxes.
Storing Restr. in Memory	Select whether or not to reject usage of storing in the removable memory.

*1 For "Group ID", specify PrimaryGroupID assigned by Active Directory of Windows. If you are using Windows Server 2008, check Attribute Editor tab of user properties. If you are using Windows Server 2000/2003, check ADSIEdit. ADSIEdit is a support tool included on the installation DVD for Windows Server OS (under \SUPPORT\TOOLS).

*2 Displayed only when the optional FAX Kit is installed.

NOTE

For details on entering characters, refer to the following:

Character Entry Method (page 11-10)

3 Register the group.

Select [**Save**].

A new group is added on the group list.

Guest Authorization Set.

When User Login Administration is enabled, set the functions that guest users who cannot log in to the machine are allowed to use.

NOTE

- To use Guest Authorization Set., User Login Administration must be enabled in "Enabling User Login Administration".
  Enabling User Login Administration (page 9-3)
- Cannot be used when the Key Counter option is used.

Enabling Guest Authorization

1 Display the screen.

1 [**System Menu/Counter**] key > [**User Login/Job Accounting**]

NOTE

If the login user name entry screen appears during operations, enter a login user name and password, and select [**Login**]. For this, you need to login with administrator privileges.

The factory default login user name and login password are set as shown below.

Model Name	Login User Name	Login Password
2552ci	2500	2500
3252ci	3200	3200
3552ci	3500	3500
4052ci	4000	4000
5052ci	5000	5000
6052ci	6000	6000

2 "User Login Setting" [**Next**] > "Guest Authorization Set." [**Next**] > "Guest Authorization" [**Change**]

2 [On] > [OK]

NOTE

If the guest authorization setting is enabled, the [**Authentication/Logout**] key must be selected when logging in.

In the guest user default settings, only monochrome copying can be used. If you wish to use a different function, log in as a user who can use that function, or change the settings in the guest properties.

Configuring Guest Property

Register guest user information and functions that are restricted.

1 Display the screen.

1 [**System Menu/Counter**] key > [**User Login/Job Accounting**]

NOTE

If the login user name entry screen appears during operations, enter a login user name and password, and select [**Login**]. For this, you need to login with administrator privileges.

The factory default login user name and login password are set as shown below.

Model Name	Login User Name	Login Password
2552ci	2500	2500
3252ci	3200	3200
3552ci	3500	3500
4052ci	4000	4000
5052ci	5000	5000
6052ci	6000	6000

2 "User Login Setting" [**Next**] > "Guest Authorization Set." [**Next**] > "Guest Property" [**Next**]

2 Configure the settings.

Check the settings and change or add information as needed.

Item	Descriptions
User Name	Enter the name displayed on the user list (up to 32 characters). The default setting is "Guest User".
Access Level	The authority of the user appears. This cannot be changed.
Account Name	Add an account where the user belongs. If the user does not belong to any account, select [**Others**].

Item	Descriptions
Authorization Rules	Set usage authority for each user. The items you can restrict the access level with are as follows. **Print Restriction:** Select whether or not use of the print function of the printer is prohibited. **Print Restriction (Color):** Select whether or not use of the print function (color) of the printer is prohibited. **Copy Restriction:** Select whether or not use of the copy print function is prohibited. **Copy Restriction (Color):** Select whether or not use of the copy print function (color) is prohibited. **Copy Restriction (Full Color):** Select whether or not use of the copy print function (full color) is prohibited. **Duplex Restriction:** Select whether only duplex printing is allowed. **Combine Restrict.:** Specify whether only Combine is allowed. **EcoPrint Restriction:** Specify whether only EcoPrint is allowed. **Send Restriction:** Select whether or not use of the send function is prohibited. **FAX TX Restriction*1:** Select whether or not use of the fax send function is prohibited. **Storing Restr. in Box:** Select whether or not use of the box store function is prohibited. **Storing Restr. in Memory:** Select whether or not use of the removable memory store function is prohibited.

*1 Displayed only when the optional FAX Kit is installed.

3 Register the group.

Select [**Save**].

Obtain NW User Property

Set the required information to obtain the network user property from the LDAP server. The user name and E-mail address obtained with this setting is shown in the user information, the status confirmation screen, and the header of E-mail.

NOTE

To obtain the network user property from the LDAP server, [**Network Authentication**] must be selected for the authentication method in "Enabling User Login Administration". Select "On" for "LDAP" in "Protocol Detail".

Enabling User Login Administration (page 9-3)
Protocol Settings (page 8-55)

1 Display the screen.

1 [**System Menu/Counter**] key > [**User Login/Job Accounting**]

NOTE

If the login user name entry screen appears during operations, enter a login user name and password, and select [**Login**]. For this, you need to login with administrator privileges.

The factory default login user name and login password are set as shown below.

Model Name	Login User Name	Login Password
2552ci	2500	2500
3252ci	3200	3200
3552ci	3500	3500
4052ci	4000	4000
5052ci	5000	5000
6052ci	6000	6000

2 [**User Login Setting**] > [**Obtain NW User Property**] > [**On**]

2 Configure the settings.

[**On**] > Add information on each item > [**OK**]

Item	Descriptions
Server Name[*1]	Enter the LDAP server name or the IP address (up to 64 characters). If a server name is not entered, user information will be acquired from the server set for Network Authentication.
Port	Port number for LDAP server. The default port number is 389.
Name 1[*2]	Enter the LDAP Attribute to obtain the user name to be displayed from the LDAP server (up to 32 characters).
Name 2[*3]	Enter the LDAP Attribute to obtain the user name to be displayed from the LDAP server (up to 32 characters).
E-mail Address[*4]	Enter the LDAP Attribute to obtain the E-mail address from the LDAP server (up to 32 characters).

Item	Descriptions
Authentic at Type[*5]	Set the authentication method. Select [**Simple**] or [**SASL**]. After changing the setting, restart the system or turn the power off and then on.
Search Timeout	Set the amount of time to wait before time-out in seconds (from 5 to 255 seconds).
LDAP Security	Select the type of encryption according to the type of security employed by the LDAP server. The value is [**Off**], [**SSL/TLS**] or [**STARTTLS**].

*1 If using Active Directory of Windows, the server name may be the same as the server name entered in the network authentication.
*2 If using Active Directory of Windows, displayName of Attribute may be used as "Name 1".
*3 "Name 2" can be left out. When you assign displayName in "Name 1" and department in "Name 2", and if the value of displayName is "Mike Smith" and the value of department is "Sales" in Active Directory of Windows, the user name appears as "Mike Smith Sales".
*4 If using Active Directory of Windows, mail of Attribute may be used as E-mail Address.
*5 Appears when the server type is set to "Kerberos" in "Network Authentication".

Simple Login Settings

The simple login function allows users to log in simply by selecting a user name. Users must be registered in advance to use this functionality.

NOTE

- For user registration, refer to the following:
  Adding a User (Local User List) (page 9-8)
- To use Simple Login, User Login Administration must be enabled in "Enabling User Login Administration".
  Enabling User Login Administration (page 9-3)
- When the guest authorization setting is enabled, the Simple Login screen is not displayed.

Enabling Simple Login

1 Display the screen.

1 [**System Menu/Counter**] key > [**User Login/Job Accounting**]

NOTE

If the login user name entry screen appears during operations, enter a login user name and password, and select [**Login**]. For this, you need to login with administrator privileges.

The factory default login user name and login password are set as shown below.

Model Name	Login User Name	Login Password
2552ci	2500	2500
3252ci	3200	3200
3552ci	3500	3500
4052ci	4000	4000
5052ci	5000	5000
6052ci	6000	6000

2 "User Login Setting" [**Next**] > "Simple Login Settings" [**Next**] > "Simple Login" [**Change**]

2 [On] or [Off] > [OK]

Simple Login Key

Register users to use simple login. You can add up to 20 users.

1 Display the screen.

1 [**System Menu/Counter**] key > [**User Login/Job Accounting**]

NOTE

If the login user name entry screen appears during operations, enter a login user name and password, and select [**Login**]. For this, you need to login with administrator privileges.

The factory default login user name and login password are set as shown below.

Model Name	Login User Name	Login Password
2552ci	2500	2500
3252ci	3200	3200
3552ci	3500	3500
4052ci	4000	4000
5052ci	5000	5000
6052ci	6000	6000

2 "User Login Setting" [**Next**] > "Simple Login Settings" [**Next**] > "Simple Login Key" [**Next**]

2 Enter the user information.

1 Select the key to which you want to register a user.

2 Select [**Add/Edit**].

3 "Display Name" [**Change**] > Enter the user name to be displayed > [**OK**]

NOTE

For details on entering characters, refer to the following:

Character Entry Method (page 11-10)

4 Select "User" [**Change**].

5 To specify the user from local users, select [**Local User**]. To specify from network users, select [**Network User**].

The procedure differs depending on the transmission method selected.

Specifying the user from local users

Select the user to be set for simple login.

NOTE

- Select [**Name**] or [**ID**] from the "Sort" to sort the account list.
- Select [**Search(Name)**] or [**Search(ID)**] to search by account name or account ID.

Specifying the user from network users

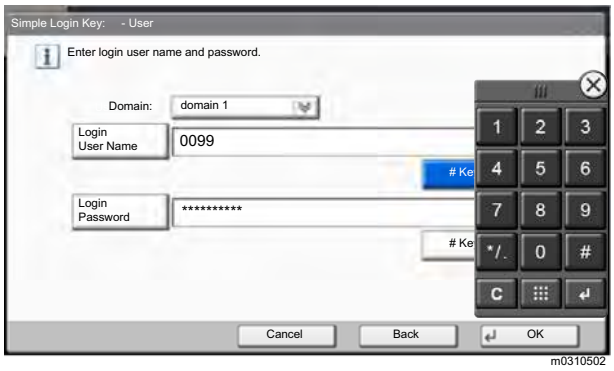

Select [**Login User Name**] and [**Login Password**], enter the information of the user to be registered, and select [**OK**].

If you are specifying a user for whom a domain is set in network authentication, select the "Domain" and select the domain where the user is registered.

NOTE

For details on entering characters, refer to the following:

Character Entry Method (page 11-10)

6 "Password" [**Change**] > [**On**] or [**Off**] > [**OK**] > "Icon" [**Change**]

7 Select the user icon to be displayed and select [**OK**].

3 Register the user.

Select [**Save**].

ID Card Settings

If ID card authentication is enabled, select the authentication type.

NOTE

This functions appears when the Card Authentication kit is activated.

Optional Applications (page 11-8)

This function does not appear when the user logs in as a network authentication user.

1 Display the screen.

1 [**System Menu/Counter**] key > [**User Login/Job Accounting**]

NOTE

If the login user name entry screen appears during operations, enter a login user name and password, and select [**Login**]. For this, you need to login with administrator privileges.

The factory default login user name and login password are set as shown below.

Model Name	Login User Name	Login Password
2552ci	2500	2500
3252ci	3200	3200
3552ci	3500	3500
4052ci	4000	4000
5052ci	5000	5000
6052ci	6000	6000

2 "User Login Setting" [**Next**] > "ID Card Settings" [**Next**]

2 Configure the settings.

The following settings can be selected.

Item	Descriptions
Keyboard Login	When ID card authentication is enabled, select whether or not login by keyboard is allowed. **Value: Permit, Prohibit**
Additional Authentication*1	Select whether or not to require password entry after authenticating by ID card. **Value: Off, Use Password, Use PIN**

*1 This function does not appear when the server type is set to [**NTLM**] or [**Kerberos**] in "Network Authentication".

PIN Code Authorization

NOTE

When using PIN Code Authorization, the network authentication must be enabled and [**Ext.**] must be selected for server type.

Enabling User Login Administration (page 9-3)

1 Display the screen.

1 [**System Menu/Counter**] key > [**User Login/Job Accounting**]

NOTE

If the login user name entry screen appears during operations, enter a login user name and password, and select [**Login**]. For this, you need to login with administrator privileges.

The factory default login user name and login password are set as shown below.

Model Name	Login User Name	Login Password
2552ci	2500	2500
3252ci	3200	3200
3552ci	3500	3500
4052ci	4000	4000
5052ci	5000	5000
6052ci	6000	6000

2 "User Login Setting" [**Next**] > "PIN Code Authorization" [**Change**]

2 [Off] or [On] > [OK]

Using User Login Administration

This section explains procedures while setting job accounting.

Login/Logout

If user login administration is enabled, the login user name and login password entry screen appears each time you use this machine.

Login

If the login user name entry screen appears during operations, log in by referring to the following:

Login (page 2-27)

Logout

When the operations are complete, select the [**Authentication/Logout**] key to return to the login user name and login password entry screen.

Overview of Job Accounting

Job accounting manages the copy/print/scan/FAX count accumulated by individual accounts by assigning an ID to each account.

1 Enable job accounting. (page 9-35)

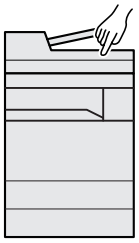

2 Setting an account. (page 9-37)

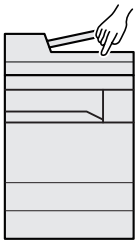

3 Enter the assigned account ID when performing the job. (page 9-33)

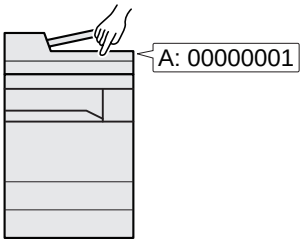

4 Count the number of pages copied, printed, scanned and faxed.

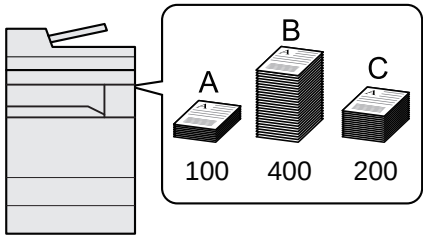

To Manage the Number of Sheets Used on Jobs Printed from a PC

To manage the number of jobs to be printed from the PC on the network, you need to configure settings by using the printer driver on the PC.

1 Set Job Accounting for the PC on the network by using the printer driver. (page 9-42)

2 Execute printing.

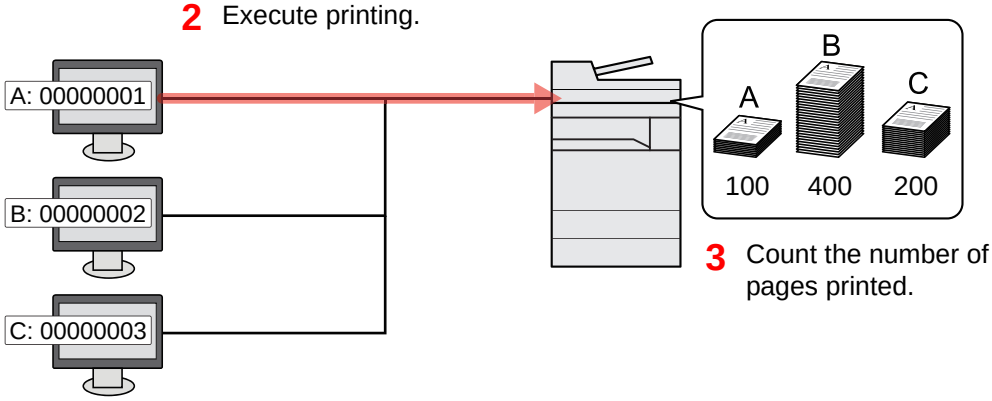

3 Count the number of pages printed.

Managing the Scan Job Account by Using TWAIN

To manage the scan job account by using TWAIN, you need to configure the TWAIN driver settings on the computer connected to the machine.

Job Accounting for Scan Using TWAIN (page 9-43)

Managing the Scan Job Account by Using WIA

To manage the scan job account by using WIA, you need to configure the WIA driver settings on the computer connected to the machine.

Job Accounting for Scan Using WIA (page 9-44)

Managing the FAX Job Transmitted from a PC

To manage the number of FAX jobs transmitted from the PC, you need to configure the settings by using the FAX Driver on the PC.

Job Accounting for the FAX Transmitted from a Computer (page 9-45)

The optional FAX Kit is required in order to make use of fax functionality.

Enabling Job Accounting

1 Display the screen.

1 [**System Menu/Counter**] key > [**User Login/Job Accounting**]

NOTE

If the login user name entry screen appears during operations, enter a login user name and password, and select [**Login**]. For this, you need to login with administrator privileges.

The factory default login user name and login password are set as shown below.

Model Name	Login User Name	Login Password
2552ci	2500	2500
3252ci	3200	3200
3552ci	3500	3500
4052ci	4000	4000
5052ci	5000	5000
6052ci	6000	6000

2 "Job Accounting Settings" [**Next**] > "Job Accounting" [**Change**]

2 Configure the settings.

[**On**] > [**OK**]

NOTE

- To disable job accounting, select [**Off**].
- When the display returns to System Menu default screen, logout is automatically executed and the screen to enter the Account ID appears. To continue the operation, enter the Account ID.

Job Accounting Access

1 Display the screen.

1 [**System Menu/Counter**] key > [**User Login/Job Accounting**]

NOTE

If the login user name entry screen appears during operations, enter a login user name and password, and select [**Login**]. For this, you need to login with administrator privileges.

The factory default login user name and login password are set as shown below.

Model Name	Login User Name	Login Password
2552ci	2500	2500
3252ci	3200	3200
3552ci	3500	3500
4052ci	4000	4000
5052ci	5000	5000
6052ci	6000	6000

2 [**Job Accounting Settings**] > [**Job Accounting Access**]

2 Configure the settings.

[**Local**] or [**Network**] > [**OK**]

NOTE

To select [**Network**], network authentication must be enabled and [**Ext.**] must be selected for server type.

Job Accounting (Local)

You can add, change and delete an account and set the restriction for each account.

Adding an Account

Up to 1000 individual accounts can be added. The following entries are required.

Item	Descriptions
Account Name	Enter the account name (up to 32 characters).
Account ID	Enter the account ID as many as eight digits (between 0 and 99999999).
Restriction	This prohibits printing/scanning or restricts the number of sheets to load. Restricting the Use of the Machine (page 9-39)

1 Display the screen.

1 [**System Menu/Counter**] key > [**User Login/Job Accounting**]

NOTE

If the login user name entry screen appears during operations, enter a login user name and password, and select [**Login**]. For this, you need to login with administrator privileges.

The factory default login user name and login password are set as shown below.

Model Name	Login User Name	Login Password
2552ci	2500	2500
3252ci	3200	3200
3552ci	3500	3500
4052ci	4000	4000
5052ci	5000	5000
6052ci	6000	6000

2 "Job Accounting Settings" [**Next**] > "Job Accounting (Local)" [**Next**] > "Accounting List" [**Add/Edit**] > [**Add**]

2 Enter the account information.

1 "Account Name" [**Change**] > Enter the account name > [**OK**]

NOTE

For details on entering characters, refer to the following:

Character Entry Method (page 11-10)

2 "Account ID" [**Change**] > Enter the account ID > [**OK**]

NOTE

Any "Account ID" that has already registered cannot be used. Enter any other account ID.

3 Activate or deactivate restriction.

Restricting the Use of the Machine (page 9-39)

4 Select [**Save**].

A new account is added on the Account List.

Restricting the Use of the Machine

This section explains how to restrict the use of the machine by account or the number of sheets available.

The items that can be restricted differ depending on whether "Individual" or "Total" is selected for "Copy/Print Count".

Copy/Printer Count (page 9-54)

Restriction Items

"Individual" selected for Copy/Printer Count "Split" selected for Copy/Printer Count

Item	Descriptions
Copy Restriction (Total)	Limits the number of sheets used for copying.
Copy Restr. (Full Color)	Limits the number of pages used for full-color copying.
Copy Restr. (SingleColor)	Limits the number of pages used for single-color copying.
Print Restriction (Total)	Limits the number of sheets used for printing.
Print Restr. (Full Color)	Limits the number of pages used for full-color printing.
Scan Restriction (Others)	Limits the number of sheets scanned (excludes copying).
FAX TX Restriction	Limits the number of sheets sent by fax. This is displayed when the optional FAX Kit is installed.
FAX Port Restriction	Restricts the ports used for faxing. This is displayed when two optional FAX Kits are installed.

"Total" selected for Copy/Printer Count

Item	Descriptions
Print Restriction (Total)	Limits the total number of sheets used for copying and printing.
Print Restr. (Full Color)	Limits the number of pages used for full-color printing.
Print Restr. (SingleCol.)	Limits the number of sheets used for single-color printing.
Scan Restriction (Others)	Limits the number of sheets scanned (excludes copying).
FAX TX Restriction	Limits the number of sheets sent by fax. This is displayed only on products with the fax function installed.
FAX Port Restriction	Restricts the ports used for faxing. This is displayed when two optional FAX Kits are installed.

IMPORTANT

Select [Off], [Use Port 1 Only] or [Use Port 2 Only] as the "FAX Port Restriction" setting.

Applying Restriction

Restriction can be applied in the following modes:

Item	Descriptions
Off	No restriction is applied.
Counter Limit	Restricts the print counter in one-page increments up to 9,999,999 copies.
Reject Usage	Restriction is applied.

Editing an Account

1 Display the screen.

1 [**System Menu/Counter**] key > [**User Login/Job Accounting**]

NOTE

If the login user name entry screen appears during operations, enter a login user name and password, and select [**Login**]. For this, you need to login with administrator privileges.

The factory default login user name and login password are set as shown below.

Model Name	Login User Name	Login Password
2552ci	2500	2500
3252ci	3200	3200
3552ci	3500	3500
4052ci	4000	4000
5052ci	5000	5000
6052ci	6000	6000

2 "Job Accounting Settings" [**Next**] > "Job Accounting (Local)" [**Next**] > "Accounting List" [**Add/Edit**]

2 Edit an account.

1 Select [**Detail**] for the account name you wish to edit.

NOTE

- Select [**Name**] or [**ID**] from the "Sort" to sort the account list.
- Select [**Search(Name)**] or [**Search(ID)**] to search by account name or account ID.

2 Select the account information to be changed and change the account information.

3 [**Save**] > [**Yes**]

The account information is changed.

Deleting an Account

1 Display the screen.

1 [**System Menu/Counter**] key > [**User Login/Job Accounting**]

NOTE

If the login user name entry screen appears during operations, enter a login user name and password, and select [**Login**]. For this, you need to login with administrator privileges.

The factory default login user name and login password are set as shown below.

Model Name	Login User Name	Login Password
2552ci	2500	2500
3252ci	3200	3200
3552ci	3500	3500
4052ci	4000	4000
5052ci	5000	5000
6052ci	6000	6000

2 "Job Accounting Settings" [**Next**] > "Job Accounting (Local)" [**Next**] > "Accounting List" [**Add/Edit**]

2 Delete an account.

1 Select the account name you wish to delete.

2 [**Delete**] > [**Yes**]

The account is deleted.

Job Accounting for Printing

The number of jobs to be printed from the computer can be managed by Job Accounting.

Setting Printer Driver

To manage the number of jobs to be printed from the PC on the network, you need configure the following settings by using the printer driver on the PC. Instructions are based on interface elements as they appear in Windows 8.1.

1 Display the screen.

1 Select [**Settings**] in charms on Desktop, and select [**Control Panel**], and then [**Devices and Printers**].

> **NOTE**
> In Windows 7, click [**Start**] button on the Windows, and then click [**Devices and Printers**].

2 Right-click the printer driver icon of the machine, and click the [**Printer properties**] menu of the printer driver.

3 Click [**Administrator**] on the [**Device Settings**] tab.

2 Configure the settings.

1 Select [**Job accounting**] on the [**Job Accounting**] tab.

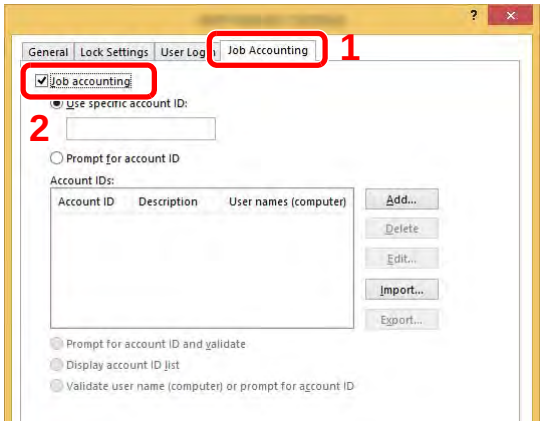

2 Set the Account ID.

[**Use specific account ID**]: Enter the Account ID. Printing will be performed using the entered Account ID. If this option is selected, the user does not have to enter the Account ID for each print job.

[**Prompt for account ID**]: A screen for entering the Account ID will be displayed when attempting a printing. The Account ID must be entered each time a printing is attempted.

[**Prompt for account ID and validate**]: A screen for entering the Account ID will be displayed when attempting a printing. The Account ID stored in the Account ID list needs to be entered. The Account ID must be entered each time a printing is attempted.

[**Display account ID list**]: The Account ID list is displayed when printing. The Account ID to be used needs to be selected from the list.

[**Validate user name (computer) or prompt for account ID**]: When printing, the Windows user name is searched in the "Account IDs" and printing is possible if the name is registered. If the Account ID is not registered, the screen for entering the Account ID will appear.

3 Click [**OK**].

NOTE

For other settings of job accounting, refer to the following:

Printer Driver User Guide

Job Accounting for Scan Using TWAIN

The number of jobs scanned by using TWAIN can be managed by Job Accounting.

Setting TWAIN Driver

To manage the number of jobs scanned by using TWAIN, you need to configure the following settings by using the TWAIN Driver on the computer. Instructions are based on interface elements as they appear in Windows 8.1.

1 Display the screen.

1 Select [**Search**] in charms, and enter "TWAIN Driver Setting" in the search box. Click [**TWAIN Driver Setting**] in the search list then the TWAIN Driver Setting screen appears.

NOTE

In Windows 7, select [**Start**] button on the Windows, [**All Programs**], [**Kyocera**] and then [**TWAIN Driver Setting**].

2 Select the machine, click [**Edit**].

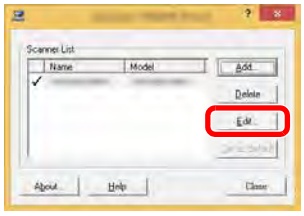

2 Configure the settings.

1 Click [**User Authentication Settings**].

2 Select the checkbox beside [**Account**], and enter the account ID.

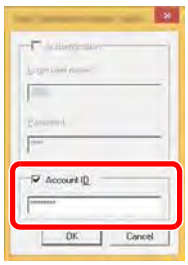

3 Click [**OK**].

Job Accounting for Scan Using WIA

The number of jobs scanned by using WIA can be managed by Job Accounting.

Setting WIA Driver

To manage the number of jobs scanned by using WIA, you need to configure the following settings by using the WIA Driver on the computer. Instructions are based on interface elements as they appear in Windows 8.1.

1 Display the screen.

1 Click [**Search**] in charms, and enter "Scanner" in the search box. Click [**View scanners and cameras**] in the search list then the Scanners and Cameras screen appears.

> **NOTE**
> In Windows 7, click [**Start**] button on the Windows and enter [**Scanner**] in [**Program and File Search**]. Click [**View scanners and cameras**] in the search list then the Scanners and Cameras screen appears.

2 Select the same name as this machine from WIA Drivers, and press [**Properties**].

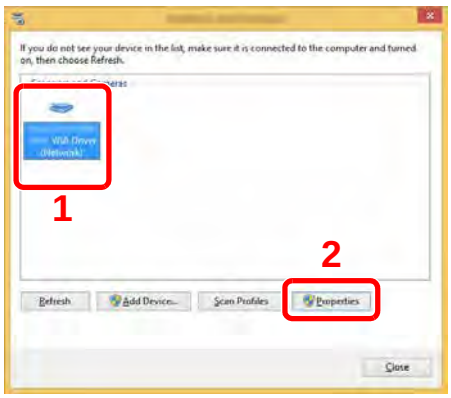

2 Configure WIA Driver.

1 Select the checkbox beside [**Account ID**] on the [**Settings**] tab, and enter the Account ID.

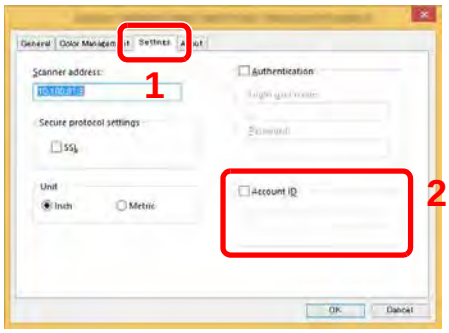

2 Click [**OK**].

Job Accounting for the FAX Transmitted from a Computer

The number of FAX jobs transmitted from the computer can be managed by Job Accounting.

NOTE

FAX functions are available only on products with the fax function installed.

Setting FAX Driver

To manage the number of FAX jobs transmitted from the computer, you need to configure the following settings by using the FAX Driver on the computer. Instructions are based on interface elements as they appear in Windows 8.1.

1 Display the screen.

1 Select [**Settings**] in charms on Desktop, and select [**Control Panel**], and then [**Devices and Printers**].

NOTE

In Windows 7, click [**Start**] button on the Windows, and then click [**Devices and Printers**].

2 Right click the name of the machine to be used as the FAX Driver and select [**Printing preferences**] from the resulting pull-down menu.

3 Click [**FAX TX Setting**] in the [**Printing Preferences**] window.

2 Configure the settings.

1 Select [**Job Accounting**] on the [**Authentication**] tab.

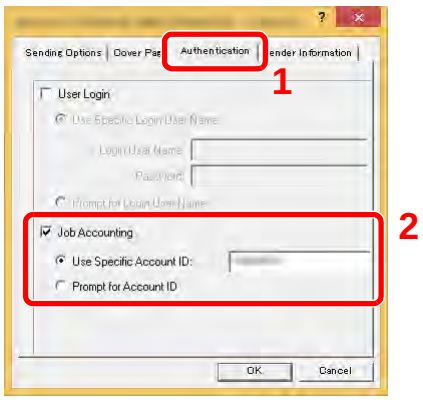

2 Set the Job Accounting.

[**Use Specific Account ID**]: This option can be used to specify an account ID to use the same Account ID for every FAX job. If this option is selected, the user does not have to enter the Account ID for each FAX job.

[**Prompt for Account ID**]: A screen for entering the Account ID will be displayed when attempting a transmission. The Account ID must be entered each time a transmission is attempted.

3 Click [**OK**].

Configuring Job Accounting

Default Setting

Select the default value for usage limit, and whether or not to enable counting by paper size.

1 Display the screen.

1 [**System Menu/Counter**] key > [**User Login/Job Accounting**]

NOTE

If the login user name entry screen appears during operations, enter a login user name and password, and select [**Login**]. For this, you need to login with administrator privileges.

The factory default login user name and login password are set as shown below.

Model Name	Login User Name	Login Password
2552ci	2500	2500
3252ci	3200	3200
3552ci	3500	3500
4052ci	4000	4000
5052ci	5000	5000
6052ci	6000	6000

2 "Job Accounting Settings" [**Next**] > "Job Accounting (Local)" [**Next**] > "Default Setting" [**Next**] > "Default Counter Limit" [**Next**]

2 Configure the settings.

1 Select [**Change**] for the item you want to modify and then select [**+**], [**-**] or use the numeric keys to enter the default restriction on the number of sheets.

2 Select [**OK**].

Item	Description
Counter Limit	When you add a new account, you can change the default restrictions on the number of sheets used. You can set any number from 1 to 9,999,999. The items that can be set differ depending on whether [**Individual**] or [**Total**] is selected for [**Copy/Printer Count**]. Copy/Printer Count (page 9-54)
[Individual] selected for Copy/Printer Count	
Copy Restriction (Total)	Sets the default restriction on the number of sheets used for copying.
Copy Restr. (Full Color)	Sets the default restriction on the number of sheets used for full-color copying.

Item	Description
Copy Restr. (SingleColor)	Sets the default restriction on the number of sheets used for single-color copying.
Print Restriction (Total)	Sets the default restriction on the number of sheets used for printing.
Print Restr. (Full Color)	Sets the default restriction on the number of sheets used for full-color printing.
Scan Restriction (Others)	Sets the default restriction on the number of sheets used for scanning (excludes copying).
FAX TX Restriction*1	Sets the default restriction on the number of sheets used for sending faxes.
[Total] selected for Copy/Printer Count	
Print Restriction (Total)	Sets the default restriction on the total number of sheets used for copying and printing.
Print Restr. (Full Color)	Sets the default restriction on the number of sheets used for full-color printing.
Print Restr. (SingleCol.)	Sets the default restriction on the number of sheets used for single-color printing.
Scan Restriction (Others)	Sets the default restriction on the number of sheets used for scanning (excludes copying).
FAX TX Restriction*1	Sets the default restriction on the number of sheets used for sending faxes.

*1 Displayed only when the optional FAX Kit is installed.

Count by Paper Size

This counts the number of pages by paper size (e.g. Letter).

NOTE

Paper size is available in five types, 1 to 5. These types are specified in accounting reports.

Print Accounting Report (page 9-51)

In addition to paper size, media type can also be specified (e.g. count the letter-size color paper used). If you do not specify the media type, the number of used sheets will be counted for the specified sheet size, regardless of the media type.

1 Display the screen.

1 [**System Menu/Counter**] key > [**User Login/Job Accounting**] > "Job Accounting Settings" [**Next**]

NOTE

If the login user name entry screen appears during operations, enter a login user name and password, and select [**Login**]. For this, you need to login with administrator privileges.

The factory default login user name and login password are set as shown below.

Model Name	Login User Name	Login Password
2552ci	2500	2500
3252ci	3200	3200
3552ci	3500	3500
4052ci	4000	4000
5052ci	5000	5000
6052ci	6000	6000

2 "Job Accounting (Local)" [**Next**] > "Default Setting" [**Next**] > "Count by Paper Size" [**Next**] > "Paper Size 1 (to 5)" [**Change**]

2 Configure the settings.

1 Select [**On**].

2 Select the paper size.

3 Select [**Media Type**] to specify media type.

4 Select the media type and select [**OK**].

5 Select [**OK**].

Counting the Number of Pages Printed

This counts the number of pages printed. Counts are classified into Total Job Accounting and Each Job Accounting. A new count can also be started after resetting the count data which was stored for a certain period of time.

1 Display the screen.

1 [**System Menu/Counter**] key > [**User Login/Job Accounting**] > "Job Accounting Settings" [**Next**]

NOTE

If the login user name entry screen appears during operations, enter a login user name and password, and select [**Login**]. For this, you need to login with administrator privileges.

The factory default login user name and login password are set as shown below.

Model Name	Login User Name	Login Password
2552ci	2500	2500
3252ci	3200	3200
3552ci	3500	3500
4052ci	4000	4000
5052ci	5000	5000
6052ci	6000	6000

2 "Job Accounting (Local)" [**Next**] > "Total Job Accounting" [**Next**] or "Each Job Accounting" [**Check**]

2 Configure the settings.

The table below lists the item you can view.

Item		Descriptions
Printed Pages		Displays the number of pages copied and printed, and the total number of pages used. You can also use [**FAX**][*1], [**Count by Paper Size**], [**by Duplex**] and [**by Combine**] to check the number of pages used.
	Copy (B & W)	Displays the number of pages used for black and white copying.
	Copy (Full Color)	Displays the number of pages used for full-color copying.
	Copy (Color)	Displays the number of pages used for color copying.
	Copy (Total)	Displays the number of pages copied.
	Printer (B & W)	Displays the number of pages used for black and white printing.
	Printer (Full Color)	Displays the number of pages used for color printing.
	Printer (Total)	Displays the number of pages printed.
	Copy/Printer (B/W)	Displays the total number of pages used for black-and-white copying and printing.

Item		Descriptions
	Copy/Print. (Color)	Displays the total number of pages used for full-color copying and printing.
	Copy/Print. (Total)	Displays the total number of pages used for copying and printing.
	FAX*1	Displays the number of pages received.
	Total	Displays the total number of pages used.
	Count by Paper Size	Displays the number of pages used in the selected paper size as well as the number of pages used in other paper sizes.
	Count by Duplex/ Combine	Displays the number of pages used in Duplex (1-sided) mode, Duplex (2-sided) mode and the total for both, as well as the pages used in Combine (None) mode, Combine (2in1) mode, Combine (4in1) mode and the total for all three.
Scanned Pages		Displays the number of pages scanned for copying, faxing and other functions, as well as the total number of pages scanned.
FAX TX Pages*1		Displays the number of pages faxed.
FAX TX Time*1		Displays the total duration of FAX transmissions.
Counter Reset		Resets the counter. Select [**Yes**] in the confirmation screen.

*1 Displayed only when the optional FAX Kit is installed.

Total Accounting

This counts the number of pages for all accounts and resets the counts for those accounts together at the same time.

1 Check the number of pages.

1 Select [**Check**] at the function to check the count.

The results will be displayed.

2 Confirm the count and select [**Close**].

Each Job Account

This counts the number of pages for each account and resets the counts by account. When checking Each Job Accounting, select the account for which you want to check the count.

1 Check the number of pages.

1 Select the account to check the count.

2 Select [**Detail**].

NOTE

- Select [**Name**] or [**ID**] from the "Sort" to sort the account names.
- Select [**Search(Name)**] or [**Search(ID)**] to search by account name or account ID. To display an account other than your own account, select [**Other Account**].

3 Select [**Check**] at the function to check the count.

The results will be displayed.

4 Confirm the count and select [**Close**].

Print Accounting Report

The total pages counted of all relevant accounts can be printed as an accounting report.

Reports have different formats depending on how the count of copiers and printers is administered.

When "Individual" is selected for Managing the Copy/Printer Count.

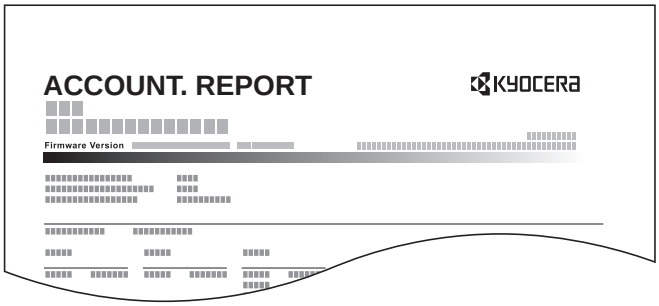

Use the procedure below to print a job accounting report.

1 Prepare paper.

Check that A4 or Letter paper is loaded in the cassette.

2 Display the screen.

[**System Menu/Counter**] key > [**User Login/Job Accounting**] > [**Job Accounting Settings**]

NOTE

If the login user name entry screen appears during operations, enter a login user name and password, and select [**Login**]. For this, you need to login with administrator privileges.

The factory default login user name and login password are set as shown below.

Model Name	Login User Name	Login Password
2552ci	2500	2500
3252ci	3200	3200
3552ci	3500	3500
4052ci	4000	4000
5052ci	5000	5000
6052ci	6000	6000

3 Print the report.

[**Print Accounting Report**] > [**Yes**]

Accounting report is printed.

Using Job Accounting

This section explains procedures while setting job accounting.

Login/Logout

If job accounting is enabled, an account ID entry screen appears each time you use this machine.

Login

1 In the account ID entry screen, enter the account ID using the numeric keys and select [**Login**].

NOTE

- If you entered a wrong character, select the [**Clear**] key and enter the account ID again.
- If the entered account ID does not match the registered ID, a warning beep will sound and login will fail. Enter the correct account ID.
- By selecting [**Check Counter**], you can refer to the number of pages printed and the number of pages scanned.

When the screen to enter the login user name and password appears

If user login administration is enabled, the screen to enter the login user name and password appears. Enter a login user name and password to login. If the user has already registered the account information, the account ID entry would be skipped.

Adding a User (Local User List) (page 9-8)

2 Proceed to complete the rest of the steps.

Logout

When the operations are complete, select the [**Authentication/Logout**] key to return to the account ID entry screen.

Apply Limit

This specifies how the machine behaves when the counter has reached the limit of restriction. The table below describes the action taken.

Item	Descriptions
Immediately[*1]	Job stops when the counter reaches its limit.
Subsequently	Printing/scanning of the job continues but the subsequent job will be rejected.
Alert Only	Job continues while displaying an alert message.

*1 The next job will be prohibited in sending or in storing in the box.

1 Display the screen.

1 [**System Menu/Counter**] key > [**User Login/Job Accounting**] > "Job Accounting Settings" [**Next**]

NOTE

If the login user name entry screen appears during operations, enter a login user name and password, and select [**Login**]. For this, you need to login with administrator privileges.

The factory default login user name and login password are set as shown below.

Model Name	Login User Name	Login Password
2552ci	2500	2500
3252ci	3200	3200
3552ci	3500	3500
4052ci	4000	4000
5052ci	5000	5000
6052ci	6000	6000

2 Select "Apply Limit" [**Change**].

2 Configure the settings.

Select [**Immediately**], [**Subsequently**], or [**Alert Only**] > [**OK**]

Copy/Printer Count

You can select how the copying and printing page counts are shown - either the total of both or each of copying and printing individually. The selection may influence restriction on the count and count method. For details, refer to the following:

- Restricting the Use of the Machine (page 9-39)
- Counting the Number of Pages Printed (page 9-49)
- Print Accounting Report (page 9-51)

1 Display the screen.

1 [**System Menu/Counter**] key > [**User Login/Job Accounting**] > "Job Accounting Settings" [**Next**]

NOTE

If the login user name entry screen appears during operations, enter a login user name and password, and select [**Login**]. For this, you need to login with administrator privileges.

The factory default login user name and login password are set as shown below.

Model Name	Login User Name	Login Password
2552ci	2500	2500
3252ci	3200	3200
3552ci	3500	3500
4052ci	4000	4000
5052ci	5000	5000
6052ci	6000	6000

2 Select "Copy/Printer Count" [**Change**].

2 Configure the settings.

Select [**Total**] or [**Individual**] > [**OK**]

Unknown User Settings

Unknown ID Job

This specifies the behavior for handling the jobs sent with unknown or unsent login user names or User ID. If the User Login is set to invalid and Job Accounting is set to valid, follow the procedure when the Account ID is unknown.

The setting items are as follows.

Item	Descriptions
Permit	The job is permitted to be printed.
Reject	The job is rejected (not printed).

1 Display the screen.

1 [**System Menu/Counter**] key > [**User Login/Job Accounting**]

NOTE

If the login user name entry screen appears during operations, enter a login user name and password, and select [**Login**]. For this, you need to login with administrator privileges.

The factory default login user name and login password are set as shown below.

Model Name	Login User Name	Login Password
2552ci	2500	2500
3252ci	3200	3200
3552ci	3500	3500
4052ci	4000	4000
5052ci	5000	5000
6052ci	6000	6000

2 "Unknown User Setting" [**Next**] > [**Unknown ID Job**].

2 Configure the settings.

Select [**Permit**] or [**Reject**].

Registering Information for a User whose ID is Unknown

If you register user information for a user whose ID is unknown, you can check information on the Job Status or Job History screens. In addition, you can restrict available functions.

NOTE

This function is displayed when [**Unknown ID Job**] is set to [**Permit**].

1 Display the screen.

1 [**System Menu/Counter**] key > [**User Login/Job Accounting**]

NOTE

If the login user name entry screen appears during operations, enter a login user name and password, and select [**Login**]. For this, you need to login with administrator privileges.

The factory default login user name and login password are set as shown below.

Model Name	Login User Name	Login Password
2552ci	2500	2500
3252ci	3200	3200
3552ci	3500	3500
4052ci	4000	4000
5052ci	5000	5000
6052ci	6000	6000

2 "Unknown User Setting" [**Next**] > [**User Property**].

2 Enter the user information.

Enter the user information > [**OK**]

Item	Descriptions
User Name	Enter the name displayed on the user list (up to 32 characters).

Item	Descriptions
Account Name	Register an account for a user whose ID is unknown. Overview of Job Accounting (page 9-34) **NOTE** • Select [Name] or [ID] from the "Sort" to sort the account list. • Select [Search(Name)] or [Search(ID)] to search by account name or account ID.
Authorization Rules	Set usage authority. The following restriction items are available: **Print Restriction**: Select whether or not use of the print function of the printer is prohibited. **Print Restriction (Color)**: Select whether or not use of the print function (color) of the printer is prohibited.

10 Troubleshooting

This chapter explains the following topics:

Regular Maintenance 10-2
Cleaning 10-2
Cleaning Glass Platen 10-2
Cleaning inside of the Document Processor 10-2
Cleaning Slit Grass 10-3
Toner Container Replacement 10-4
Replace the Waste Toner Box 10-7
Loading Paper 10-9
Replacing Staples (Inner Finisher) .. 10-10
Replacing Staples (1,000-Sheet Finisher) 10-12
Replacing Staples (4,000-Sheet Finisher) 10-13
Replacing Staples (Folding Unit) 10-15
Disposing of the Punch Waste 10-17
Troubleshooting 10-23
Solving Malfunctions 10-23
Machine Operation Trouble 10-23
Printed Image Trouble 10-28
Color Printing Trouble 10-31
Responding to Messages 10-32
Adjustment/Maintenance 10-50
Overview of Adjustment/ Maintenance 10-50
Color Registration Procedure 10-50
Tone Curve Adjustment 10-54
Drum Refresh 10-55
Calibration 10-55
Laser Scanner Cleaning 10-56
Developer Refresh 10-56
Clearing Paper Jams 10-57
Jam Location Indicators 10-57
Remove any jammed paper in Cassette 1 10-58
Remove any jammed paper in Cassette 2 10-61
Remove any jammed paper in Cassette 3 and 4 (500-sheet×2) 10-64
Remove any jammed paper in Cassette 3 (1,500-sheet×2) 10-66
Remove any jammed paper in Cassette 4 (1,500-sheet×2) 10-68
Remove any jammed paper in Cassette 5 (Side Feeder) 10-71
Remove any jammed paper in the Multi Purpose Tray 10-73
Remove any jammed paper in Right Cover 1 10-74
Remove any jammed paper in Right Cover 2 (500-sheet×2) 10-78
Remove any jammed paper in Right Cover 2 (1,500-sheet×2) 10-79
Remove any jammed paper in the Bridge Unit 10-81
Remove any jammed paper in the Mailbox 10-82
Remove any jammed paper in the Inner Finisher 10-83
Remove any jammed paper in the Document Processor (Reverse Automatic) 10-84
Remove any jammed paper in the Document Processor (Dual Scan) .. 10-86
Remove any jammed paper in the 1,000-Sheet Finisher 10-87
Remove any jammed paper in the 4,000-sheet Finisher (Inner) 10-90
Remove any jammed paper in the 4,000-sheet Finisher (Tray A) 10-91
Remove any jammed paper in the 4,000-sheet Finisher (Tray B) 10-95
Remove any jammed paper in the Folding Unit 10-98
Remove any jammed paper in the Folding Tray 10-103
Clearing a Staple Jam 10-108
Clearing a Staple Jam of the Inner Finisher 10-108
Clearing a Staple Jam of the 1,000-Sheet Finisher 10-110
Clearing a Staple Jam of the 4,000-Sheet Finisher 10-113
Clearing a Staple Jam of the Folding Unit 10-115

Regular Maintenance

Cleaning

Clean the machine regularly to ensure optimum printing quality.

CAUTION

For safety, always unplug the power cord before cleaning the machine.

Cleaning Glass Platen

Wipe the backside of the original cover, the inside of the document processor and the glass platen with a soft cloth dampened with alcohol or mild detergent.

IMPORTANT

Do not use thinner or other organic solvents.

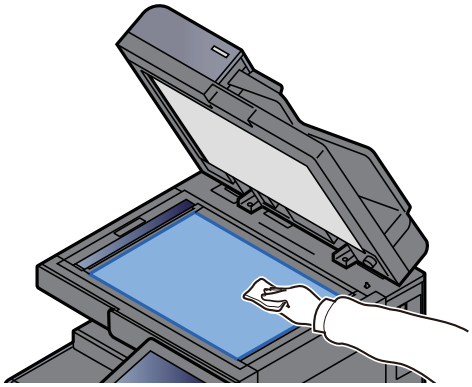

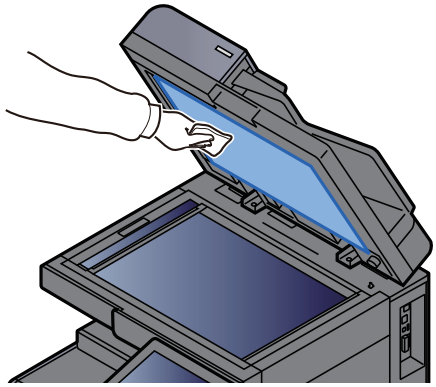

Cleaning inside of the Document Processor

When using the document processor that features dual scanning, clean the dual scanning unit with the supplied cleaning cloth.

IMPORTANT

Do not use thinner or other organic solvents.

1 Remove the cloth from the cleaning cloth compartment.

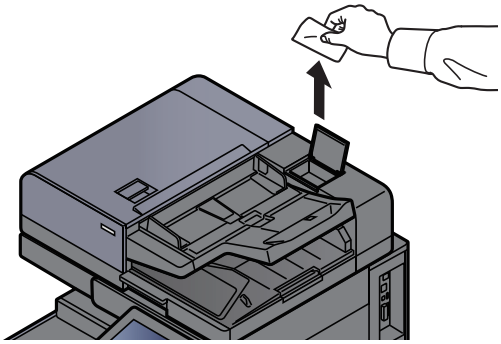

2 Clean inside of the document processor.

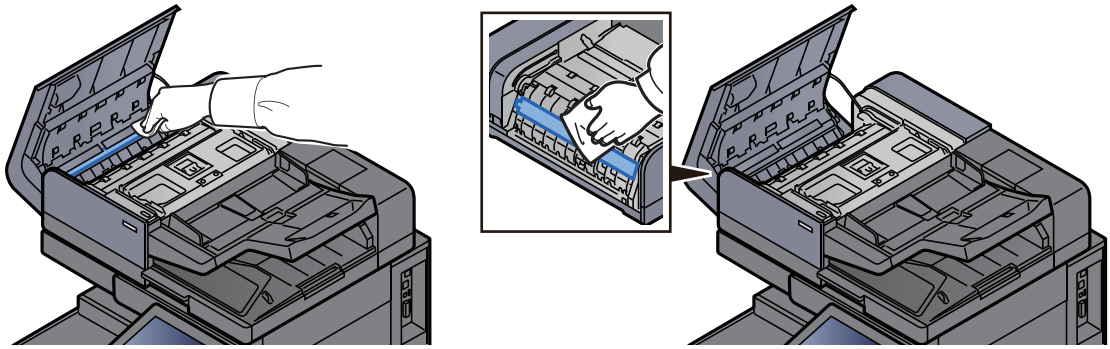

Cleaning Slit Grass

When using the document processor, clean the slit glass surface and the reading guide with the supplied cleaning cloth.

IMPORTANT

Do not use water, soap or solvents for cleaning.

NOTE

Dirt on the slit glass or the reading guide may cause black streaks to appear in the output.

1 Remove the cloth from the cleaning cloth compartment.

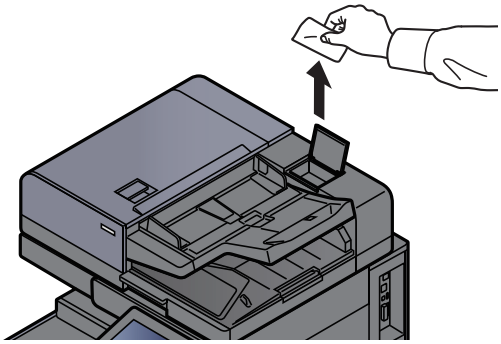

2 Clean the slit glass surface and the reading guide.

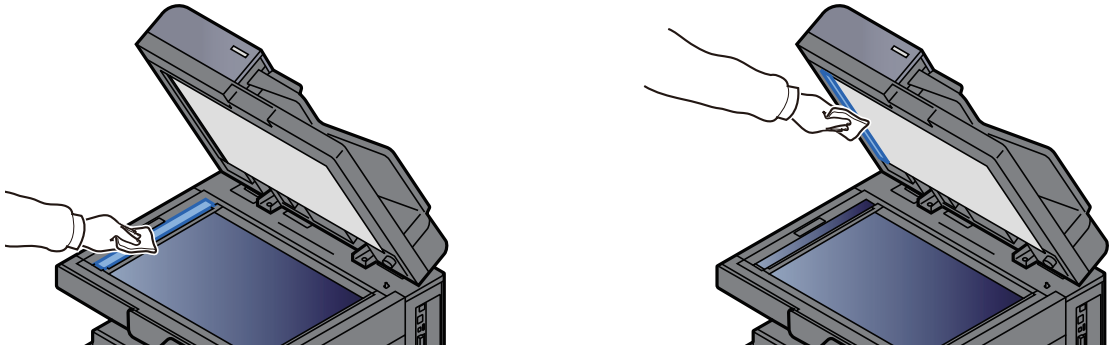

Toner Container Replacement

When toner is empty, the following message will be displayed.

"Toner [C][M][Y][K] are empty."

When toner runs low, the following message will be displayed. Make sure you have a new toner container available for replacement.

"Toner is low. [C][M][Y][K] (Replace when empty.)"

NOTE

- For the toner container, always use a genuine toner container. Using a toner container that is not genuine may cause image defects and product failure.
- The memory chip in the toner container of this product stores information necessary for improving customer convenience, operation of the recycling system for used toner containers, and planning and development of new products. The stored information does not include information that makes it possible to identify individuals, and is only used anonymously for the above purposes.

CAUTION

Do not attempt to incinerate parts which contain toner. Dangerous sparks may cause burns.

Installation procedures of the toner container is same for every color. Here, we'll explain the procedures for the yellow toner container, as an example.

1 Open the front cover.

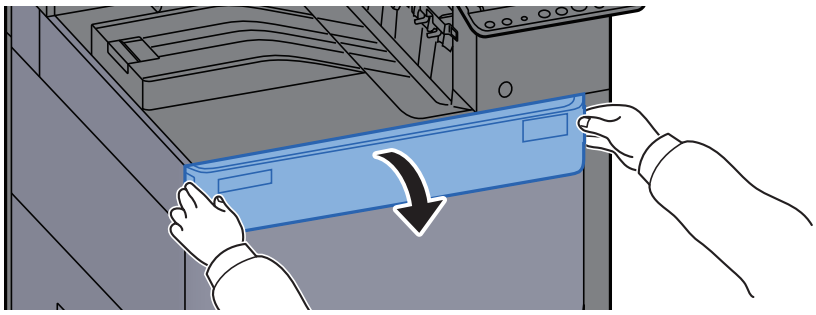

The cover of the empty toner container is open.

NOTE

If you close the toner container cover before replacing the container, select [**Open Toner Container Cover**].

2 Remove the toner container.

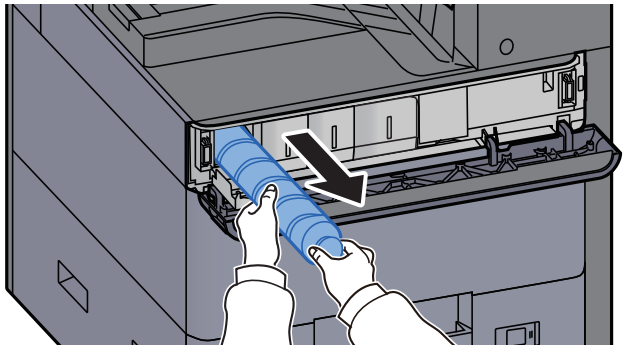

3 Put used toner container into the plastic waste bag.

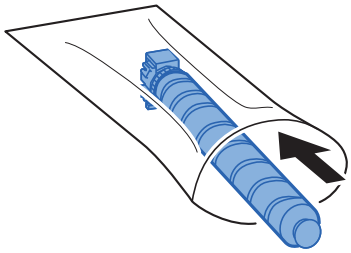

4 Remove the new toner container from the box.

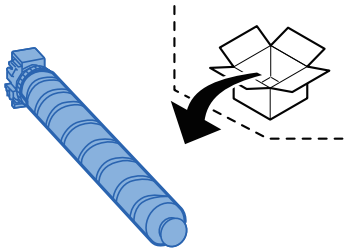

IMPORTANT

Do not touch the points shown below.

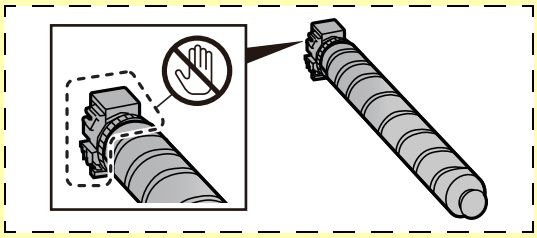

5 Tap the toner container.

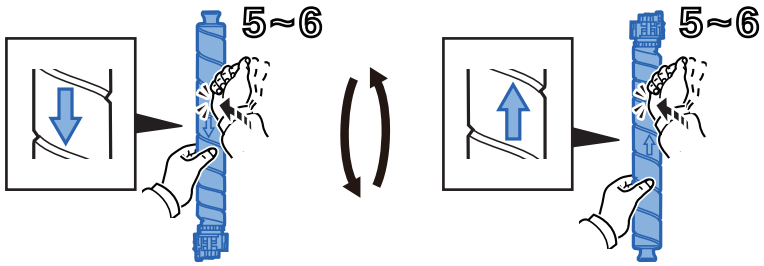

6 Shake the toner container.

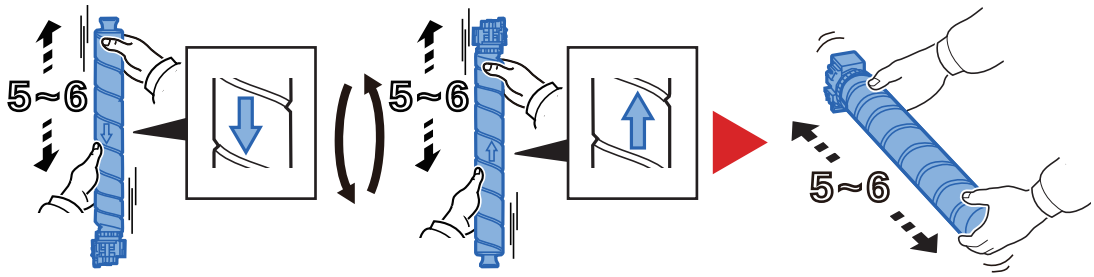

7 Install the toner container.

IMPORTANT

Insert the toner container all the way.

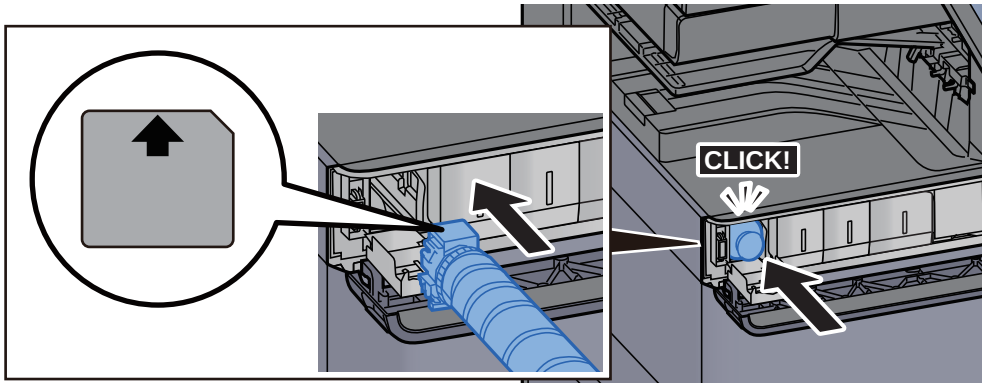

8 Close the toner container cover.

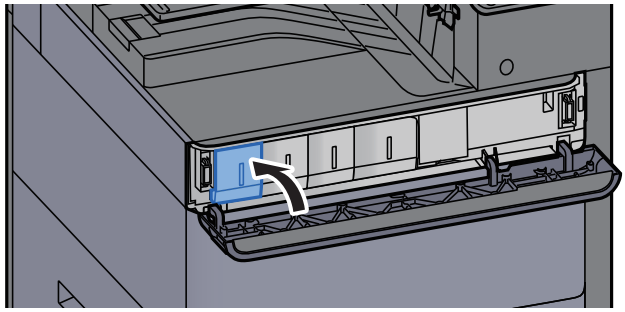

9 Close the front cover.

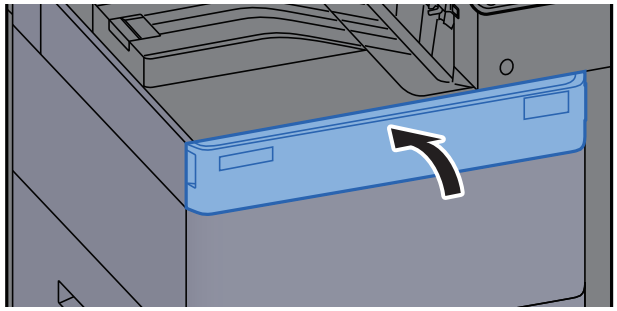

NOTE

- If the toner container cover or front cover does not close, check that the new toner container is installed correctly.
- Return the exhausted toner container to your dealer or service representative. The collected toner container will be recycled or disposed in accordance with the relevant regulations.

Replace the Waste Toner Box

When the waste toner box is full, the following message will be displayed. Immediately replace the waste toner box.

"Waste toner box is full."

CAUTION

Do not attempt to incinerate parts which contain toner. Dangerous sparks may cause burns.

1 Open the waste toner box cover.

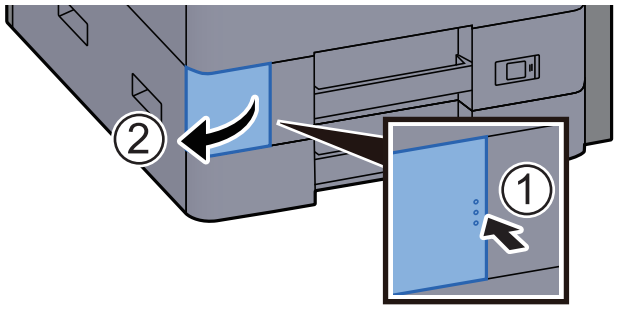

2 Remove the Waste Toner Box.

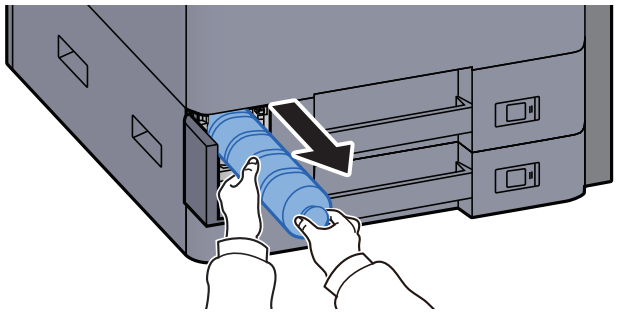

3 Put used Waste Toner Box into the plastic waste bag.

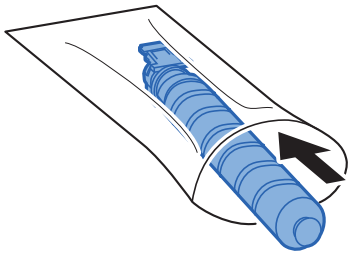

4 Remove the new Waste Toner Box.

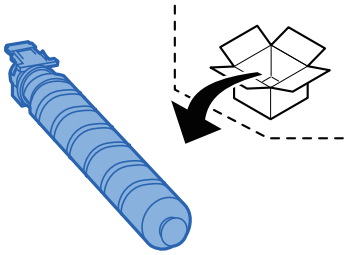

5 Install the Waste Toner Box.

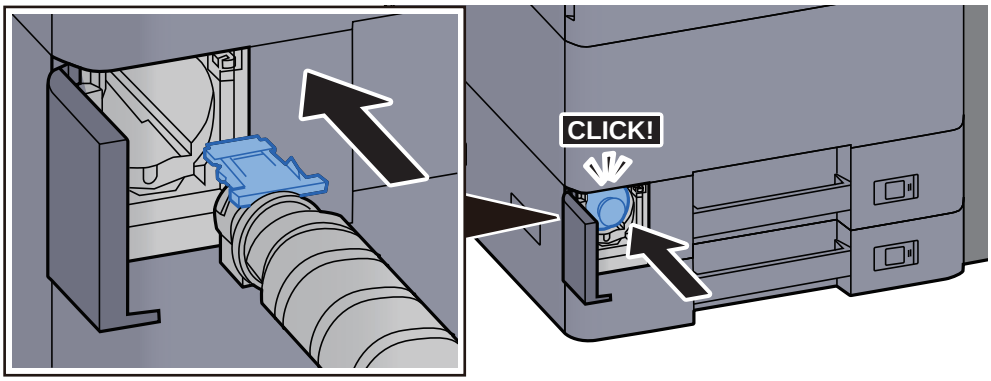

6 Close the waste toner box cover.

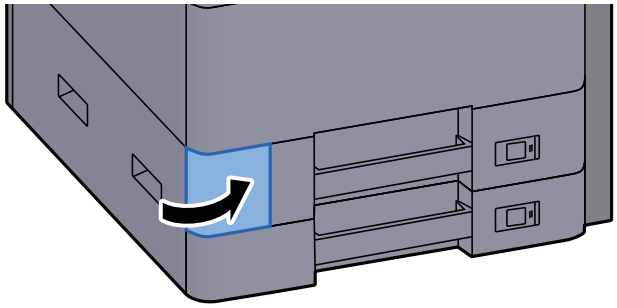

NOTE

Return the exhausted waste toner box to your dealer or service representative. The collected waste toner box will be recycled or disposed in accordance with the relevant regulations.

Loading Paper

When Cassette # runs out of paper, the following messages will be displayed.

"Add paper in cassette #."

"Add paper in Multi Purpose tray."

- Loading in Cassette 1 (page 3-4)
- Loading in Cassette 2 (page 3-7)
- Loading Paper in the Multi Purpose Tray (page 5-7)

NOTE

If [**Show Paper Setup Message**] is set to [**On**], the confirmation screen for the paper setting will be displayed when a new paper is set. If a paper is changed, select [**Change**] and then change the settings of the paper.

- Cassette 1 (to 5) (page 8-7)
- MP Tray Setting (page 8-8)

Replacing Staples (Inner Finisher)

When the Staple Unit runs out of staples, the following messages will be displayed. The staple cartridge holder need to be replenished with staples.

"Staple is empty."

NOTE

If the Staple Unit runs out of staples, contact your dealer or service representative.

1 Open the inner finisher unit.

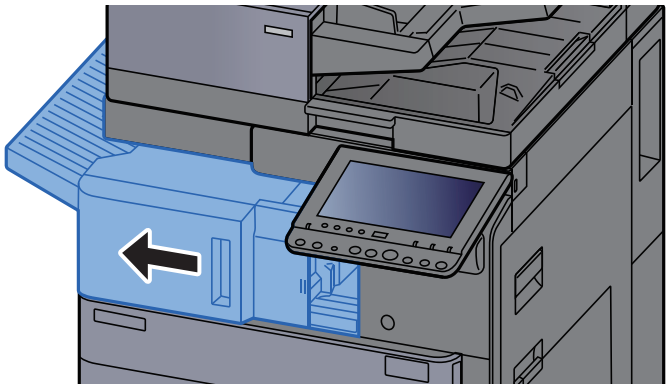

2 Open the staple cover.

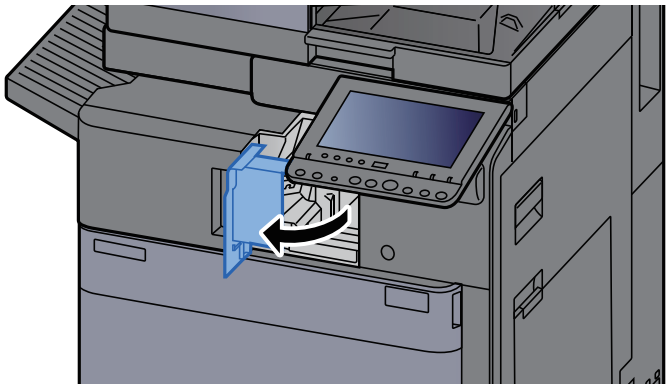

3 Remove the Staple Cartridge Holder.

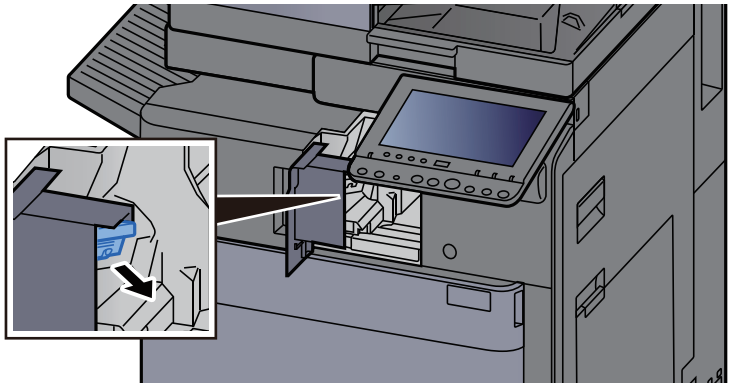

4 **Replace the staples.**

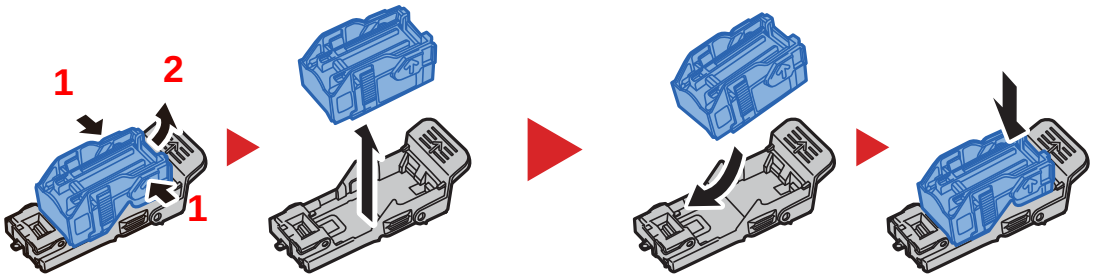

5 **Install the Staple Cartridge Holder.**

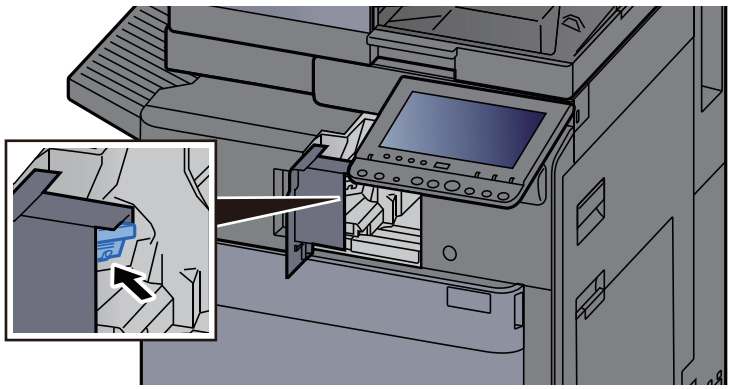

6 **Return the staple cover to the original position.**

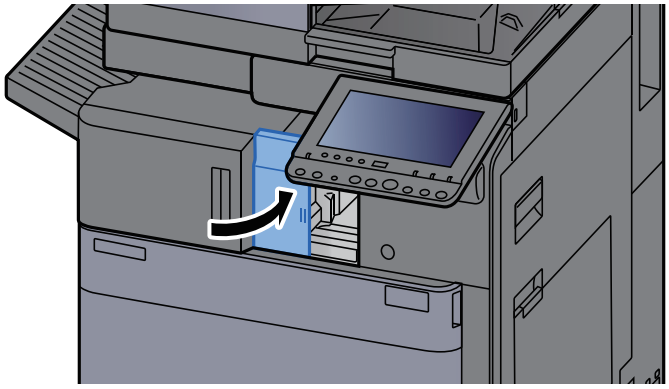

7 **Return the unit to the original position.**

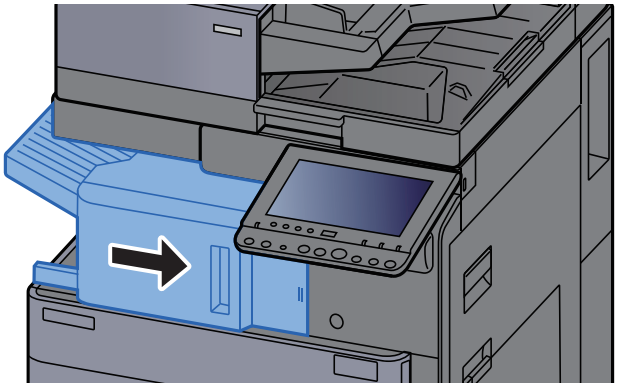

Replacing Staples (1,000-Sheet Finisher)

When the Staple Unit runs out of staples, the following messages will be displayed. The staple cartridge holder need to be replenished with staples.

"Staple is empty."

NOTE

If the Staple Unit runs out of staples, contact your dealer or service representative.

1 Open the finisher front cover.

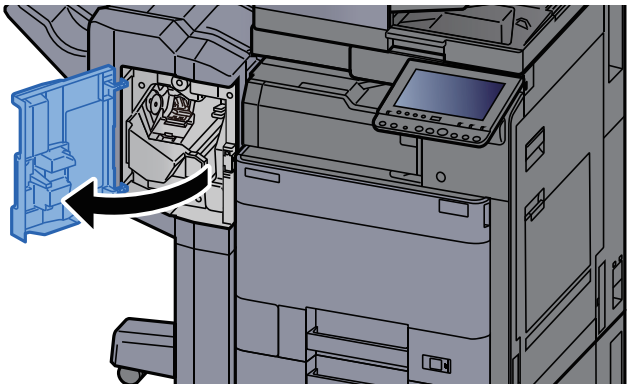

2 Remove the Staple Cartridge Holder.

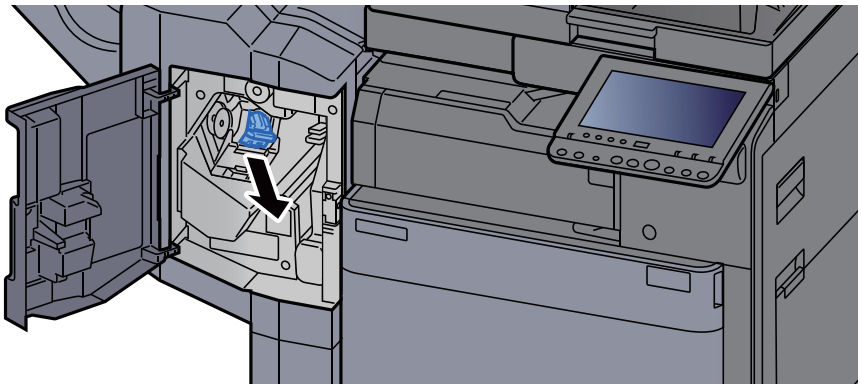

3 Replace the staples.

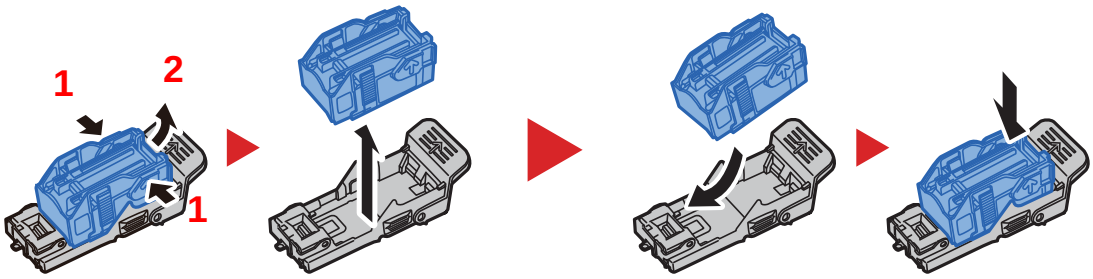

4 Install the Staple Cartridge Holder.

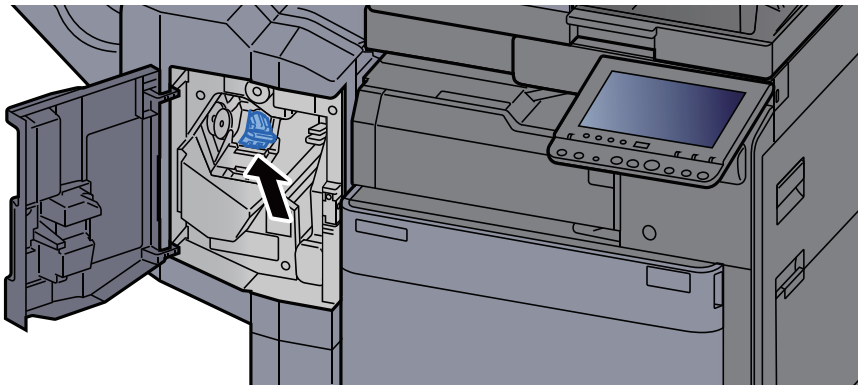

5 Close the cover.

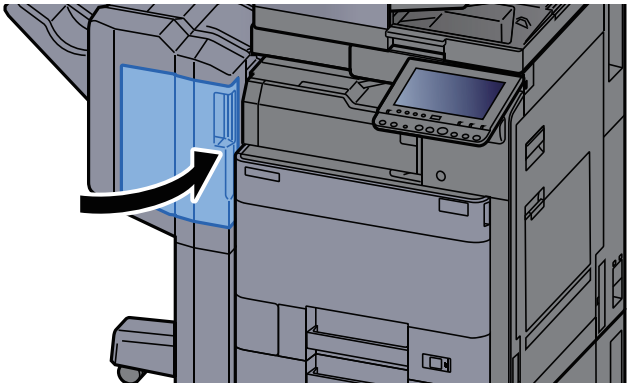

Replacing Staples (4,000-Sheet Finisher)

When the Staple Unit runs out of staples, the following messages will be displayed. The staple cartridge holder need to be replenished with staples.

"Staple is empty."

NOTE

If the Staple Unit runs out of staples, contact your dealer or service representative.

1 Open the finisher front cover 1.

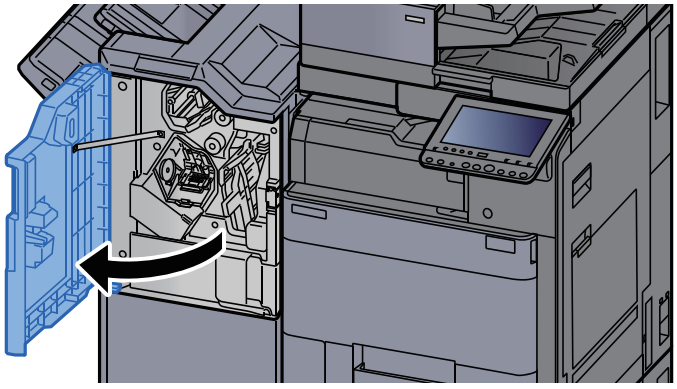

2 **Remove the Staple Cartridge Holder (A).**

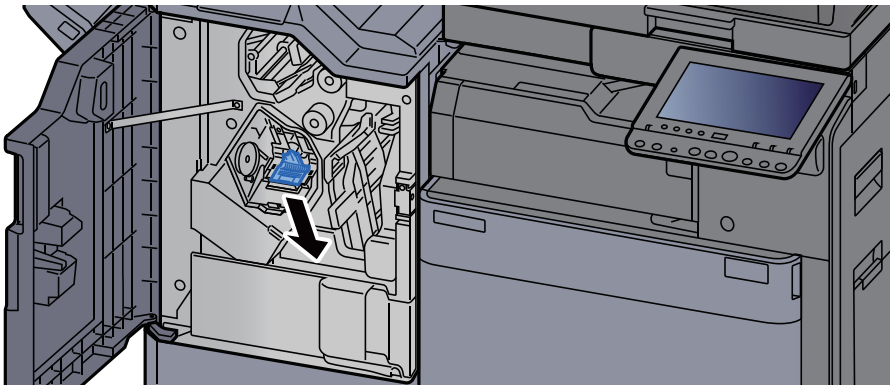

3 **Replace the staples.**

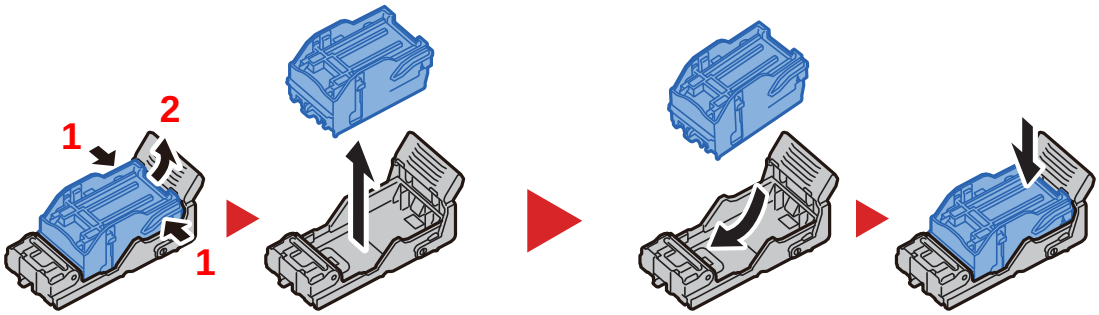

4 **Install the Staple Cartridge Holder (A).**

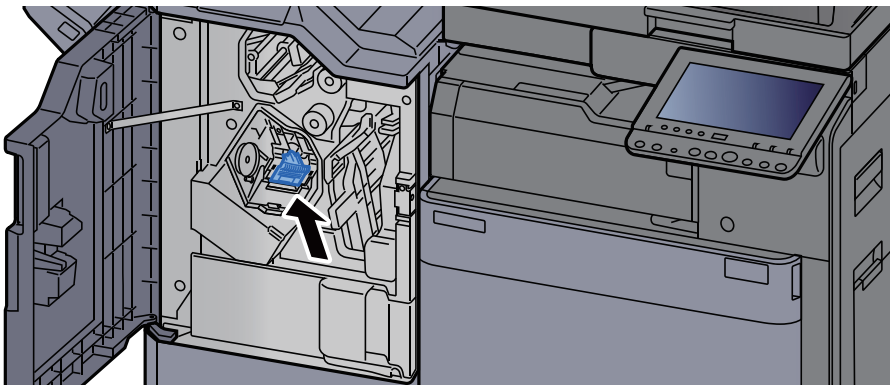

5 **Close the cover.**

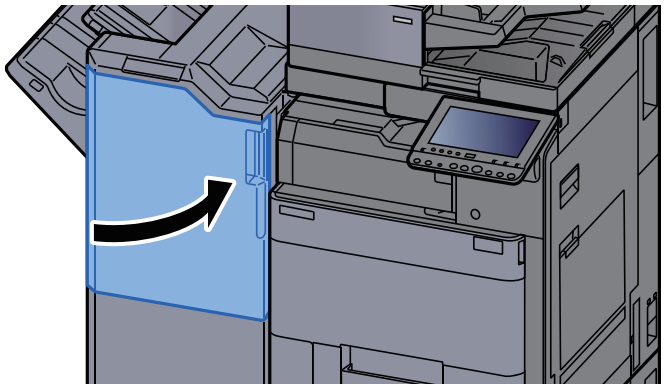

Replacing Staples (Folding Unit)

When the Staple Unit runs out of staples, the following messages will be displayed. The staple cartridge holder need to be replenished with staples.

"Staple is empty."

NOTE

If the Staple Unit runs out of staples, contact your dealer or service representative.

1 Open the finisher front cover 1 and 2.

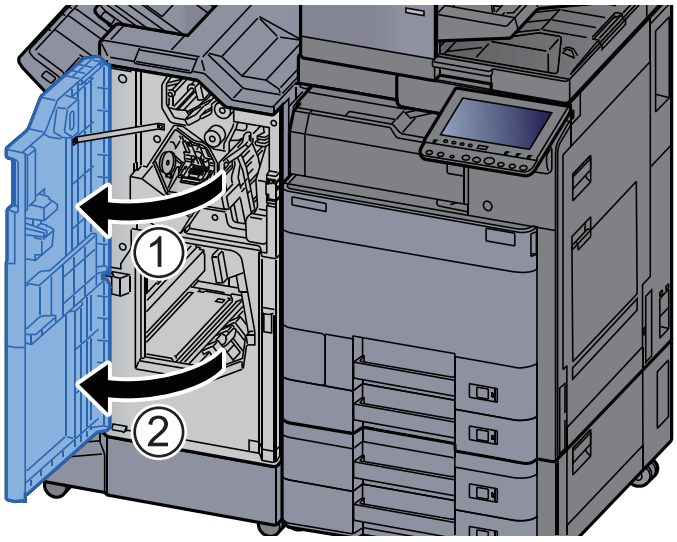

2 Remove the Staple Cartridge Holder (B) or (C).

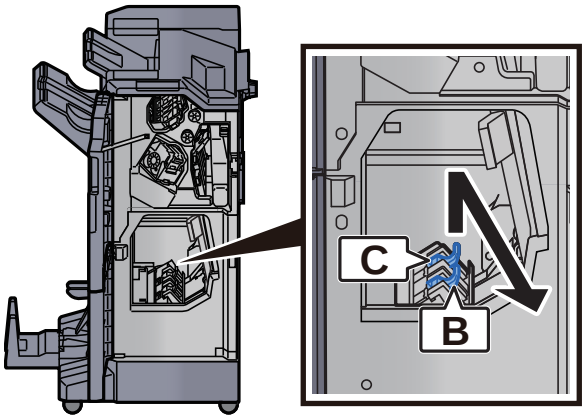

3 Replace the staples.

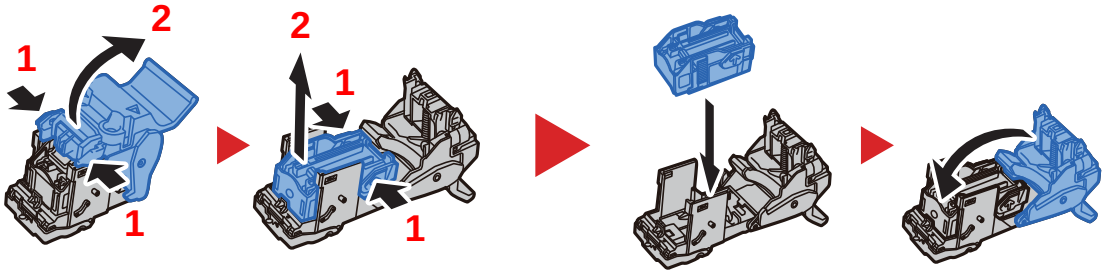

4 **Install the Staple Cartridge Holder (B) or (C).**

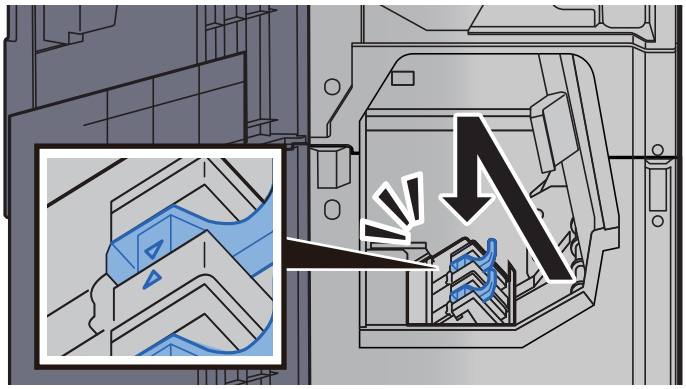

5 **Close the covers.**

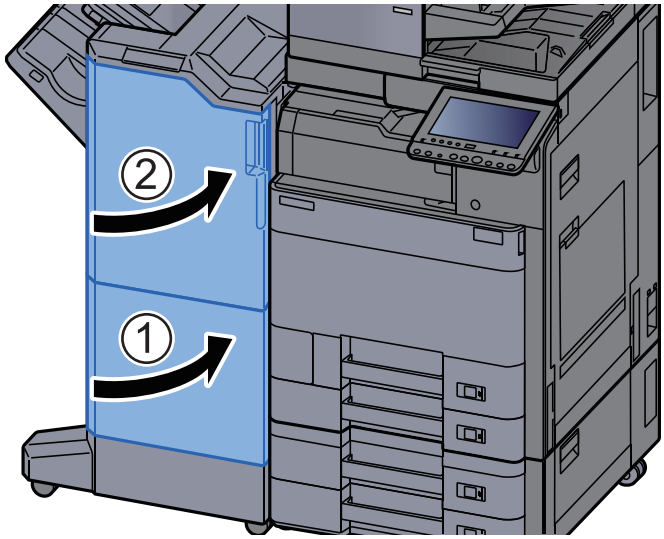

Disposing of the Punch Waste

When the waste punch box is full, the following messages will be displayed. Empty the punch waste box.

"Empty the punch waste box."

Leave the power switch on the machine switched ON while performing this procedure.

Inner Finisher

1 Open the inner finisher unit.

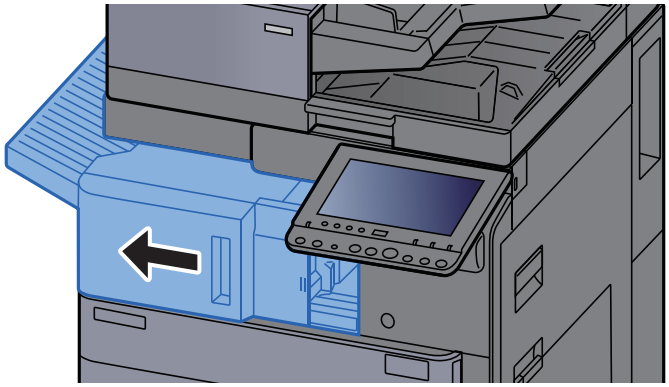

2 Remove the Punch Waste Box.

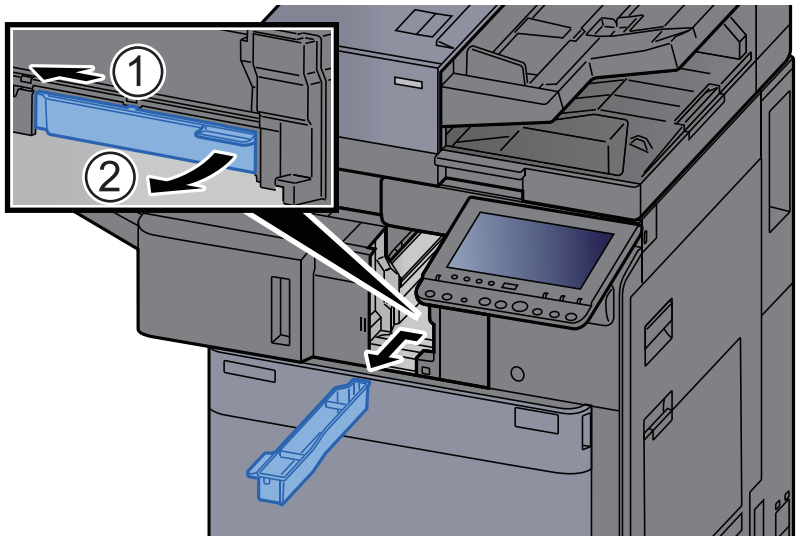

NOTE

Take care not to spill the waste hole punch scraps when removing the box.

3 **Empty the Punch Waste Box.**

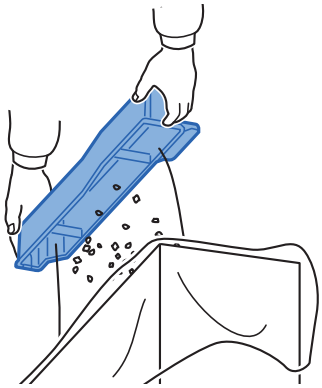

4 **Install the Punch Waste Box.**

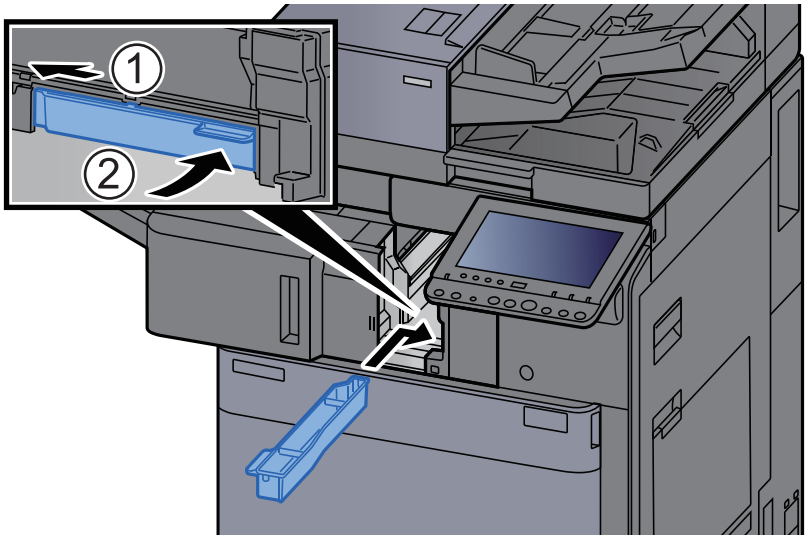

5 **Return the unit to the original position.**

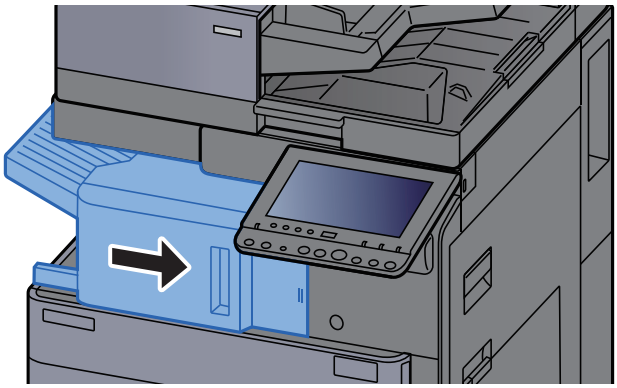

1,000-Sheet Finisher

1 Open the finisher front cover.

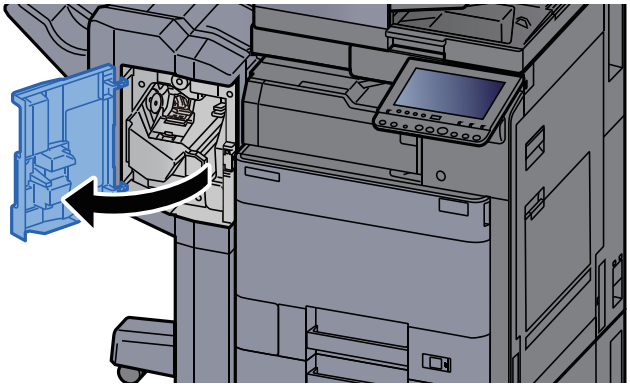

2 Remove the Punch Waste Box.

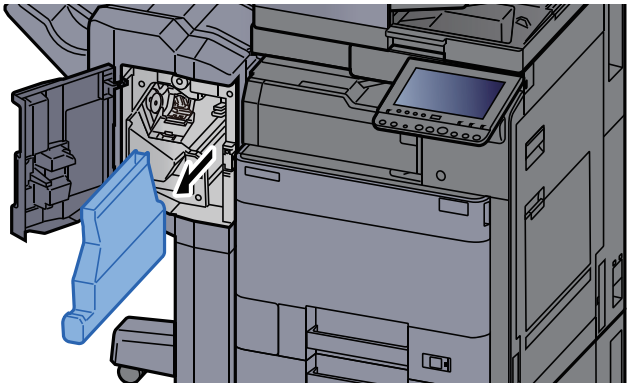

NOTE

Take care not to spill the waste hole punch scraps when removing the box.

3 Empty the Punch Waste Box.

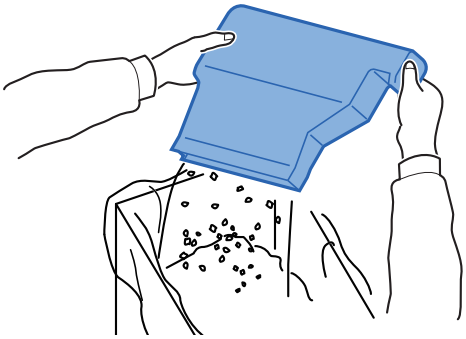

4 **Install the Punch Waste Box.**

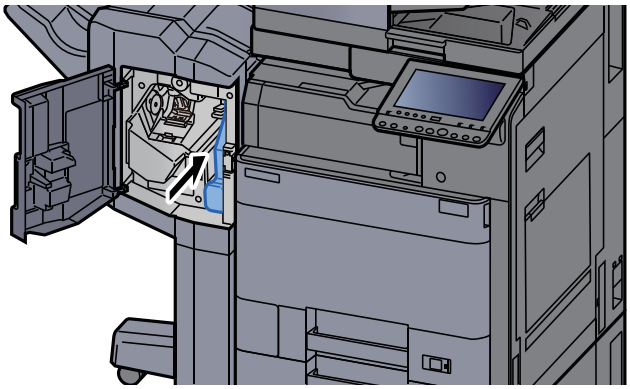

5 **Close the cover.**

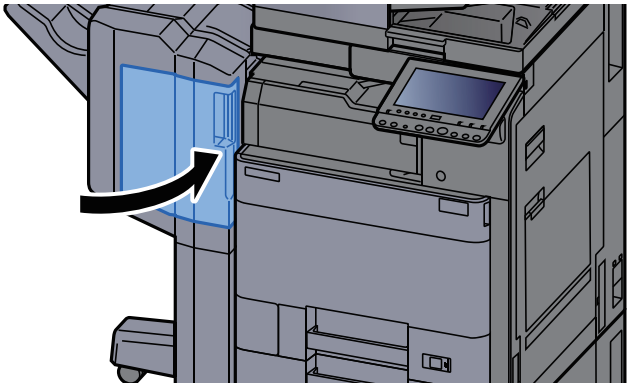

4,000-Sheet Finisher

1 **Open the finisher front cover 1.**

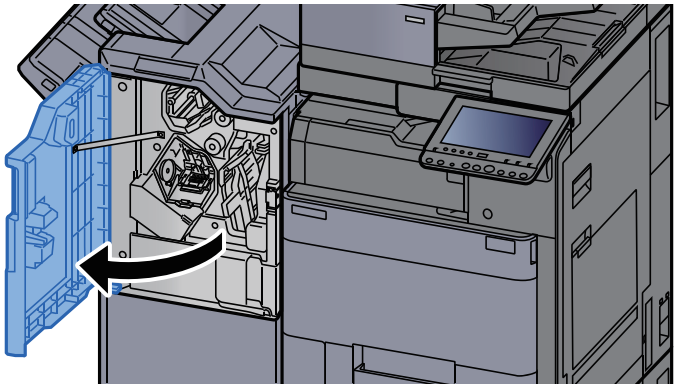

2 Remove the Punch Waste Box.

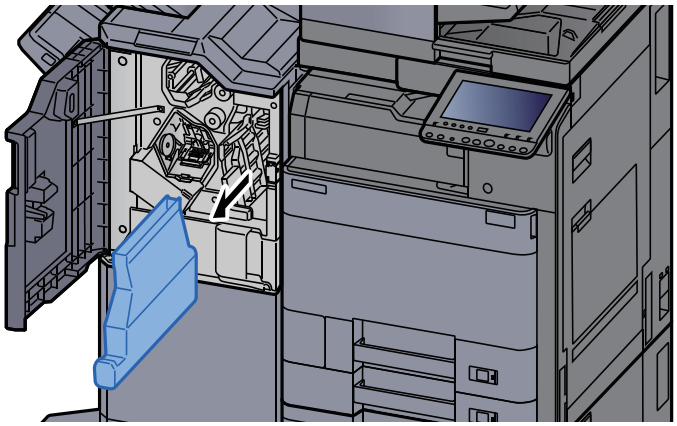

NOTE

Take care not to spill the waste hole punch scraps when removing the box.

3 Empty the Punch Waste Box.

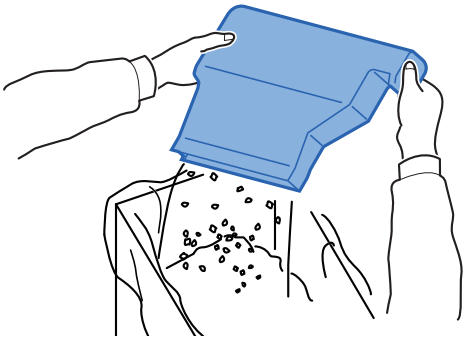

4 Install the Punch Waste Box.

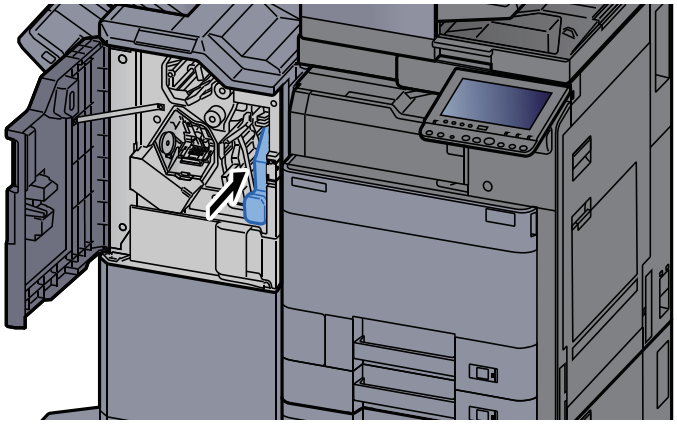

5 **Close the cover.**

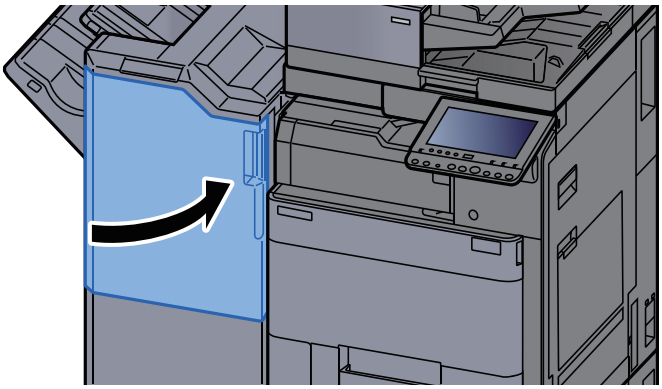

Troubleshooting

Solving Malfunctions

The table below provides general guidelines for problem solving.

If a problem occurs with your machine, look into the checkpoints and perform procedures indicated on the following pages. If the problem persists, contact your Service Representative.

NOTE

When contacting us, the serial number will be necessary.
To check the serial number, refer to the following:

Display for Device Information (page 2-18)

Machine Operation Trouble

When the following machine operation troubles occur, implement appropriate procedures.

Symptom	Checkpoints	Corrective Actions	Reference Page
An application does not start.	Is the Auto Panel Reset time short?	Set the Auto Panel Reset time to 30 seconds or more.	page 8-69
The screen does not respond when the power switch is turned on.	Is the machine plugged in?	Plug the power cord into an AC outlet.	—
	Is the machine powered on?	Turn on the main power switch.	page 2-2
Pressing the [**Start**] key does not produce copies.	Is there a message on the screen?	Determine the appropriate response to the message and respond accordingly.	page 10-32
	Is the machine in Sleep mode?	Select any key on the operation panel to recover the machine from Sleep mode.	page 2-39
Blank sheets are ejected. 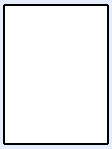	Are the originals loaded correctly?	When placing originals on the platen, place them face-down and align them with the original size indicator plates.	page 5-2
		When placing originals in the document processor, place them face-up.	page 5-4
	—	Check that the settings of the application software.	—

Symptom	Checkpoints	Corrective Actions	Reference Page
Paper often jams.	Is the paper loaded correctly?	Load the paper correctly.	page 3-4
	—	Turn the orientation 180 degrees around in which the paper is positioned.	page 3-4
	Is the paper of the supported type? Is it in good condition?	Remove the paper, turn it over, and reload it.	page 3-4
	Is the paper curled, folded or wrinkled?	Replace the paper with new paper.	page 3-4
	Are there any loose scraps or jammed paper in the machine?	Remove any jammed paper.	page 10-57
2 or more sheets are overlaps when ejected. (multi feed) 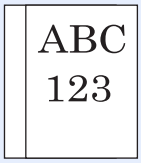	—	Load the paper correctly.	page 3-2
Printouts are wrinkled. 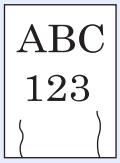	Is the paper loaded correctly?	Load the paper correctly.	page 3-4
	—	Turn the orientation 180 degrees around in which the paper is positioned.	page 3-4
	Is the paper damp?	Replace the paper with new paper.	page 3-4
Printouts are curled. 	Is the paper damp?	Replace the paper with new paper.	page 3-4
Printer driver cannot be installed.	Is the driver installed with the host name while Wi-Fi or Wi-Fi Direct function is available?	Specify the IP address instead of the host name.	page 2-47

Symptom	Checkpoints	Corrective Actions	Reference Page
Cannot print.	Is the machine plugged in?	Plug the power cord into an AC outlet.	—
	Is the machine powered on?	Turn on the main power switch.	page 2-2
	Are the USB cable and network cable connected?	Connect the correct USB cable and network cable securely.	page 2-7
	Is the print job paused?	Resume printing.	page 7-11
	When the wired or Wi-Fi network is configured using the name resolution, does the IP address (private address) of the other network which can not access coexists?	The number of host name and domain name which can be used with the machine is one respectively. Configure the network under this restriction.	—
		Change the settings of name resolution such as NetBEUI and DNS, or network environment settings.	**Command Center RX User Guide**
		Select Wi-Fi, Wired Network or Optional Network as an unlimited-use network on Primary Network (Client).	page 8-62
		Set to [**Wired Network**] or [**Wi-Fi**] either one of [**On**], and set the other setting to [**Off**].	page 8-55
Cannot print with USB memory.	Is the USB host blocked?	Select [**Unblock**] in the USB host settings.	page 8-63
USB memory not recognized.	—	Check that the USB memory is securely plugged into the machine.	—
While "Auto-IP" is already set to [**On**], the IP address is not assigned automatically.	Is a value other than "0.0.0.0" entered for the link local address of TCP/IP(v4)?	Enter "0.0.0.0" for the IP address of TCP/IP(v4).	page 2-30

Symptom	Checkpoints	Corrective Actions	Reference Page
Cannot send via SMB.	Is the network cable connected?	Connect the correct network cable securely.	page 2-7
	Have the network settings for the equipment been configured properly?	Configure the TCP/IP settings properly.	page 8-49
	Have the folder sharing settings been configured properly?	Check sharing settings and access privileges under the folder properties.	page 3-22
	Is the selected interface selected as the Primary Network?	Specify the host name or IP address of the interface selected as the Primary Network, or set the interface to be used again.	page 8-62
	Has the SMB protocol been set to [**On**]?	Set the SMB protocol setting to [**On**].	page 8-55
	Has [**Host Name**] been entered properly? *1	Check the name of the computer to which data is being sent.	page 5-26
	Has [**Path**] been entered properly?	Check the share name for the shared folder.	page 5-26
	Has [**Login User Name**] been entered properly? *1 *2	Check the domain name and login user name.	page 5-26
	Has the same domain name been used for [**Host Name**] and [**Login User Name**]?	Delete the domain name and backslash ("/") from [**Login User Name**].	page 5-26
	Has [**Login Password**] been entered properly?	Check the login password.	page 5-26
	Have exceptions for Windows Firewall been configured properly?	Configure exceptions for Windows Firewall properly.	page 3-25
	Do the time settings for the equipment, domain server, and data destination computer differ?	Set the equipment, domain server, and data destination computer to the same time.	—
	Is the screen displaying Send error?	Refer to Responding to Send Error.	page 10-45
Cannot connect to this machine by using Wi-Fi Direct.	Are three handheld devices connected simultaneously?	Release the connection of handheld devices being connected manually or set a connection after setting the connection time and releasing the connection by automatic disconnection.	page 8-51
Cannot send via the e-mail.	Is the E-mail send size limit set in the SMTP server registered on the machine?	Check the limit value is entered to "E-mail Size Limit" of [**E-mail**] setting in Command Center RX and change the value as necessary.	page 2-65

Symptom	Checkpoints	Corrective Actions	Reference Page
The machine is emitting steam in the area around the paper ejection slot.	Check the room temperature to see if it is low, or if damp paper was used.	Depending on the printing environment and the paper's condition, the heat generated during printing will cause the moisture in the paper to evaporate, and the steam emitted may look like smoke. This is not a problem, and you can continue printing. If the steam concerns you, raise the room temperature, or replace the paper with a newer, dryer paper.	—

*1 You can also enter a full computer name as the host name (for example, pc001.abcdnet.com).
*2 You can also enter login user names in the following formats:
Domain_name/user_name (for example, abcdnet/james.smith)
User_name@domain_name (for example, james.smith@abcdnet)

Printed Image Trouble

When the following printed image trouble occurs, implement appropriate procedures.

Symptom	Checkpoints	Corrective Actions	Reference Page
Printouts are totally too light. 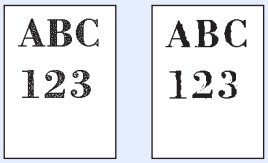	Is the paper damp?	Replace the paper with new paper.	page 3-2
	Have you changed the density?	Select appropriate density level.	page 6-31 page 8-72
	Is EcoPrint mode enabled?	Disable [**EcoPrint**] mode.	page 8-19
	—	Run [**Developer Refresh**].	page 10-56
	—	Run [**Laser Scanner Cleaning**].	page 10-56
	—	Make sure the paper type setting is correct for the paper being used.	page 8-15
White background parts of the image appear to have a slight overall coloration. 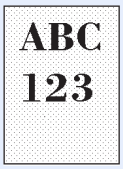	Have you changed the density?	Select appropriate density level.	page 6-31 page 8-72
	—	Run [**Calibration**].	page 10-55
	Is your machine 2552ci or 3252ci?	Perform the drum refresh, and then set [**Drum Heater**] to [**On**].	page 10-55 page 8-72
Copies have a moire pattern (dots grouped together in patterns and not aligned uniformly). 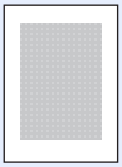	Is the original a printed photograph?	Set the original image to [**Printer Output**] or [**Book/ Magazine**] in [**Photo**].	page 6-31
Texts are not clearly printed. 	Did you choose appropriate image quality for the original?	Select appropriate image quality.	page 6-31

Symptom	Checkpoints	Corrective Actions	Reference Page
Black or color dots appear on the white background when white original is scanned. 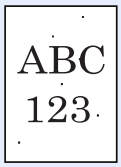	Is the original holder or the glass platen dirty?	Clean the original holder or the glass platen.	page 10-2
	—	Run [**Developer Refresh**].	page 10-56
Printouts are fuzzy. Printouts are cut off. 	Is the device used in an environment with high humidity or where the temperature or humidity changes suddenly?	Use in an environment that has suitable humidity.	—
		Set [**Drum Heater**] to [**On**].	page 8-72
	—	Run [**Drum Refresh**].	page 10-55
Images are skewed. 	Are the originals placed correctly?	When placing originals on the platen, align them with the original size indicator plates.	page 5-2
		When placing originals in the document processor, align the original width guides securely before placing the originals.	page 5-4
	Is the paper loaded correctly?	Check the position of the paper width guides.	page 3-4
Printouts have vertical lines. 	Is the slit glass dirty?	Clean the slit glass.	page 10-3
	—	Run [**Laser Scanner Cleaning**].	page 10-56
Dirt on the top edge or back of the paper. 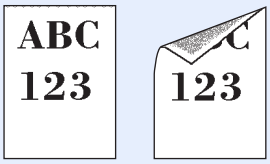	Is the interior of the machine dirty?	Open the right cover. If the machine interior is dirty with toner, clean it using soft, dry, lint-free cloth.	page 10-2

Symptom	Checkpoints	Corrective Actions	Reference Page
Part of the image is periodically faint or shows white lines. 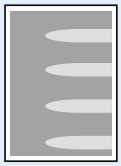	—	Open and then close the right cover.	—
	—	Run [**Drum Refresh**].	page 10-55
	—	Run [**Developer Refresh**].	page 10-56
Print on the back of the sheet is visible on the front. 	—	Set [**Prevent Bleed-through**] to [**On**].	page 6-40 page 8-19

Color Printing Trouble

When the following color printing trouble occurs, implement appropriate procedures.

Symptom	Checkpoints	Corrective Actions	Reference Page
Skewed-color printout. 	—	Run [**Calibration**].	page 10-55
	—	Run [**Color Registration**].	page 10-50
Colors appear different than you anticipated.	Did you choose appropriate image quality for the original?	Select appropriate image quality.	page 6-31
	Have you loaded color copy paper into the paper tray?	Load color copy paper into the paper tray.	—
	—	Run [**Calibration**].	page 10-55
	—	Run [**Tone Curve Adjustment**].	page 10-54
	—	**When making copies** Adjust the color balance.	page 6-34
	—	**When printing from a computer** Adjust the color using the printer driver.	—
Perform Tone Curve Adjustment in the System Menu. is displayed.	Over long periods of use, the effects of the ambient temperature and humidity can cause color output hues to vary slightly.	Run [**Tone Curve Adjustment**].	page 10-54
The color toner is empty.	Do you want to continue printing in black and white?	If the black toner is remained, the machine continues printing in black and white by selecting [**Print in Black and White**] of [**Color Toner Empty Action**].	page 8-18

Responding to Messages

If the touch panel or the computer displays any of these messages, follow the corresponding procedure.

NOTE

When contacting us, the serial number will be necessary. To check the serial number, refer to the following:

Display for Device Information (page 2-18)

A

Message	Checkpoints	Corrective Actions	Reference Page
Acceptable fold count exceeded.	Is the acceptable number of sheets exceeded?	Select [**Continue**] to print using Fold per acceptable number of sheets. Select [**Cancel**] to cancel the job.	—
Acceptable staple count exceeded.[*1]	Is the acceptable number of sheets exceeded?	Select [**Continue**] to print without using Staple. Select [**Cancel**] to cancel the job.	—
Access point was not detected.	—	Check if the access point has been set correctly.	—
Activation error.	—	Failed to activate the application. Contact administrator.	—
	—	Expansion Authentication is disabled. Turn the power switch off and on. If the error exists, contact administrator.	—
Add paper in cassette #.	Is the indicated cassette out of paper?	Load paper. Select the available paper. Select [**Continue**] to print.	page 3-2
	Are five or less envelopes loaded in the cassette?	Pull the cassette and loosen the paper length and width guides slightly.	—
Add paper in Multi Purpose tray.	Is the paper of the selected size loaded in the multi purpose tray?	Load paper. Select the available paper. Select [**Continue**] to print.	page 5-7
Adjusting Scanner.	—	The machine is under the adjustment to maintain its quality. Please wait.	—

*1 When Auto Error Clear is set to [**On**], processing resumes automatically after a set amount of time elapses. For details on Auto Error Clear, refer to the following:

Auto Error Clear (page 8-68)

B

Message	Checkpoints	Corrective Actions	Reference Page
Box is not found.	—	The specified box cannot be found. Job is canceled. Select [**End**].	—
Box limit exceeded.[*1]	Is [**End**] displayed on the screen?	The specified box is full, and no further storage is available. Job is canceled. Select [**End**]. Try to perform the job again after printing or deleting data from the box.	—
	—	Repeat Copy box is full, and no further repeat copy is available. Select [**Continue**] to print scanned pages. Select [**Cancel**] to cancel the job.	—

*1 When Auto Error Clear is set to [**On**], processing resumes automatically after a set amount of time elapses. For details on Auto Error Clear, refer to the following:
➡ Auto Error Clear (page 8-68)

C

Message	Checkpoints	Corrective Actions	Reference Page
Calibrating...	—	The machine is under the adjustment to maintain its quality. Please wait.	—
Cannot Banner Print.	—	System stamp is set up. Banner print cannot be carried out. Job is canceled. Select [**End**].	—
Cannot connect.	—	This appears when the Wi-Fi or Wi-Fi Direct connection did not complete. Check the settings, and check the signal conditions.	page 8-51 page 8-51
Cannot connect to Authentication Server.[*1]	—	Set machine time to match the server's time.	page 2-29
	—	Check the domain name.	page 9-2
	—	Check the host name.	page 9-2
	—	Check the connection status with the server.	—
Cannot connect to Server.	—	Check the connection status with the server.	—
Cannot duplex print on this paper.[*1]	Did you select a paper size/type that cannot be duplex printed?	If the selected paper is not changed and [**Continue**] is selected, duplex is released. Select the available paper. Select [**Continue**] to print.	page 6-52

Message	Checkpoints	Corrective Actions	Reference Page
Cannot find the destination computer. Check the computer.	Is the machine and the PC to which the scanned image is to be sent connected to the network?	Check the network and SMB settings. • The network cable is connected. • The hub is not operating properly. • The server is not operating properly. • Host name and IP address • Port number	page 2-6
	Is the account information (user ID, password) used to access the shared folder to which the scanned image is to be sent incorrect?	Check the following settings of the PC to which the scanned image is to be sent. • Host name • Path • Login user name **NOTE** If the sender is a domain user, specify the domain name. [Login User ID]@[Domain Name] Example: sa720XXXX@km • Login password • Folder share permissions of the recipient	—
Cannot fold this paper.	Did you select a paper size/type that cannot be folded?	If the selected paper is not changed and [**Continue**] is selected, fold is released. Select the available paper. Select [**Continue**] to print.	page 6-24
Cannot offset this paper.*1	Did you select a paper size/type that cannot be offset?	If the selected paper is not changed and [**Continue**] is selected, offset is released. Select the available paper. Select [**Continue**] to print.	page 6-25
Cannot perform remote printing.	—	Remote printing is prohibited. The job is canceled. Select [**End**].	page 8-31
Cannot print the specified number of copies.*1	—	Only one copy is available. Select [**Continue**] to continue printing. Select [**Cancel**] to cancel the job.	—
Cannot process this job.*1	—	Restricted by Authorization settings. The job is canceled. Select [**End**].	—
	—	Restricted by Job Accounting. The job is canceled. Select [**End**].	page 9-35

Message	Checkpoints	Corrective Actions	Reference Page
Cannot punch at the specified position.	Have you selected a position that cannot be punched?	If the selected paper is not changed and [**Continue**] is selected, punch is released. Select the available paper. Select [**Continue**] to print.	page 6-28
Cannot punch this paper.	Did you select a paper size/type that cannot be punched?	If the selected paper is not changed and [**Continue**] is selected, punch is released. Select the available paper. Select [**Continue**] to print.	page 6-28
Cannot staple at the specified position.	Have you selected a position that cannot be stapled?	If the selected paper is not changed and [**Continue**] is selected, staple is released. Select the available paper. Select [**Continue**] to print.	page 6-26
Cannot staple this paper.[*1]	Did you select a paper size/type that cannot be stapled?	If the selected paper is not changed and [**Continue**] is selected, staple is released. Select the available paper. Select [**Continue**] to print.	page 6-26
Cannot use ##### due to a failure.	—	Call service.	—
Checking the waste toner box. ####	Is the waste toner box full?	Replace the toner container. Reuse the black (K) toner container as a waste toner box. Handle the color toner containers according to the instructions supplied with them. Select [**Next**]. The instructions will be displayed. **NOTE** If you select [**Open Toner Container Cover**], you can open the Toner Container Cover that you closed accidentally.	—
Check the document processor.	Is the top cover of the document processor open?	Close the document processor cover.	—
	Is the document processor open?	Close the document processor.	—
Check the paper in the multi purpose tray.	—	The paper size is different. Set selected size paper and select [**Continue**].	page 5-7
Check the side feeder.	—	The side feeder is not installed correctly. Attach the side feeder.	—

Message	Checkpoints	Corrective Actions	Reference Page
Check the toner container.	—	Open the main unit front cover and remove the toner container. Shake carefully and replace. **NOTE** If you select [**Open Toner Container Cover**], you can open the Toner Container Cover that you closed accidentally.	—
Confidential document was detected.	—	The machine detects the document guard pattern. Job is canceled. Select [**End**].	

*1 When Auto Error Clear is set to [**On**], processing resumes automatically after a set amount of time elapses. For details on Auto Error Clear, refer to the following:
Auto Error Clear (page 8-68)

E

Message	Checkpoints	Corrective Actions	Reference Page
Empty the punch waste box.	Is the punch waste box full?	Follow the instructions on the screen. and empty the punch waste box.	page 10-17
Error occurred at cassette #.	—	Open the cassette. Check inside the machine and remove the paper.	—

F

Message	Checkpoints	Corrective Actions	Reference Page
Failed to specify Job Accounting.[*1]	—	Failed to specify Job Accounting when processing the job externally. The job is canceled. Select [**End**].	—
Failed to store job retention data.	—	The job is canceled. Select [**End**].	—
FAX box limit exceeded.	—	Follow the instructions on the screen and delete documents from the FAX box to make room for FAX reception. To check the canceled job, select the [**Status/Job Cancel**] key and then [**Printing Jobs**] to check receipt result.	**FAX Operation Guide**
Finisher tray is full of paper.	Is the acceptable storage capacity exceeded?	Remove the paper. Printing then resumes.	—

Message	Checkpoints	Corrective Actions	Reference Page
Folding tray is full of paper.	Is the acceptable storage capacity exceeded?	Remove the paper. Printing then resumes.	—

*1 When Auto Error Clear is set to [**On**], processing resumes automatically after a set amount of time elapses. For details on Auto Error Clear, refer to the following:
➡ Auto Error Clear (page 8-68)

H

Message	Checkpoints	Corrective Actions	Reference Page
Hard Disk error.	—	An error has occurred on the hard disk. Job is canceled. Select [**End**]. The possible error codes and their descriptions are as follows. 01: The amount of data that can be saved at once has been exceeded. Restart the system or turn the power OFF/ON. If the error still occurs, divide the file into smaller files. If the error occurs after the file is divided, the hard disk is damaged. Execute [**System Initialization**]. 04: Insufficient space on the hard disk to complete this operation. Move data or delete unneeded data.	—
Hard disk failure. Call service.	—	Call service.	—

I

Message	Checkpoints	Corrective Actions	Reference Page
Incorrect account ID.*1	—	The account ID was incorrect when processing the job externally. The job is canceled. Select [**End**].	—
Incorrect box password.	—	The box password was incorrect when processing the job externally. The job is canceled. Select [**End**].	—
Incorrect Login User Name or Password.*1	—	The login user name or password was incorrect when processing the job externally. The job is canceled. Select [**End**].	—

Message	Checkpoints	Corrective Actions	Reference Page
Install the punch waste box.	—	Follow the instructions on the screen. and install the punch waste box.	page 10-17
Install the waste toner box.	—	The waste toner box is not installed correctly. Set it correctly.	page 10-7

*1 When Auto Error Clear is set to [**On**], processing resumes automatically after a set amount of time elapses. For details on Auto Error Clear, refer to the following:
➡ Auto Error Clear (page 8-68)

J

Message	Checkpoints	Corrective Actions	Reference Page
Job Accounting restriction exceeded.*1	Is the acceptable printing count restricted by Job Accounting exceeded?	The printing count exceeded the acceptable count restricted by Job Accounting. Cannot print any more. The job is canceled. Select [**End**].	—
Job separator tray is full of paper.	Is the acceptable storage capacity exceeded?	Remove the paper and select [**Continue**]. Printing then resumes.	—

*1 When Auto Error Clear is set to [**On**], processing resumes automatically after a set amount of time elapses. For details on Auto Error Clear, refer to the following:
➡ Auto Error Clear (page 8-68)

K

Message	Checkpoints	Corrective Actions	Reference Page
KPDL error. *1	—	PostScript error has occurred. The job is canceled. Select [**End**].	—

*1 When Auto Error Clear is set to [**On**], processing resumes automatically after a set amount of time elapses. For details on Auto Error Clear, refer to the following:
➡ Auto Error Clear (page 8-68)

M

Message	Checkpoints	Corrective Actions	Reference Page
Machine failure.	—	Internal error has occurred. Make a note of the error code displayed on the screen. Call service.	—
Mailbox tray is full of paper.	Is the acceptable storage capacity exceeded?	Remove the paper. Printing then resumes.	—

Message	Checkpoints	Corrective Actions	Reference Page
Maximum number of scanned pages.	Is the acceptable scanning count exceeded?	Cannot scan pages any more. Follow the instructions on the screen.	—
Memory is full.*1	—	The memory is full and the job cannot be continued. Select [**Continue**] to print the scanned pages. The print job cannot be processed completely. Select [**Cancel**] to cancel the job. When insufficient memory occurred frequently, contact your dealer or service representative.	—
	—	The process cannot be performed due to insufficient memory. If only [**End**] is available, select [**End**]. The job will be canceled.	—

*1 When Auto Error Clear is set to [**On**], processing resumes automatically after a set amount of time elapses. For details on Auto Error Clear, refer to the following:
➡ Auto Error Clear (page 8-68)

N

Message	Checkpoints	Corrective Actions	Reference Page
Non-genuine toner installed.	Is the installed toner container our own brand?	We will not be liable for any damage caused by the use of third party supplies in this machine.	—

P

Message	Checkpoints	Corrective Actions	Reference Page
Paper jam.	—	If a paper jam occurs, the machine will stop and the location of the jam will be indicated on the screen. Leave the machine on and follow the instructions to remove the jammed paper.	page 10-57
Paper left.	—	Remove paper from the document finisher.	—
	—	Remove paper from the finisher process tray.	—
	—	Remove paper from the finisher tray.	—

Message	Checkpoints	Corrective Actions	Reference Page
Performing Drum Refresh...	—	The machine is under the adjustment to maintain its quality. Please wait.	—
Perform Tone Curve Adjustment in the System Menu.	Over long periods of use, the effects of the ambient temperature and humidity can cause output hues to vary slightly.	Run [**Tone Curve Adjustment**].	page 10-54
Preparing to print.	—	The machine is under the adjustment to maintain its quality. Please wait.	—
Printing System error.	—	An error has occurred on Printing System. Refer to Responding to Printing System Error for the error code and corrective actions.	page 10-48
Printing System error. Press Status/Job Cancel key to check error.	Select [**Status/Job Cancel**] key. Is the [**Printing System Error.**] message displayed?	An error has occurred on Printing System. Refer to Responding to Printing System Error for the error code and corrective actions.	page 10-48
	Select [**Status/Job Cancel**] key. Is the [**Device/Communication**] screen displayed?	An error has occurred on Printing System. Select [**Printing Sys Err**] of the [**Device/Communication**] screen and check error.	page 10-48

R

Message	Checkpoints	Corrective Actions	Reference Page
Removable memory error.[*1]	Is writing to a removable memory prohibited?	An error occurred in the removable memory. The job stopped. Select [**End**]. The possible error codes and their descriptions are as follows. 01: Connect a removable memory that can be written to.	—
	—	An error occurred in the removable memory. The job stopped. Select [**End**]. The possible error codes and their descriptions are as follows. 01: The amount of data that can be saved at once has been exceeded. Restart the system or turn the power OFF/ON. If the error still occurs, the removable memory is not compatible with the machine. Use the removable memory formatted by this machine. If the removable memory cannot be formatted, it is damaged. Connect a compatible removable memory.	page 5-67
Removable Memory is full.[*1]	—	The job is canceled. Select [**End**]. Insufficient free space in the removable memory. Delete unneeded files.	—
Remove originals in the document processor.	Are there any originals left in the document processor?	Remove originals from the document processor.	—
Replace all originals and press [Continue].	—	Remove originals from the document processor, put them back in their original order, and place them again. Select [**Continue**] to resume printing. Select [**Cancel**] to cancel the job.	—
Replace the waste toner box.	Is the waste toner box full?	Replace the waste toner box.	page 10-7
Running security function...	—	Running security function. Please wait.	—

*1 When Auto Error Clear is set to [**On**], processing resumes automatically after a set amount of time elapses. For details on Auto Error Clear, refer to the following:
➡ Auto Error Clear (page 8-68)

S

Message	Checkpoints	Corrective Actions	Reference Page
Scanner memory is full.[*1]	—	Scanning cannot be performed due to insufficient memory of the scanner. Follow the instructions on the screen.	—
Scheduled sending jobs exceeded.	—	The number of jobs has exceeded the limit set for delayed transmission. Select [**End**]. The job is canceled. Wait until the delayed transmission is executed, or cancel the delayed transmission and then perform the job again.	—
Send Error.[*1]	—	An error has occurred during transmission. The job is canceled. Select [**End**]. Refer to Responding to Send Error for the error code and corrective actions.	page 10-45
Staple is empty. [*1]	Has the staple cartridge holder run out of staples?	If the staples are depleted, the machine will stop and the location of staple depletion will be indicated on the screen. Leave the machine on and follow the instructions to replace the staple case. Select [**Continue**] to print without stapling. Select [**Cancel**] to cancel the job.	page 10-10 page 10-12 page 10-13 page 10-15
Staple is empty. (Manual Staple)	Has staple cartridge holder A run out of staples?	Add staples to staple cartridge holder A.	page 10-13
Staple jam.	—	If a staple jam occurs, the machine will stop and the location of the jam will be indicated on the screen. Leave the machine on and follow the instructions to remove the jammed staple.	page 10-108
System error.	—	System error has occurred. Follow the instructions on the screen.	—

*1 When Auto Error Clear is set to [**On**], processing resumes automatically after a set amount of time elapses. For details on Auto Error Clear, refer to the following:
➡ Auto Error Clear (page 8-68)

T

Message	Checkpoints	Corrective Actions	Reference Page
Regulating the temperature...	—	The machine is under the adjustment to maintain its quality. Please wait.	—
The cover is open.	Is there any cover which is open?	Close the cover indicated on the screen.	—
The device cannot be connected because allowed connections would be exceeded.	—	Cancel a connection to a portable device that is not being used, or set the machine's auto disconnect time to break portable device connections.	page 8-51
The folding unit is open.	—	Close the folding unit.	—
The password does not meet password policy.	Is the password expired?	Change the login password. The job is canceled. Select [**End**].	page 9-7 page 9-8
	Is the password policy requirement (such as password length or required characters) changed?	Confirm the password policy requirements and change the login password. The job is canceled. Select [**End**].	page 9-7 page 9-8
The phone receiver is off the hook.	—	Put down the receiver.	—
The removable memory is not formatted.	Is the removable memory formatted by this machine?	Perform [**Format**] on this machine.	—
The slit glass requires cleaning.	—	Clean the slit glass using the cleaning cloth supplied with the document processor.	page 10-3
The toner container is improperly installed.	—	The toner container is improperly installed or not installed. Open the front cover and set all the four toner containers correctly.	—
This user account is locked out.	—	Contact administrator. The job is canceled. Select [**End**].	—
Time for maintenance soon. #####	—	Call service.	—

Message	Checkpoints	Corrective Actions	Reference Page
Toner [C][M][Y][K] are empty.	—	Replace the toner container to our specified toner container. **NOTE** If the color toner is empty but the black toner is remained, the machine continues printing in black and white by selecting [**Print in Black and White**] of Color Toner Empty Action.	page 10-4
Toner is low. [C][M][Y][K](Replace when empty.)	—	It is almost time to replace the toner container. Obtain a new toner container.	—
Tray # is full of paper.	Is the acceptable storage capacity exceeded?	Remove the paper. Printing then resumes.	—

U

Message	Checkpoints	Corrective Actions	Reference Page
Unknown Toner Installed. PC [C][M][Y][K]	Does the installed toner container's regional specification match the machine's?	Install the specified container.	—

W

Message	Checkpoints	Corrective Actions	Reference Page
Warning for high temperature. Adjust the room temperature.	—	Print quality may be deteriorated. Adjust the temperature and the humidity of your room.	—
Warning for low temperature. Adjust the room temperature.	—	Print quality may be deteriorated. Adjust the temperature and the humidity of your room.	—
Warning low memory.	—	Cannot start the job. Try again later.	—
Waste toner box almost full.	—	It is almost time to replace the waste toner box. Obtain a new waste toner box.	—

Y

Message	Checkpoints	Corrective Actions	Reference Page
You cannot use this box.	—	You cannot use the specified box. Job is canceled. Select [**End**].	—

Responding to Send Error

Error Code	Message	Corrective Actions	Reference Page
1101	Failed to send the e-mail. Failed to send i-FAX.	Check the host name of the SMTP server on the Command Center RX.	page 2-65
	Failed to send via FTP.	Check the host name of FTP.	page 5-29
	Failed to send via SMB.	Check the host name of SMB.	page 5-26
1102	Failed to send via SMB.	Check the SMB settings. • Login user name and login password **NOTE** If the sender is a domain user, specify the domain name. • Host name • Path	page 5-26
	Failed to send the e-mail.	Check the following on the Command Center RX. • SMTP login user name and login password • POP3 login user name and login password • E-mail size limit	page 2-65
	Failed to send i-FAX.	Check the following on the Command Center RX. • SMTP login user name and login password • POP3 login user name and login password	Refer to **FAX Operation Guide**
	Failed to send via FTP.	Check the FTP settings. • Login user name and login password **NOTE** If the sender is a domain user, specify the domain name. • Path • Folder share permissions of the recipient	page 5-29
1103	Failed to send via SMB.	Check the SMB settings. • Login user name and login password **NOTE** If the sender is a domain user, specify the domain name. • Path • Folder share permissions of the recipient	page 5-26
	Failed to send via FTP.	Check the FTP settings. • Path • Folder share permissions of the recipient	page 5-29

Error Code	Message	Corrective Actions	Reference Page
1104	Failed to send the e-mail.	Check the e-mail address. **NOTE** If the address is rejected by the domain, you cannot send the email.	page 5-25
	Failed to send i-FAX.	Check the i-FAX address. **NOTE** If the address is rejected by the domain, you cannot send the email.	Refer to **FAX Operation Guide**
1105	Failed to send via SMB.	Check the following settings. [**System Menu/Counter**] key > [**System/ Network**] > [**Network**] > [**TCP/IP Settings**] > [**Protocol Detail**] > [**SMB Client (Transmission)**]	page 8-49
	Failed to send the e-mail.	Select [**On**] of the SMTP settings on the Command Center RX.	page 2-65
	Failed to send via FTP.	Check the following settings. [**System Menu/Counter**] key > [**System/ Network**] > [**Network**] > [**TCP/IP Settings**] > [**Protocol Detail**] > [**FTP Client (Transmission)**]	page 8-49
	Failed to send i-FAX.	Select [**On**] of the i-FAX settings on the Command Center RX.	page 2-65
1106	Failed to send the e-mail. Failed to send i-FAX.	Check the sender address of SMTP on the Command Center RX.	page 2-65
1131	Failed to send via FTP.	Enable the SSL. [**System Menu/Counter**] key > [**System/ Network**] > [**Network**] > [**Secure Protocol**] > [**SSL**]	page 8-59
1132	Failed to send the e-mail.	Check the following of the SMTP server. • Is SMTP over SSL available? • Is the encryption available?	Refer to the **Command Center RX User Guide**.
	Failed to send via FTP.	Check the following of the FTP server. • Is FTPS available? • Is the encryption available?	—

Error Code	Message	Corrective Actions	Reference Page
2101	Failed to send via SMB.	Check the network and SMB settings. • The network cable is connected. • The hub is not operating properly. • The server is not operating properly. • Host name and IP address • Port number	—
	Failed to send via FTP.	Check the network and FTP settings. • The network cable is connected. • The hub is not operating properly. • The server is not operating properly. • Host name and IP address • Port number	—
	Failed to send the e-mail. Failed to send i-FAX.	Check the network and Command Center RX. • The network cable is connected. • The hub is not operating properly. • The server is not operating properly. • POP3 server name of the POP3 user • SMTP server name	page 2-65
2102 **2103**	Failed to send via FTP.	Check the network. • The network cable is connected. • The hub is not operating properly. • The server is not operating properly.	—
		Check the following of the FTP server. • Is FTP available? • The server is not operating properly.	—
	Failed to send the e-mail. Failed to send i-FAX.	Check the network. • The network cable is connected. • The hub is not operating properly. • The server is not operating properly.	—
2201 **2202** **2203** **2231**	Failed to send the e-mail. Failed to send via FTP. Failed to send via SMB. Failed to send i-FAX.	Check the network. • The network cable is connected. • The hub is not operating properly. • The server is not operating properly.	—
2204	Failed to send the e-mail. Failed to send i-FAX.	Check the e-mail size limit of the SMTP settings on the Command Center RX.	page 2-65
3101	Failed to send the e-mail.	Check the authentication methods of both the sender and the recipient.	—
	Failed to send via FTP.	Check the network. • The network cable is connected. • The hub is not operating properly. • The server is not operating properly.	—

Error Code	Message	Corrective Actions	Reference Page
3201	Failed to send the e-mail. Failed to send i-FAX.	Check the SMTP user authentication method of the recipient.	—
0007 **4201** **4701** **5101** **5102** **5103** **5104** **7101** **7102** **7103** **720f**	—	Turn the power switch off and back on. If this error occurs several times, make a note of the displayed error code and contact your service representative.	page 2-9
9181	—	The scanned original exceeds the acceptable number of pages of 999. Send the excess pages separately.	—

Responding to Printing System Error

Error Code	Message	Checkpoints	Corrective Actions
1020	Machine interface board failure. Call service.	—	Printing System failure has occurred. Make a note of the error code displayed on the touch panel. Call service.
1030	Failed to connect to the Printing System. Check the connection to the Printing System. > Printing System power > Interface cable connection	Is the power switch of Printing System turned ON?	Turn the power switch of Printing System on.
		Is the power cable of Printing System plugged?	Turn the power switch of the machine off and check that the power cable of Printing System is correctly plugged. After checking the power cable, turn the power switch of the machine on.
		Is the interface cable (DVI) connected from the machine to Printing System?	Check that the interface cable is correctly connected.
1031	Failed to connect to the Printing System. Check the connection to the Printing System. > Interface cable connection	—	Check that the interface cable is correctly connected. If the error exists, Printing System failure has occurred. Make a note of the error code displayed on the touch panel. Call service.

Error Code	Message	Checkpoints	Corrective Actions
1040	Failed to connect to the Printing System. Check the connection to the Printing System. > Network cable connection > Network settings	Is the network cable connected from the machine to Printing System?	Check the network. • The network cable is connected. • The hub is not operating properly. • The server is not operating properly.
		Are the network settings correct?	Select [**System Menu/ Counter**], [**System/Network**], [**Network**], [**Wired Network Settings**] and then [**Next**] of "TCP/IP Setting" and configure the following settings: • TCP/IP: On • IPv6: On
2000	Failed to connect to the Printing System. Check the connection to the Printing System. > Both machine and Printing System > Firmware versions installed on the machine and Printing System	—	Make a note of the error code displayed on the touch panel. Call service.
2010 **2020**	Failed to connect to the Printing System. Check the connection to the Printing System. > Both machine and machine interface board > Firmware versions installed on the machine and Printing System	—	Make a note of the error code displayed on the touch panel. Call service.
3000	Failed to connect to the Printing System. Check the connection to the Printing System. > Network settings > Both machine and Printing System	—	Turn the power switch off and on. If the error exists, Printing System failure has occurred. Make a note of the error code displayed on the touch panel. Call service.

Adjustment/Maintenance

Overview of Adjustment/Maintenance

If there is an image problem and the message to run adjustment or maintenance menu appears, run Adjustment/Maintenance in the system menu.

The table below lists the item you can carry out.

Item	Description	Reference Page
Color Registration Procedure	Correct the color position to resolve color drift.	page 10-50
Tone Curve Adjustment	When the printed output tone may differ from the original, perform this function to ensure consistency with the original tone.	page 10-54
Drum Refresh	Remove image blur and white dots from the printout.	page 10-55
Calibration	Calibrate the device to ensure correct toner overlapping and consistency with the original tone.	page 10-55
Laser Scanner Cleaning	Remove vertical white lines from the printout.	page 10-56
Developer Refresh	Adjust the printed image that is too light or incomplete, even though there is enough toner.	page 10-56

Color Registration Procedure

When first installing the machine or moving it to a new location, color drift during printing may occur. Use this function to correct the color position of each of cyan, magenta and yellow to resolve color drift.

Auto registration and manual registration are available for Color Registration. Color drift can be largely corrected through auto registration. However, if it is not resolved or to perform more detailed settings, use the manual registration.

IMPORTANT

Before performing color registration, be sure to perform Calibration. If color drift remains, perform color registration. By performing color registration without performing Calibration, the color drift will be resolved once, however, it may cause the serious color drift later.

Calibration on page 10-55

Auto Correction

1 Load paper.

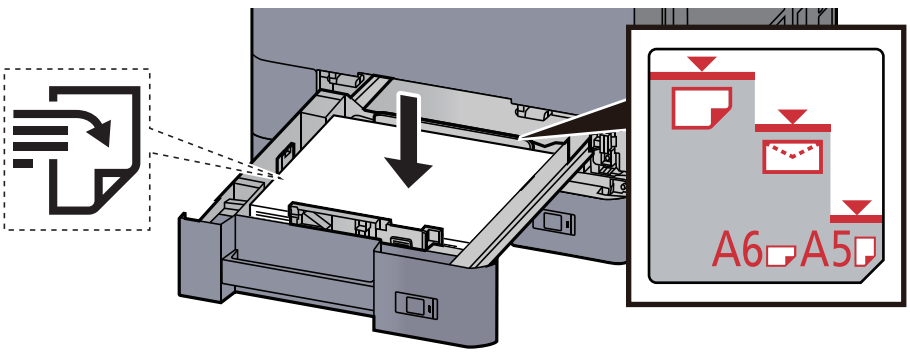

IMPORTANT

- **Load the paper with the print side facing up.**
- **After removing new paper from its packaging, fan the paper before loading it in the cassette.**

  Loading in Cassette 1 (page 3-4)
- **Before loading the paper, be sure that it is not curled or folded. Paper that is curled or folded may cause paper jams.**
- **Ensure that the loaded paper does not exceed the level indicator (see illustration above).**
- **If paper is loaded without adjusting the paper length guide and paper width guide, the paper may skew or become jammed.**

2 Display the screen.

[**System Menu/Counter**] key > [**Adjustment/Maintenance**] > "Color Registration" [**Next**] > "Auto" [**Next**]

3 Print the chart.

Select [**Start**].

A chart is printed.

Chart Example

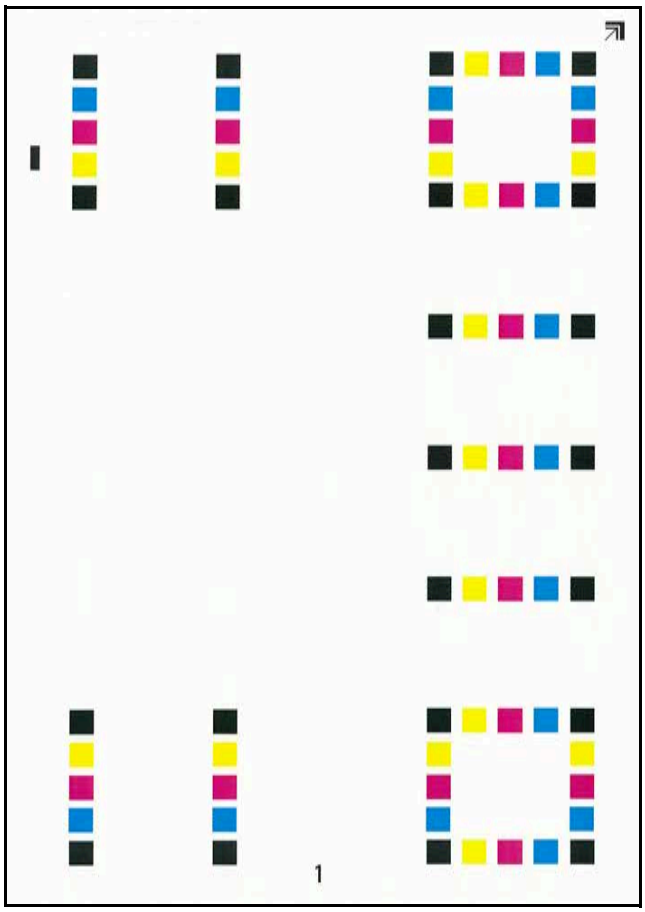

4 Perform the color registration.

1 As shown in the illustration, place the printed side down on the platen with the edge with the arrows toward the back.

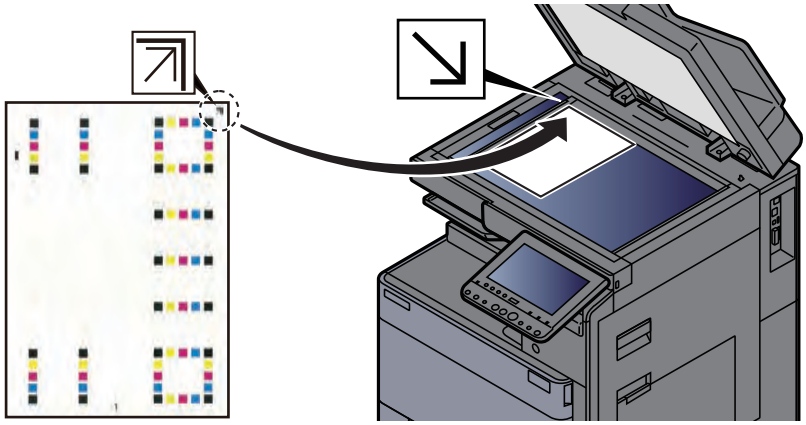

2 Select [**Start**] to scan the chart.

When scanning is finished, color printing position correction starts.

3 When color printing position correction ends, select [**OK**].

Manual Correction

1 Load paper.

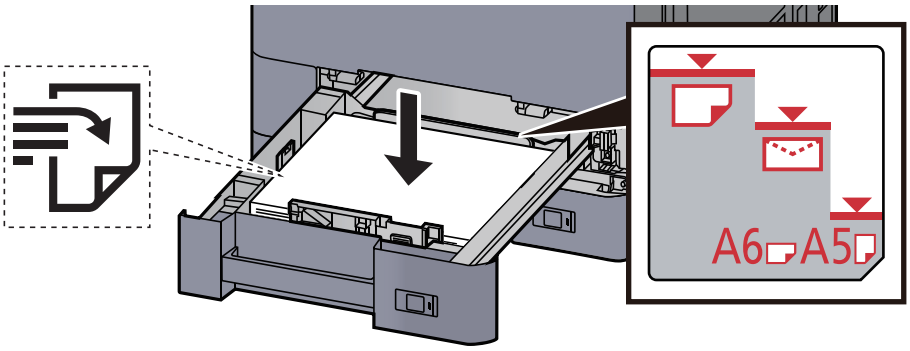

IMPORTANT

- **Load the paper with the print side facing up.**
- **After removing new paper from its packaging, fan the paper before loading it in the cassette.**

Loading in Cassette 1 (page 3-4)

- **Before loading the paper, be sure that it is not curled or folded. Paper that is curled or folded may cause paper jams.**
- **Ensure that the loaded paper does not exceed the level indicator (see illustration above).**
- **If paper is loaded without adjusting the paper length guide and paper width guide, the paper may skew or become jammed.**

2 Display the screen.

[**System Menu/Counter**] key > [**Adjustment/Maintenance**] > "Color Registration" [**Next**] > "Manual" [**Next**]

3 Print the chart.

Select [**Print Chart**].

A chart is printed. On the chart, for each of M (magenta), C (cyan) and Y (yellow), charts for H-1 to 7 and V-1 to 5 are printed.

Chart Example

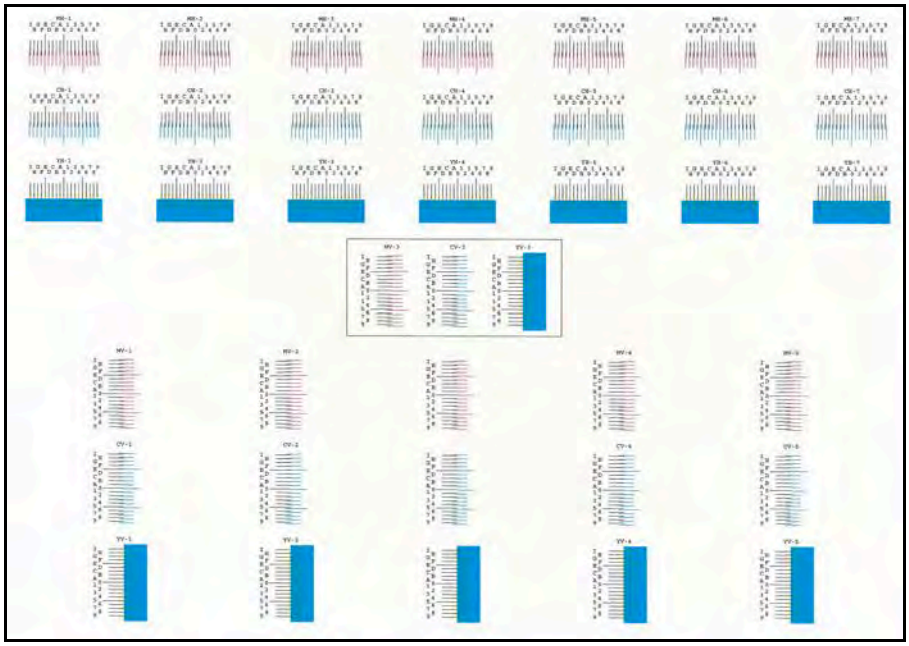

4 Enter the appropriate value.

1 Find the location on each chart where 2 lines most closely match. If this is the 0 position, registration for that color is not required. For the illustration, B is the appropriate value.

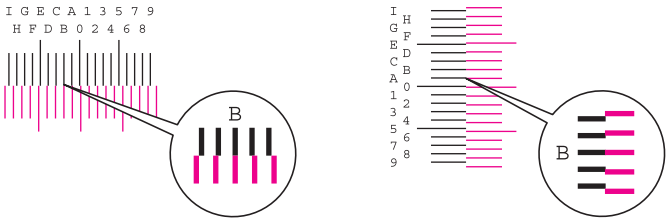

From charts V-1 to V-5, read only the values from V-3 (center).

2 Select "Color Registration" [**Next**].

3 Select [**Change**] for the chart to be corrected.

4 Select [+] or [-] to enter the values read from the chart.

Select [+] to increase the value from 0 to 9. To decrease, select [-].

By selecting [-], the value changes from 0 to alphabetic letters, going from A to I. To move in the reverse direction, select [+].

5 Repeat steps 3 and 4 to enter the registration values for each chart.

6 Select [**Start**] after all values have been entered. Color registration begins.

7 Select [**OK**] after color registration is complete.

Tone Curve Adjustment

After prolonged use, or from the effects of surrounding temperature or humidity, the printed output tone may differ from the original. Perform this function to ensure consistency with the original tone. Before executing Tone Curve Adjustment, execute calibration. If calibration does not improve the tones, perform Tone Curve Adjustment.

Calibration (page 10-55)

A total of 2 pattern pages (No. 1 and 2) are printed during adjustment. The printed patterns are read sequentially during the adjustment.

1 Load paper.

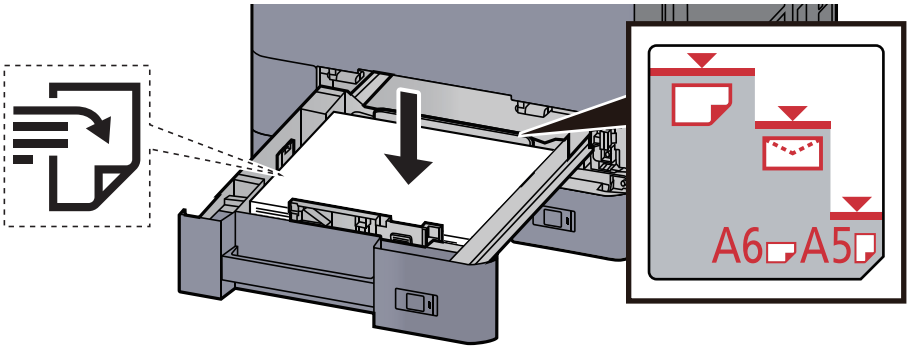

IMPORTANT

- **Load the paper with the print side facing up.**
- **After removing new paper from its packaging, fan the paper before loading it in the cassette.**

  Loading in Cassette 1 (page 3-4)
- **Before loading the paper, be sure that it is not curled or folded. Paper that is curled or folded may cause paper jams.**
- **Ensure that the loaded paper does not exceed the level indicator (see illustration above).**
- **If paper is loaded without adjusting the paper length guide and paper width guide, the paper may skew or become jammed.**

2 Display the screen.

[**System Menu/Counter**] key > [**Adjustment/Maintenance**] > "Tone Curve Adjustment" [**Next**]

3 Adjust the tone curve.

1 Select [**Start**]. A pattern is printed.

Check that the number "1" is printed at the bottom of the pattern.

2 As shown in the illustration, place the printed side down on the platen with the edge with the arrows toward the back.

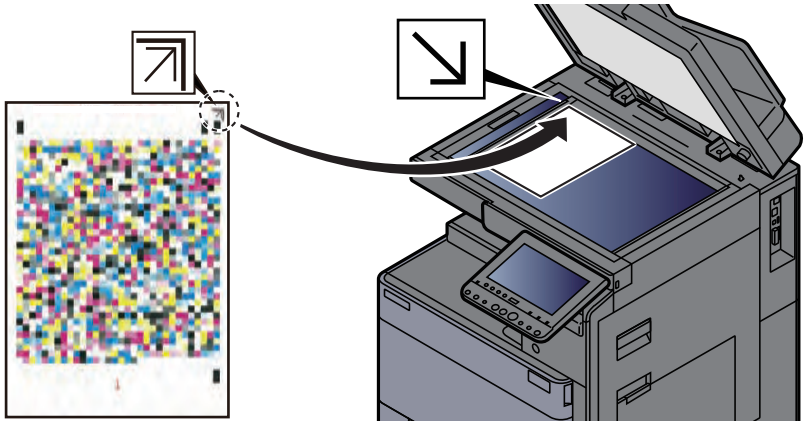

3 Select [**Start**]. The pattern is read and adjustment begins.

The second pattern is output.

4 Check that the number "2" is printed at the bottom of the pattern and repeat steps 2 to 3 to read pattern 2.

5 Select [**OK**] in the adjustment end confirmation screen.

Drum Refresh

Remove image blur and white dots from the printout.

NOTE

Drum Refresh cannot be performed while printing. Execute Drum Refresh after the printing is done.

1 Display the screen.

[**System Menu/Counter**] key > [**Adjustment/Maintenance**] > "Drum Refresh" [**Next**]

2 Perform the drum refresh.

Select [**Start**]. "Drum Refresh" begins.

Calibration

Calibrate the device to ensure correct toner overlapping and consistency with the original tone.

1 Display the screen.

[**System Menu/Counter**] key > [**Adjustment/Maintenance**] > "Calibration" [**Next**]

2 Perform the calibration.

Select [**Start**]. "Calibration" begins.

NOTE

When correct toner overlapping is not ensured even after performing calibration, refer to the following:

Color Registration Procedure (page 10-50)

When consistency with the original tone is not ensured even after performing calibration, refer to the following:

Tone Curve Adjustment (page 10-54)

Laser Scanner Cleaning

Remove vertical white lines from the printout.

1 Display the screen.

[**System Menu/Counter**] key > [**Adjustment/Maintenance**] > "Laser Scanner Cleaning" [**Next**]

2 Perform the laser scanner cleaning.

Select [**Start**]. "Laser Scanner Cleaning" begins.

Developer Refresh

Adjust the printed image that is too light or incomplete, even though there is enough toner.

1 Display the screen.

[**System Menu/Counter**] key > [**Adjustment/Maintenance**] > "Developer Refresh" [**Next**]

2 Perform the Developer Refresh.

Select [**Start**]. "Developer Refresh" begins.

NOTE

Waiting time may be longer when the toner is refilled during developer refresh.

Clearing Paper Jams

If a paper jam occurs, printing stops and the location at which the paper jam has occurred and the following message appear on the touch panel.

"Paper Jam."

Refer to these procedures to remove the jammed paper.

Jam Location Indicators

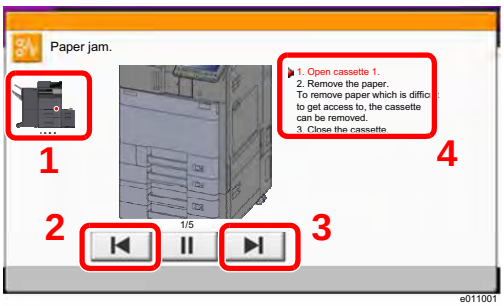

1 Shows the location of a paper jam.

2 Shows the previous step.

3 Shows the next step.

4 Shows the removal procedure.

If a paper jam occurs, the location of the jam will be displayed on the touch panel as well as the clearing instructions.

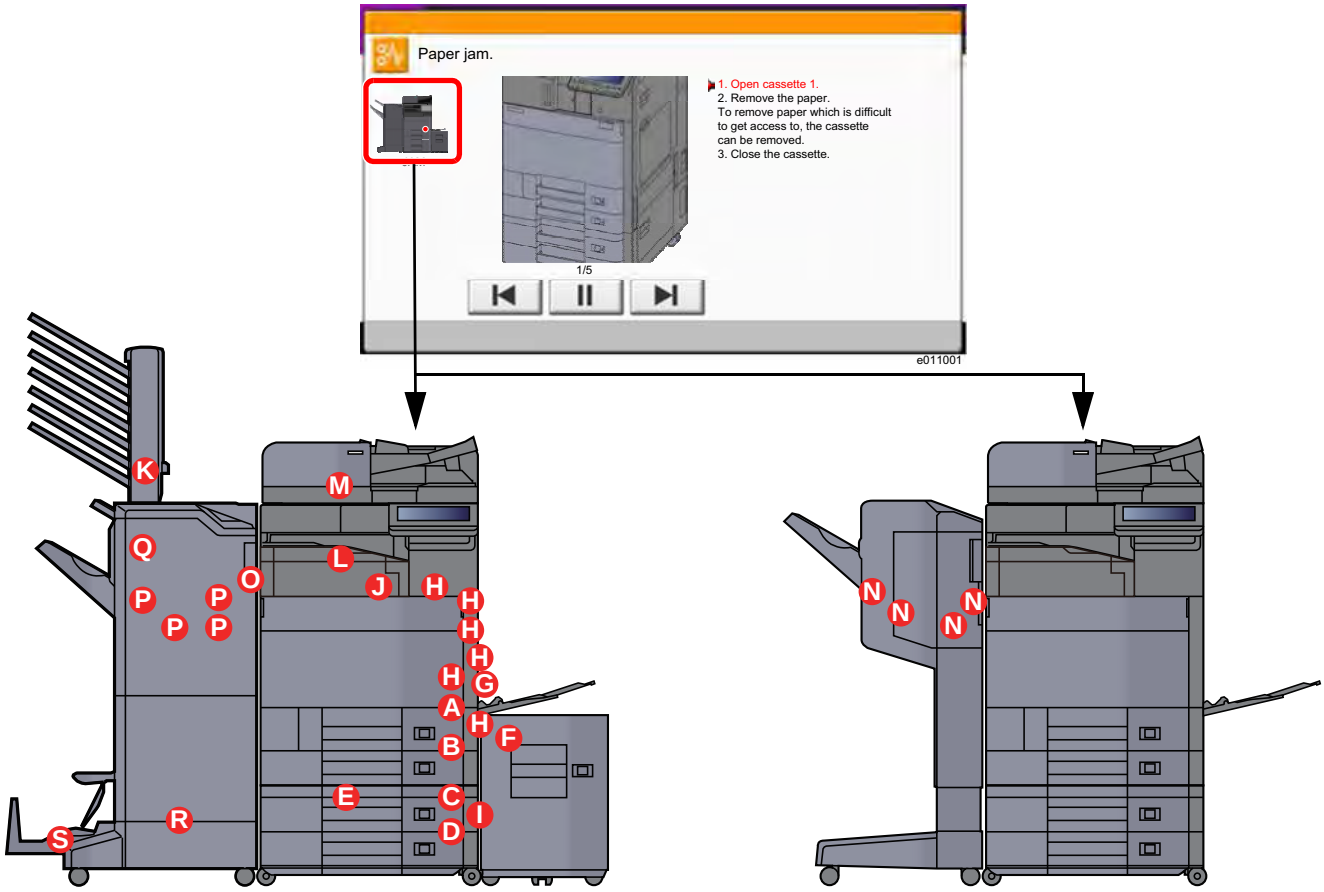

Paper Jam Location Indicator	Paper Jam Location	Reference Page
A	Cassette 1	page 10-58
B	Cassette 2	page 10-61
C	Cassette 3 (500-sheet×2)	page 10-64
	Cassette 3 (1,500-sheet×1)	page 10-66

Paper Jam Location Indicator	Paper Jam Location	Reference Page
D	Cassette 4 (500-sheet×2)	page 10-64
E	Cassette 4 (1,500-sheet×2)	page 10-68
F	Cassette 5 (Side Feeder)	page 10-71
G	Multi Purpose Tray	page 10-73
H	Right Cover 1	page 10-74
I	Right Cover 2	page 10-78
J	Bridge Unit	page 10-81
K	Mailbox	page 10-82
L	Inner Finisher	page 10-83
M	Document Processor	page 10-84 page 10-86
N	1,000-Sheet Finisher	page 10-87
O	4,000-Sheet Finisher (Inner)	page 10-90
P	4,000-Sheet Finisher (Tray A)	page 10-91
Q	4,000-Sheet Finisher (Tray B)	page 10-95
R	Folding Unit	page 10-98
S	Folding Tray	page 10-103

After you remove the jam, the machine will warm up again and the error message will be cleared. The machine resumes with the page that was printing when the jam occurred.

Remove any jammed paper in Cassette 1

CAUTION

- **Do not reuse jammed papers.**
- **If the paper tears during removal, be sure to remove any loose scraps of paper from inside the machine. Scraps of paper left in the machine could cause subsequent jamming.**

1 If the optional side feeder is installed, detach the side feeder.

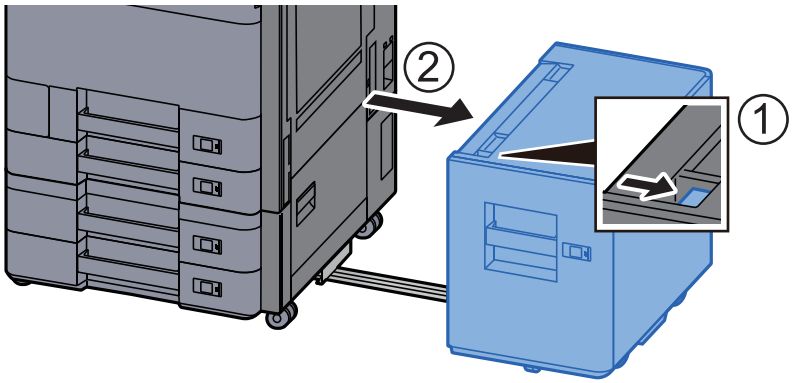

2 **Open Right Cover 1.**

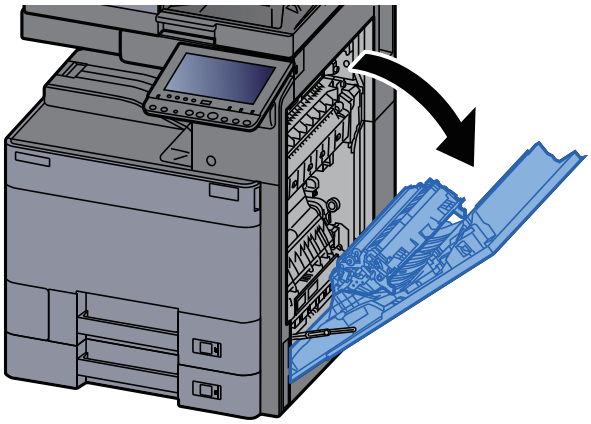

3 **Open the cover (A3).**

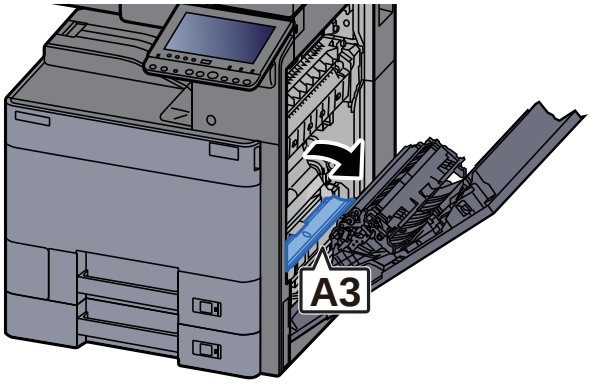

4 **Remove any jammed paper.**

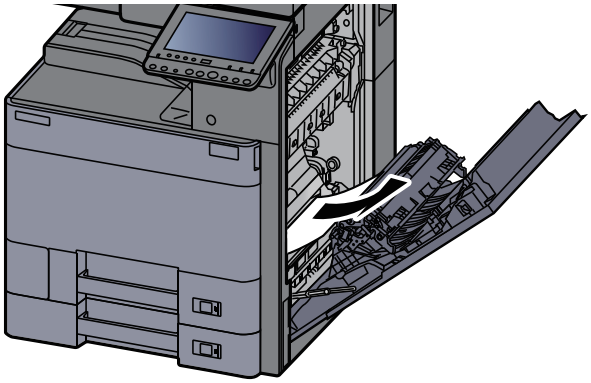

5 **Return the cover to the original position.**

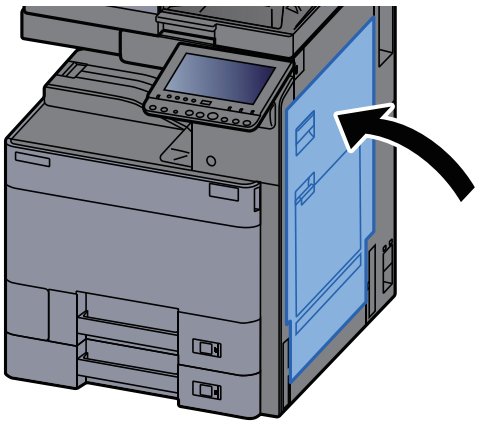

6 Pull Cassette 1 out toward you until it stops.

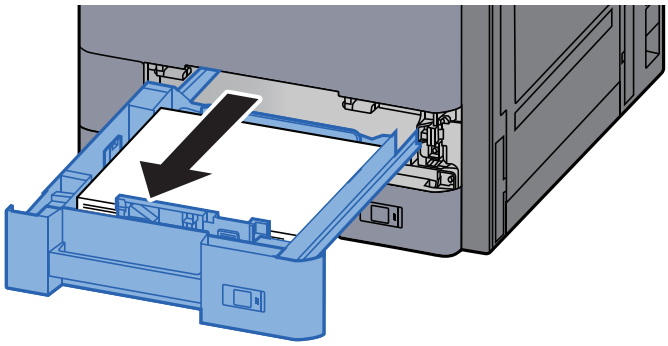

7 Remove any jammed paper.

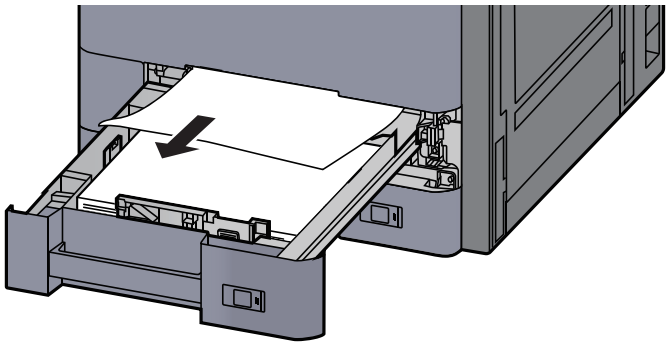

NOTE

To remove paper which is difficult to get access to, the cassette can be removed.

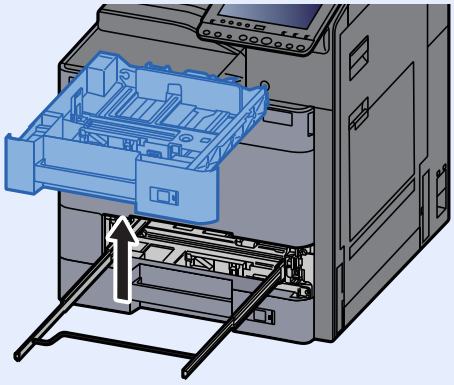

8 Push Cassette 1 back in.

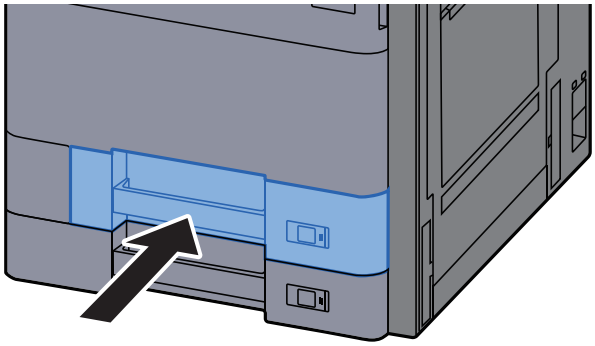

9 **If the optional side feeder is installed, return the side feeder to the original position.**

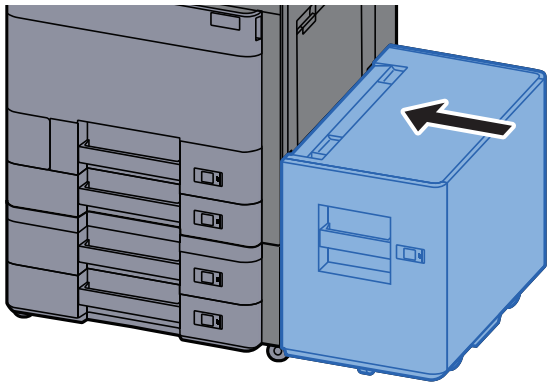

Remove any jammed paper in Cassette 2

CAUTION

- **Do not reuse jammed papers.**
- **If the paper tears during removal, be sure to remove any loose scraps of paper from inside the machine. Scraps of paper left in the machine could cause subsequent jamming.**

1 **If the optional side feeder is installed, detach the side feeder.**

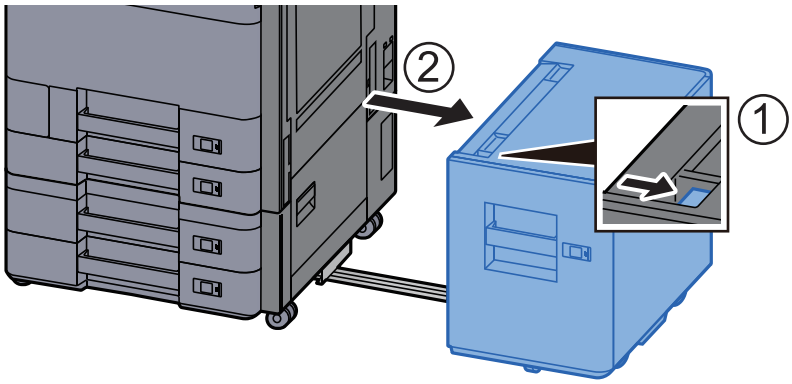

2 **Open Right Cover 1.**

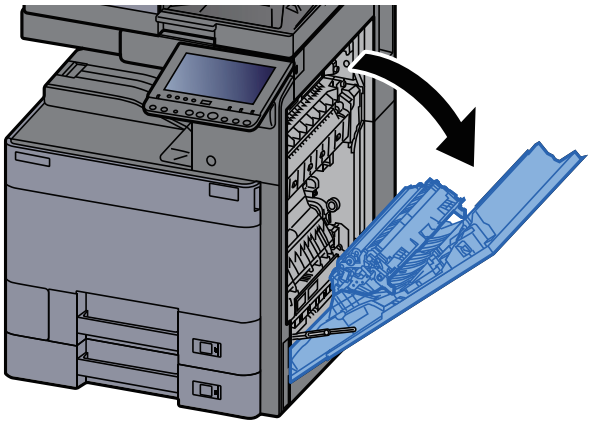

3 **Close the duplex unit (A5).**

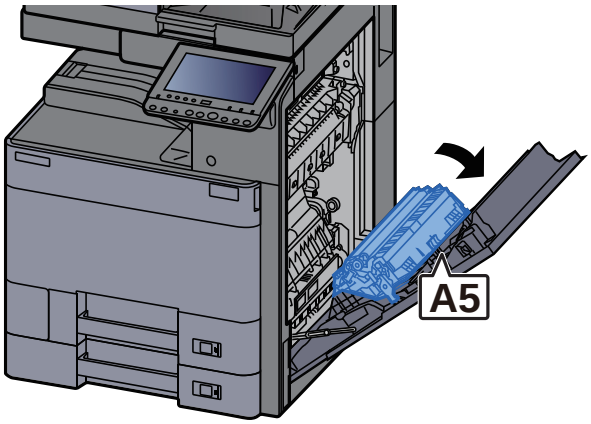

4 **Remove any jammed paper.**

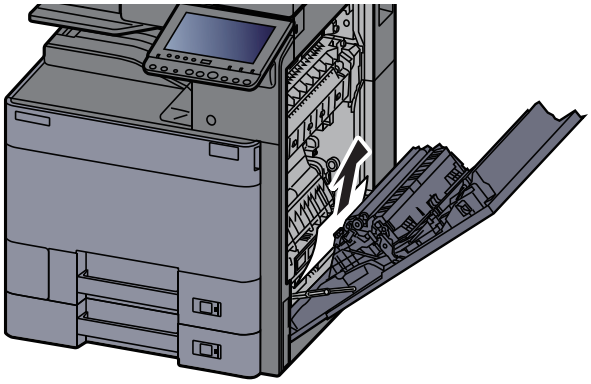

5 **Return the cover to the original position.**

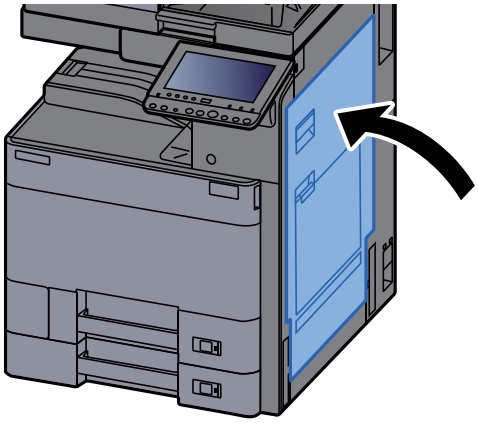

6 **Pull Cassette 2 out toward you until it stops.**

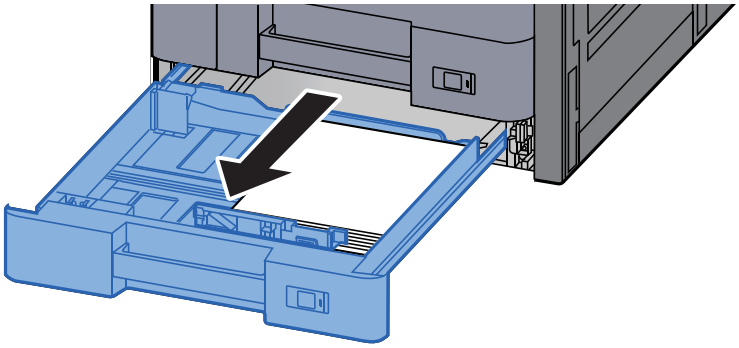

7 Remove any jammed paper.

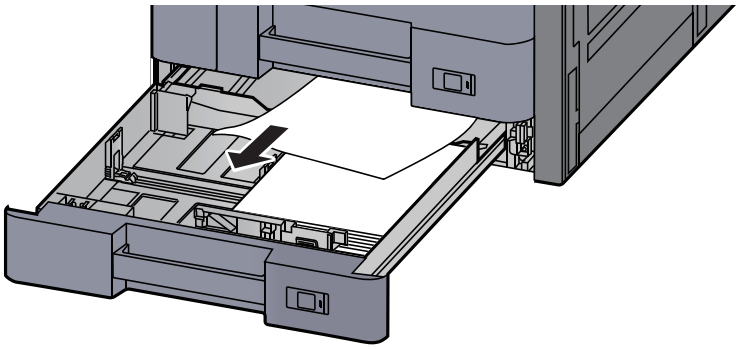

NOTE

To remove paper which is difficult to get access to, the cassette can be removed.

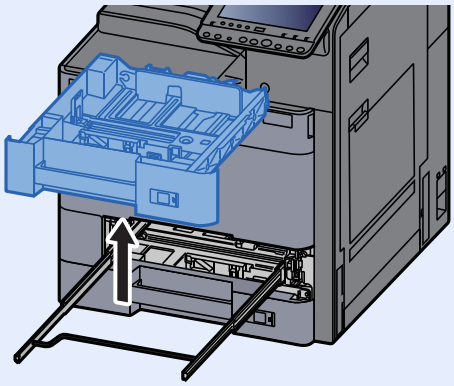

8 Push Cassette 2 back in.

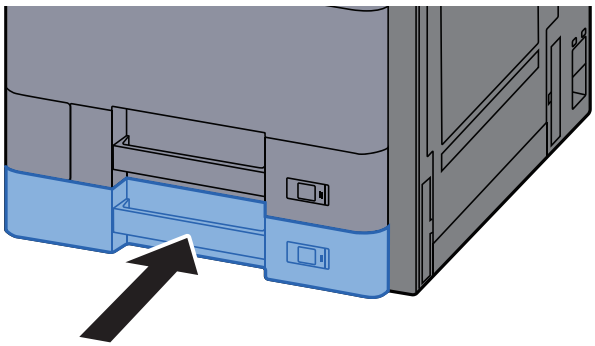

9 If the optional side feeder is installed, return the side feeder to the original position.

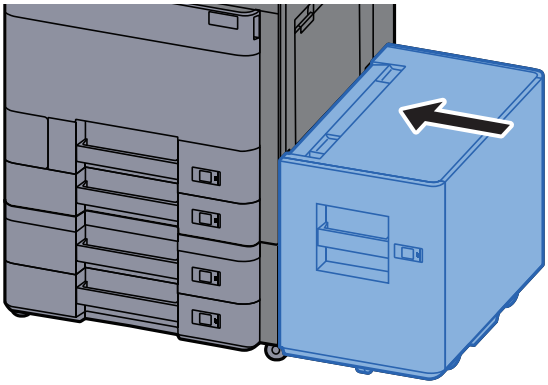

Remove any jammed paper in Cassette 3 and 4 (500-sheet×2)

See the explanation for Cassette 3 below.

CAUTION

- **Do not reuse jammed papers.**
- **If the paper tears during removal, be sure to remove any loose scraps of paper from inside the machine. Scraps of paper left in the machine could cause subsequent jamming.**

1 If the optional side feeder is installed, detach the side feeder.

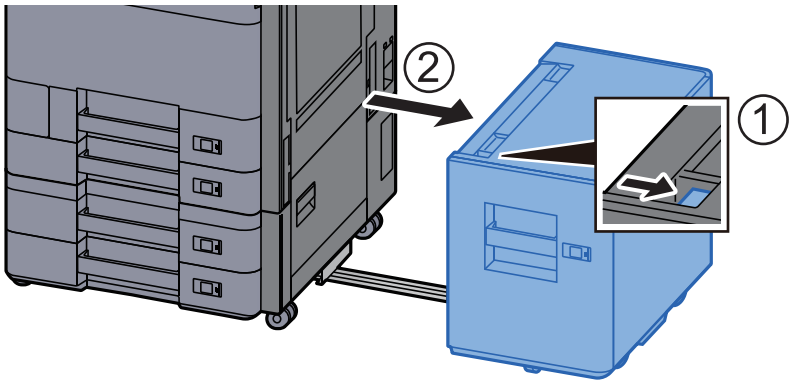

2 Open Right Cover 2.

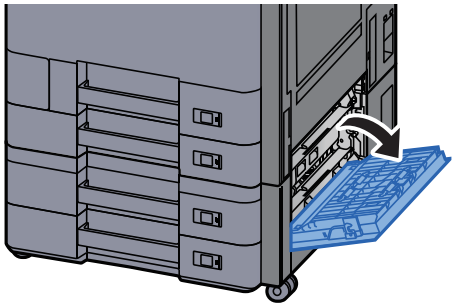

3 Remove any jammed paper.

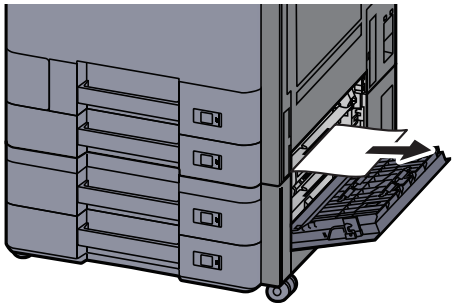

4 Pull Cassette 3 out toward you until it stops.

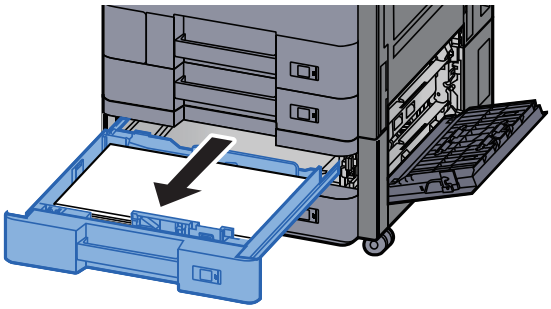

5 Remove any jammed paper.

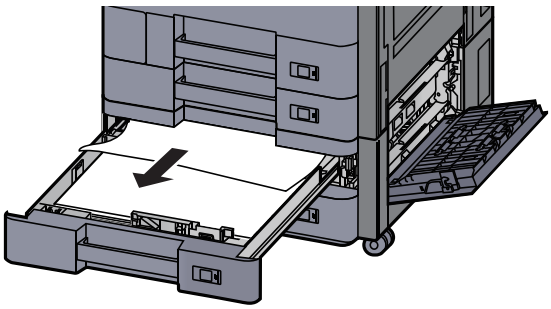

NOTE

To remove paper which is difficult to get access to, the cassette can be removed.

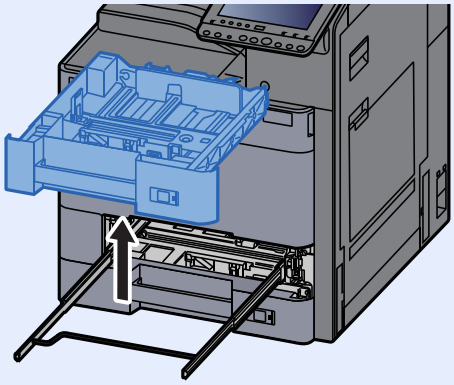

6 Push Right Cover 2 and Cassette 3 back in.

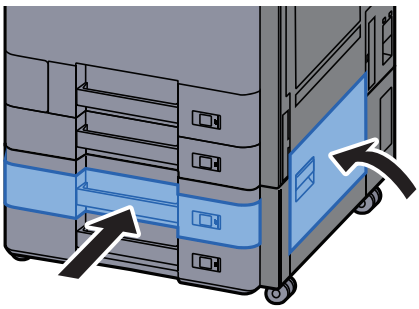

7 **If the optional side feeder is installed, return the side feeder to the original position.**

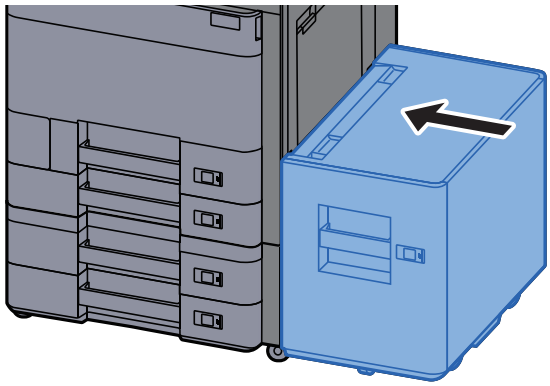

Remove any jammed paper in Cassette 3 (1,500-sheet×2)

CAUTION

- **Do not reuse jammed papers.**
- **If the paper tears during removal, be sure to remove any loose scraps of paper from inside the machine. Scraps of paper left in the machine could cause subsequent jamming.**

1 **If the optional side feeder is installed, detach the side feeder.**

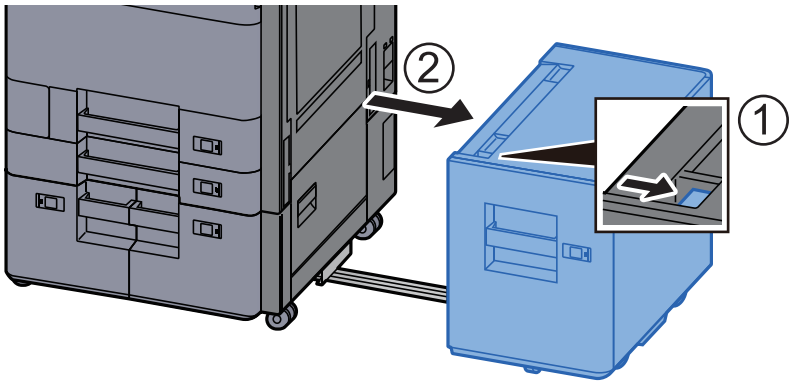

2 **Open Right Cover 2.**

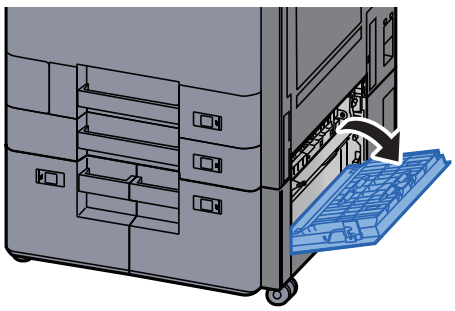

3 **Remove any jammed paper.**

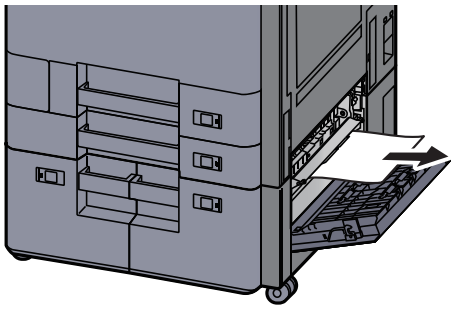

4 **Pull Cassette 3 out toward you until it stops.**

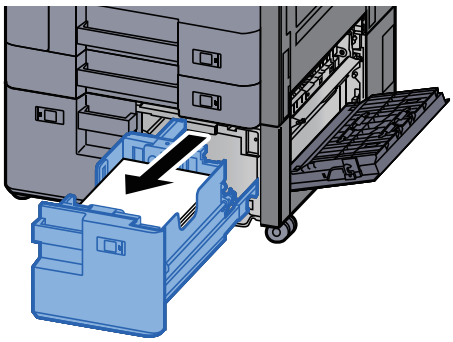

5 **Remove any jammed paper.**

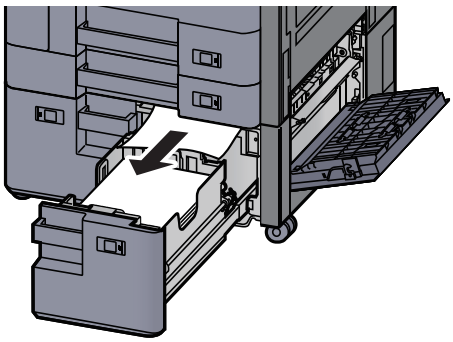

6 **Push Right Cover 2 and Cassette 3 back in.**

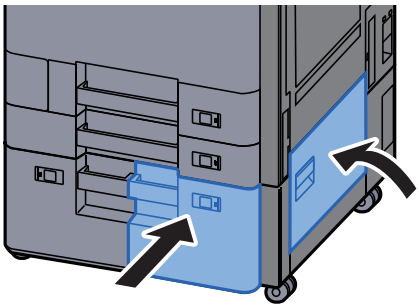

7 **If the optional side feeder is installed, return the side feeder to the original position.**

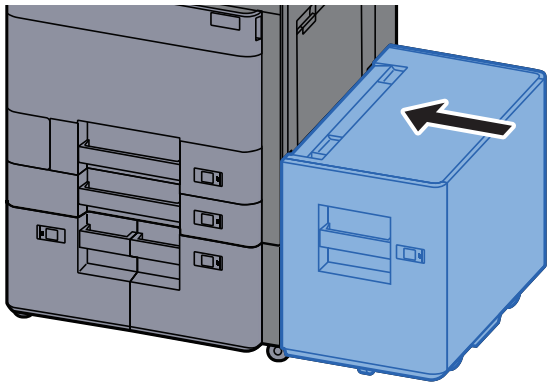

Remove any jammed paper in Cassette 4 (1,500-sheet×2)

CAUTION

- **Do not reuse jammed papers.**
- **If the paper tears during removal, be sure to remove any loose scraps of paper from inside the machine. Scraps of paper left in the machine could cause subsequent jamming.**

1 **If the optional side feeder is installed, detach the side feeder.**

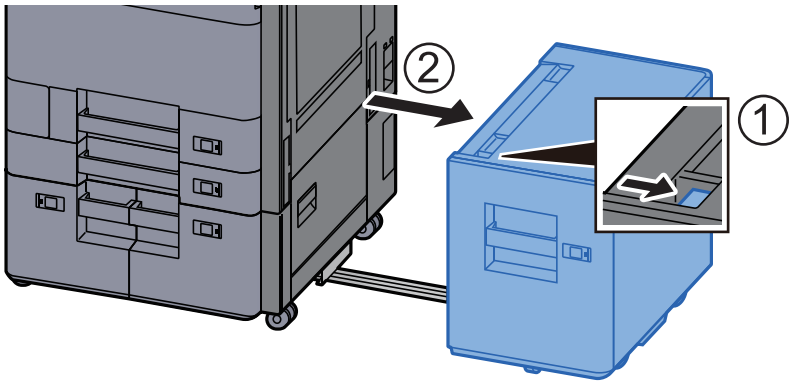

2 **Open Right Cover 2.**

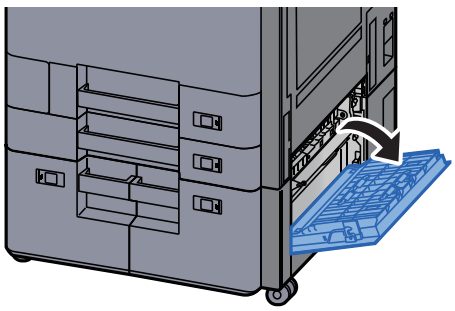

3 **Remove any jammed paper.**

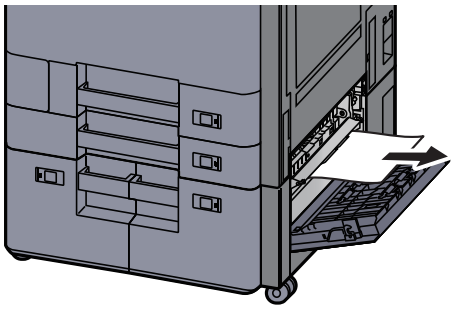

4 **Pull Cassette 3 out toward you until it stops.**

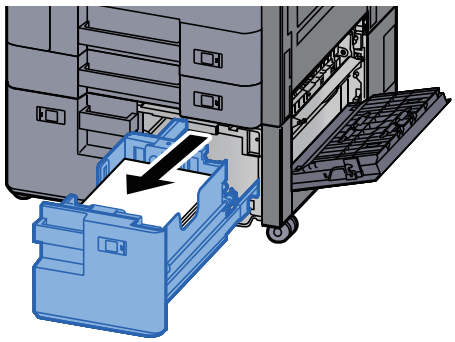

5 **Pull Cassette 4 out toward you until it stops.**

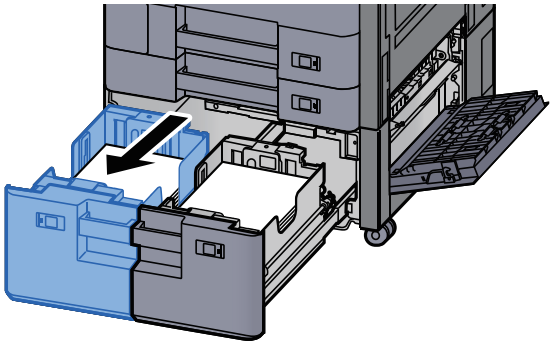

6 **Pull out paper feed unit (B1).**

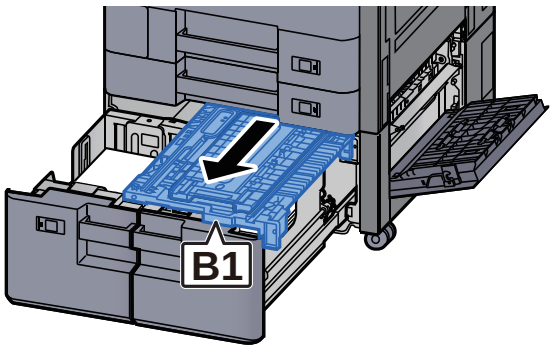

7 **Open cover (B2).**

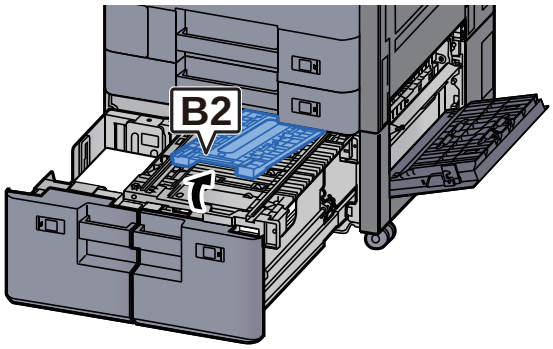

8 **Remove any jammed paper.**

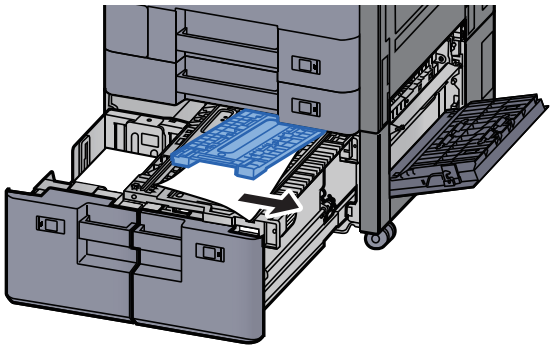

9 **Push paper feed unit, Cassette 3 and Cassette 4 back in.**

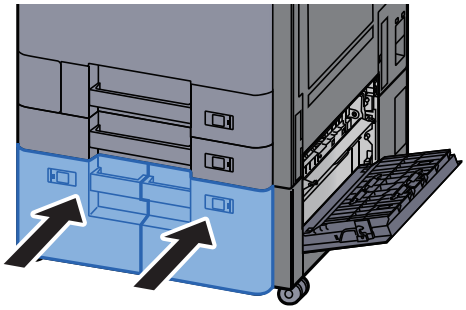

10 **Return the cover to the original position.**

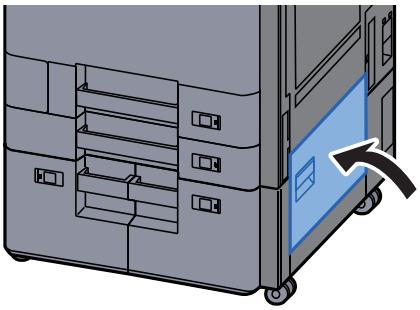

11 **If the optional side feeder is installed, return the side feeder to the original position.**

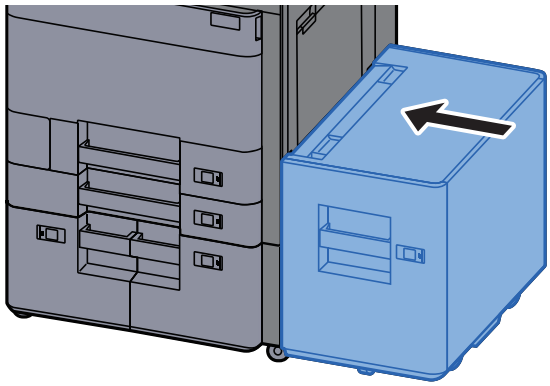

Remove any jammed paper in Cassette 5 (Side Feeder)

CAUTION

- **Do not reuse jammed papers.**
- **If the paper tears during removal, be sure to remove any loose scraps of paper from inside the machine. Scraps of paper left in the machine could cause subsequent jamming.**

1 **Detach the side feeder.**

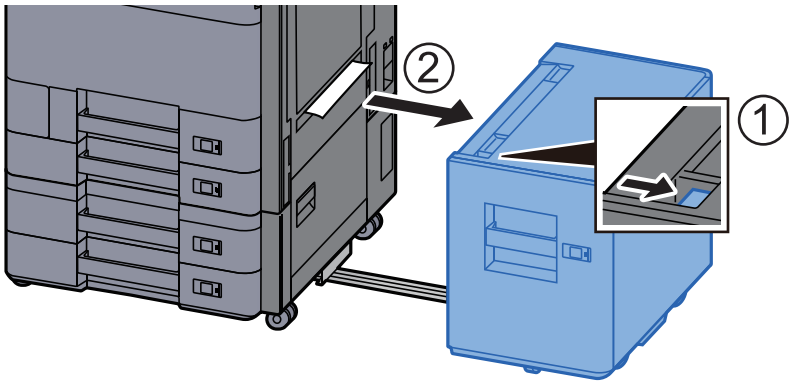

2 **Remove any jammed paper.**

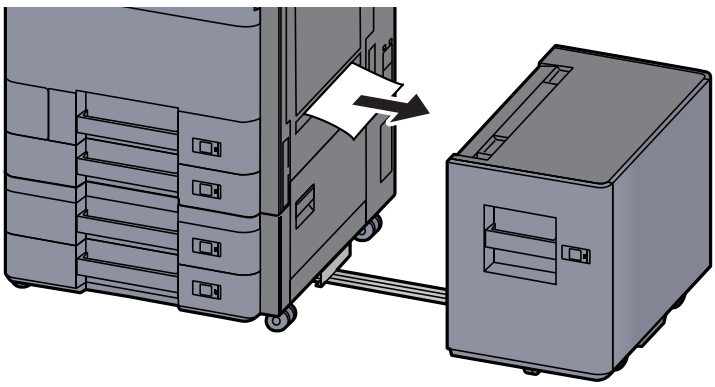

3 **Pull Cassette 5 out toward you until it stops.**

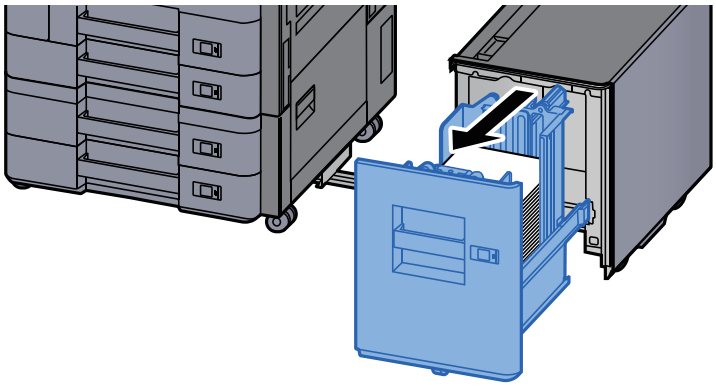

4 **Remove any jammed paper.**

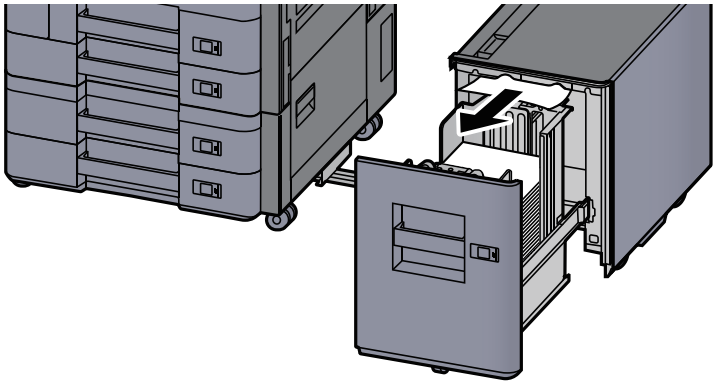

5 **Return the Cassette 5 and side feeder to the original position.**

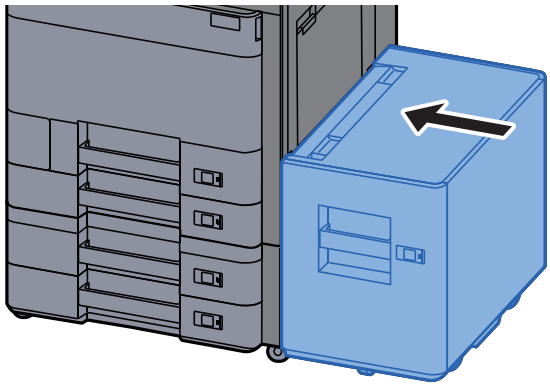

Remove any jammed paper in the Multi Purpose Tray

CAUTION

- **Do not reuse jammed papers.**
- **If the paper tears during removal, be sure to remove any loose scraps of paper from inside the machine. Scraps of paper left in the machine could cause subsequent jamming.**

1 **Remove any jammed paper.**



2 **Remove all the paper.**



3 **Reload the paper.**



Remove any jammed paper in Right Cover 1

CAUTION

The fixing unit is extremely hot. Take sufficient care when working in this area, as there is a danger of getting burned.

1 **If the optional side feeder is installed, detach the side feeder.**

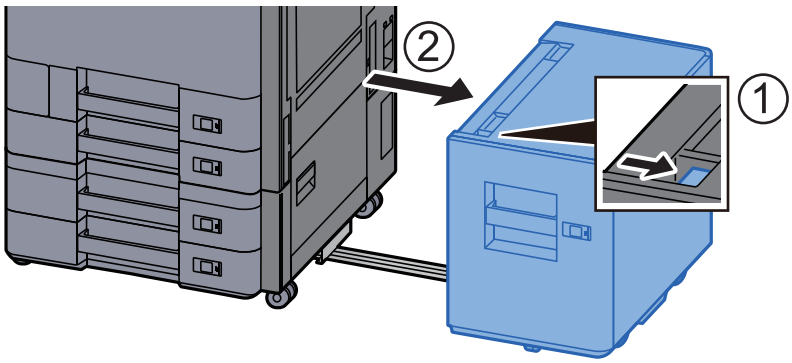

2 **Open Right Cover 1.**

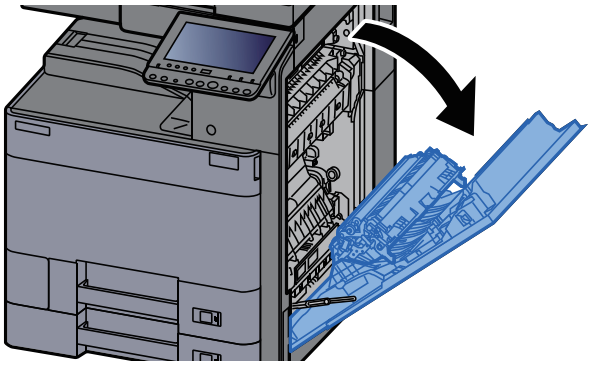

3 **Close the duplex unit (A5).**

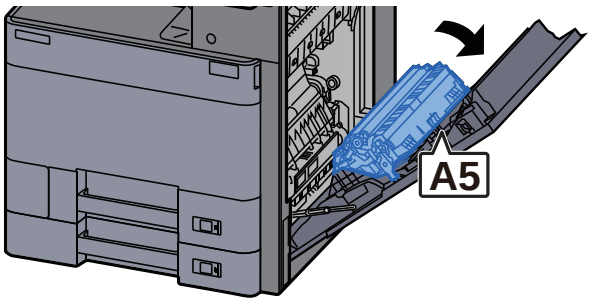

4 **Remove any jammed paper.**

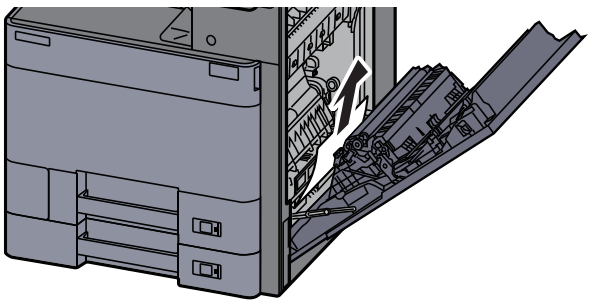

5 **Open the paper feed unit cover (A1).**

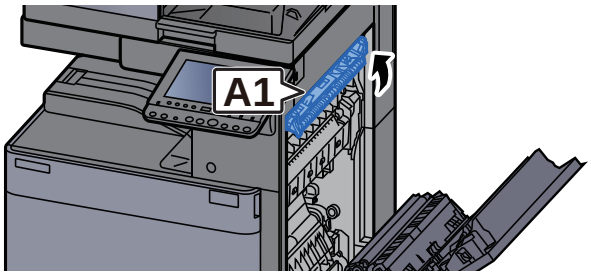

6 **Remove any jammed paper.**

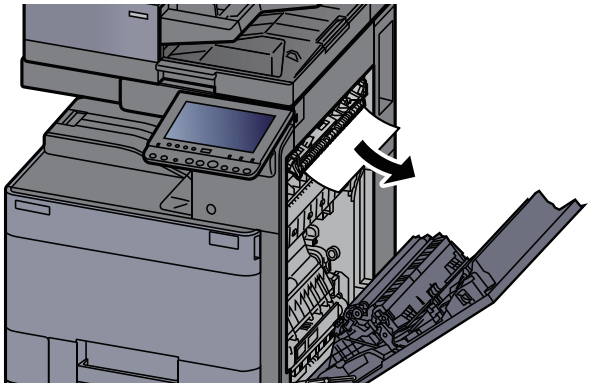

7 **Open the fuser cover (A2).**

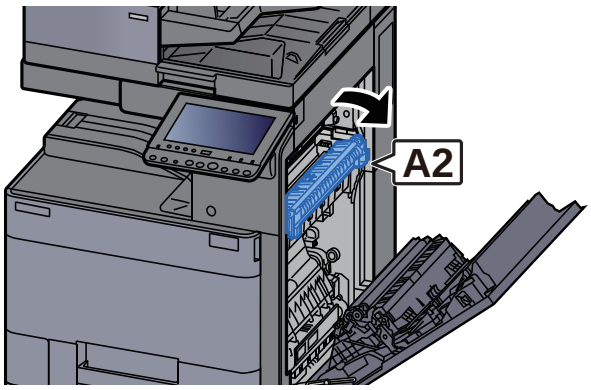

8 **Remove any jammed paper.**

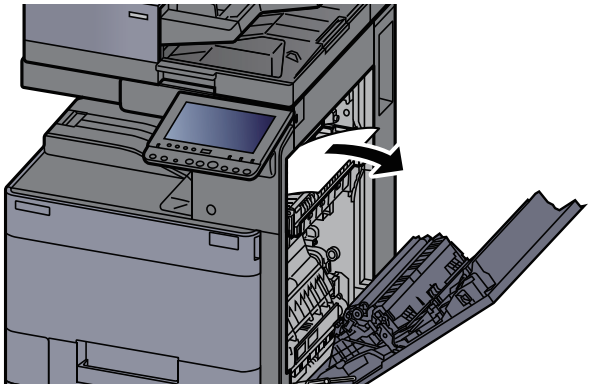

9 **Open the cover (A3).**

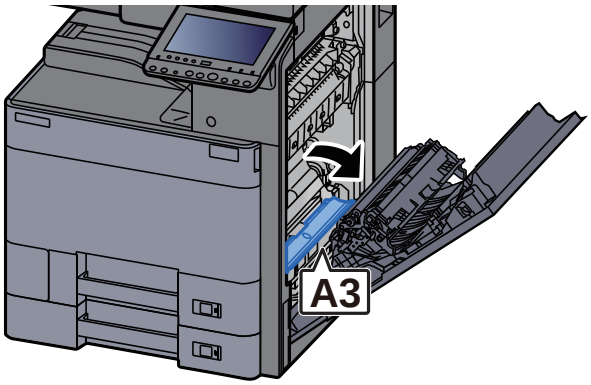

10 **Remove any jammed paper.**

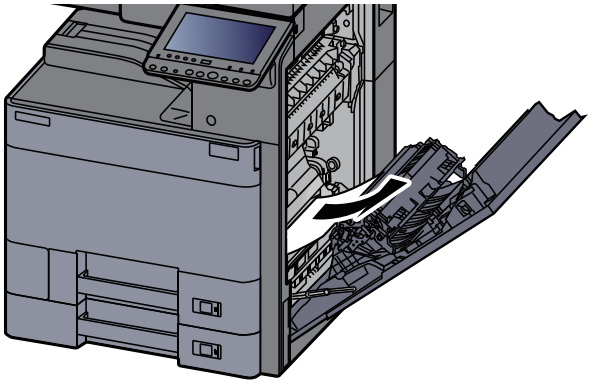

11 **Lift the cover (A4).**

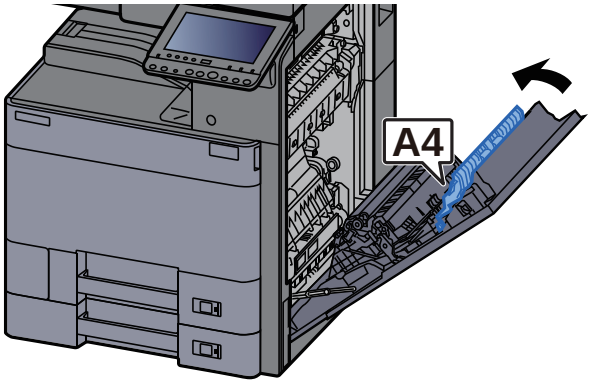

12 **Remove any jammed paper.**

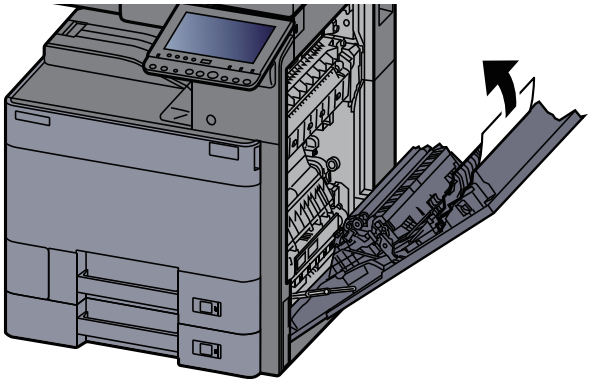

13 Lift the duplex unit (A5).

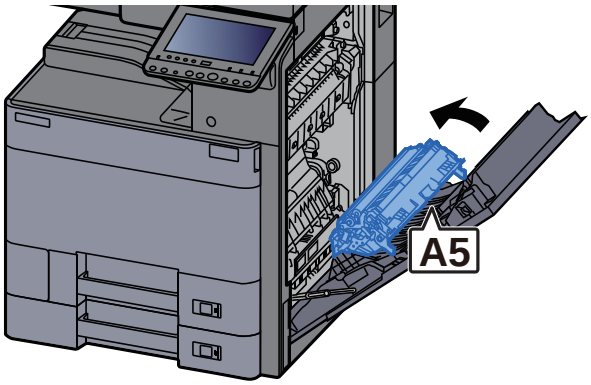

14 Remove any jammed paper.

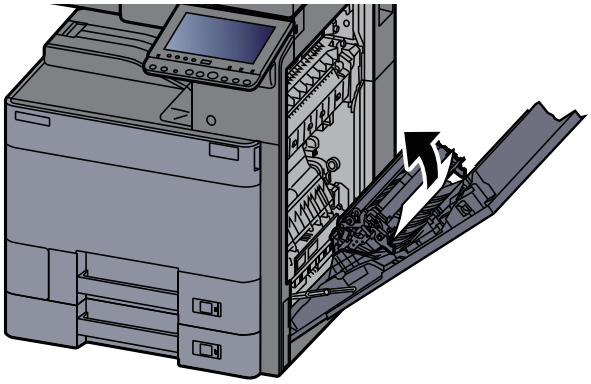

15 Remove the paper from the paper ejector.

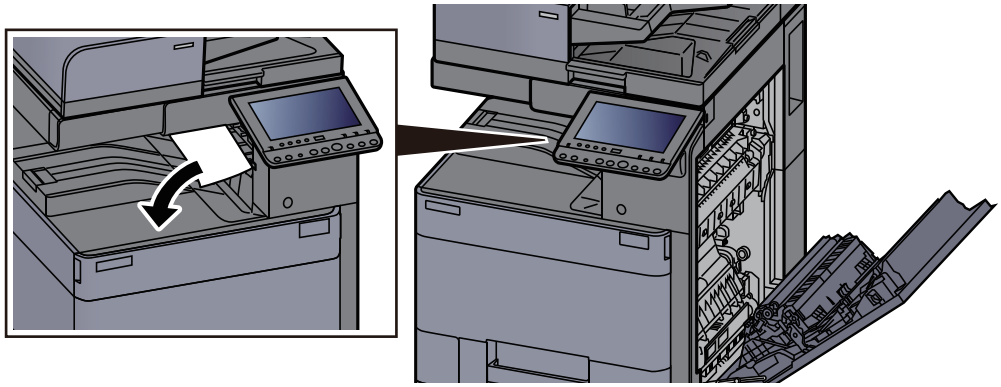

16 Return the cover to the original position.

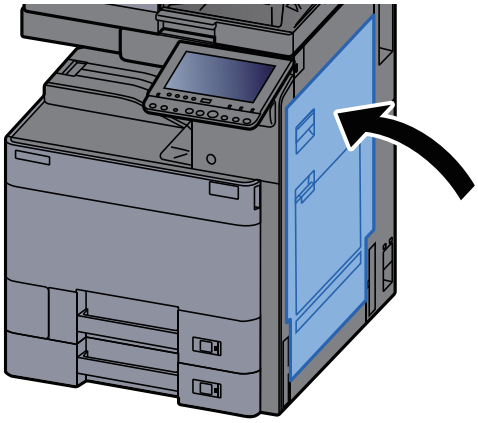

17 **If the optional side feeder is installed, return the side feeder to the original position.**

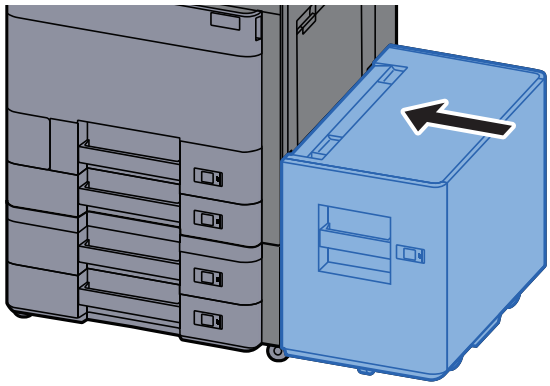

Remove any jammed paper in Right Cover 2 (500-sheet×2)

CAUTION

- **Do not reuse jammed papers.**
- **If the paper tears during removal, be sure to remove any loose scraps of paper from inside the machine. Scraps of paper left in the machine could cause subsequent jamming.**

1 **If the optional side feeder is installed, detach the side feeder.**

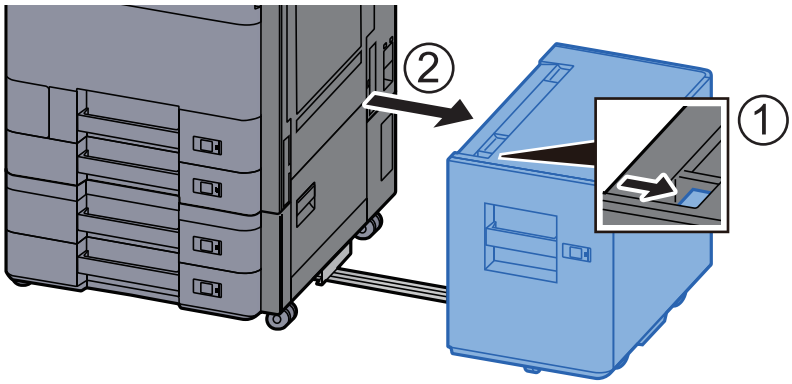

2 **Open Right Cover 2.**

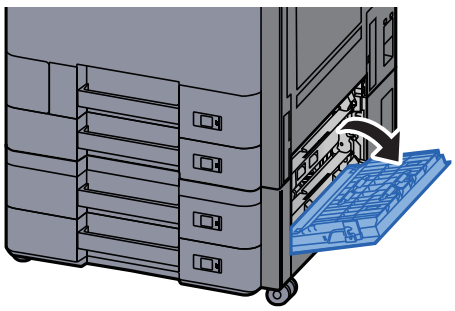

3 **Remove any jammed paper.**

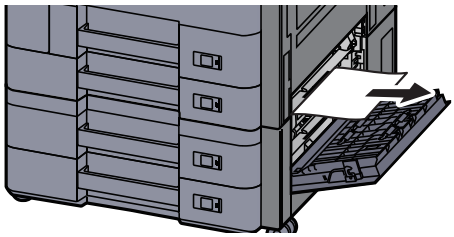

4 **Return the cover to the original position.**

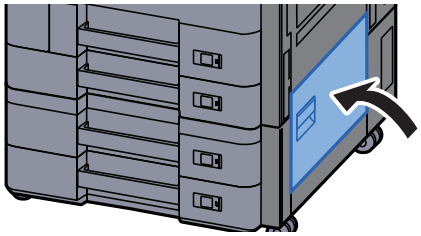

5 **If the optional side feeder is installed, return the side feeder to the original position.**

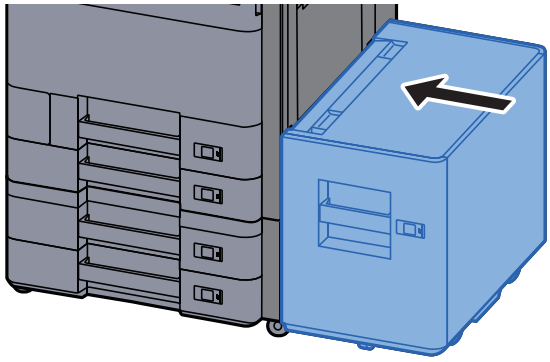

Remove any jammed paper in Right Cover 2 (1,500-sheet×2)

CAUTION

- **Do not reuse jammed papers.**
- **If the paper tears during removal, be sure to remove any loose scraps of paper from inside the machine. Scraps of paper left in the machine could cause subsequent jamming.**

1 **If the optional side feeder is installed, detach the side feeder.**

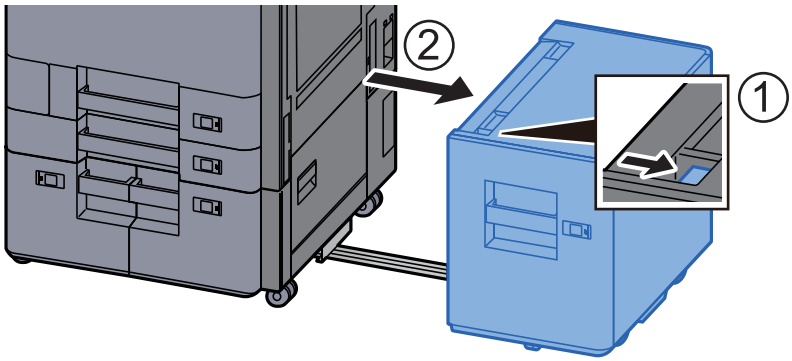

2 **Open Right Cover 2.**

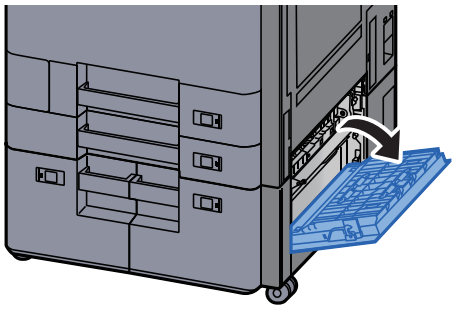

3 **Remove any jammed paper.**

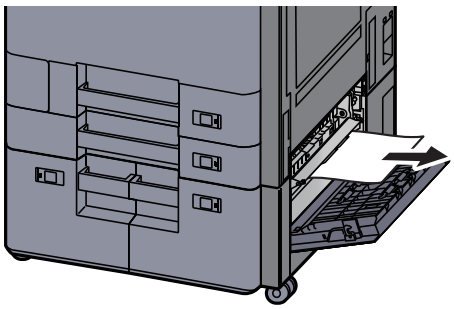

4 **Return the cover to the original position.**

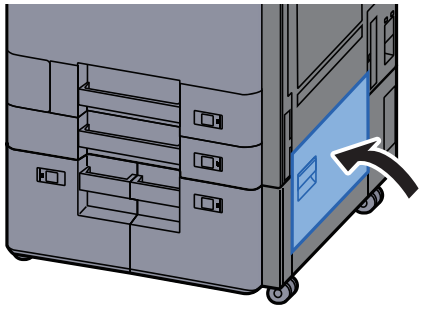

5 **If the optional side feeder is installed, return the side feeder to the original position.**

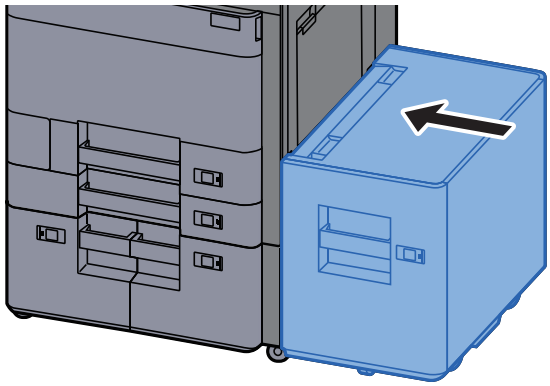

Remove any jammed paper in the Bridge Unit

CAUTION

- **Do not reuse jammed papers.**
- **If the paper tears during removal, be sure to remove any loose scraps of paper from inside the machine. Scraps of paper left in the machine could cause subsequent jamming.**

1 Open the bridge unit cover.

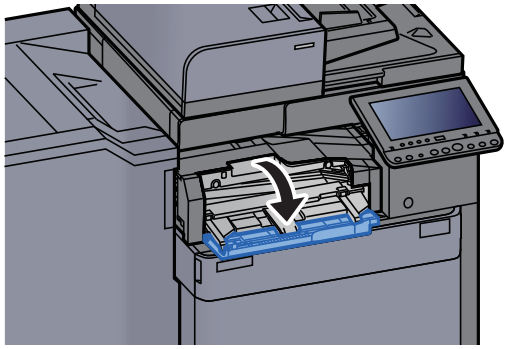

2 Remove any jammed paper.

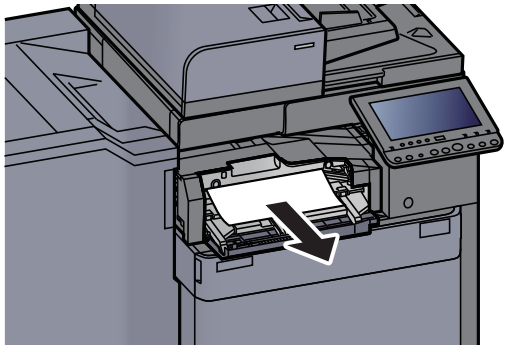

3 Close the cover.

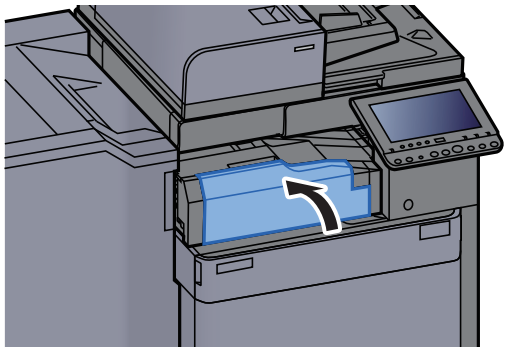

Remove any jammed paper in the Mailbox

CAUTION

- **Do not reuse jammed papers.**
- **If the paper tears during removal, be sure to remove any loose scraps of paper from inside the machine. Scraps of paper left in the machine could cause subsequent jamming.**

1 **Open the mailbox cover.**

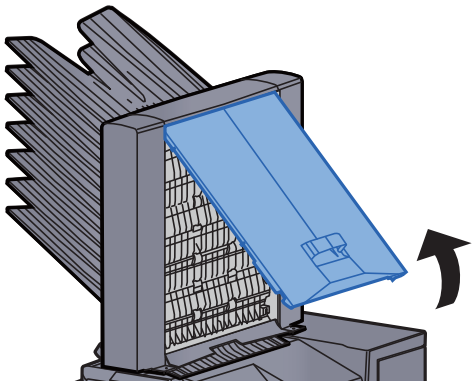

2 **Remove any jammed paper.**

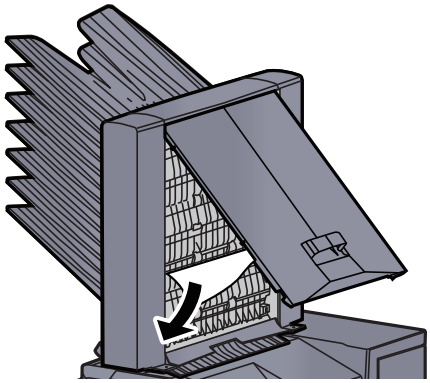

3 **Close the cover.**

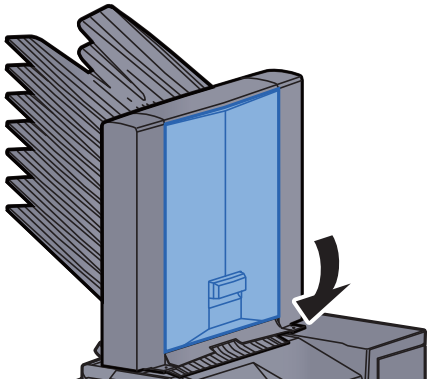

Remove any jammed paper in the Inner Finisher

CAUTION

- **Do not reuse jammed papers.**
- **If the paper tears during removal, be sure to remove any loose scraps of paper from inside the machine. Scraps of paper left in the machine could cause subsequent jamming.**

1 **Remove any jammed paper.**

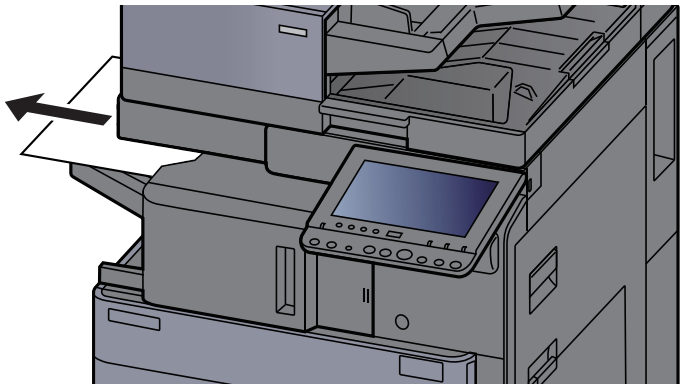

2 **Open the inner finisher unit.**

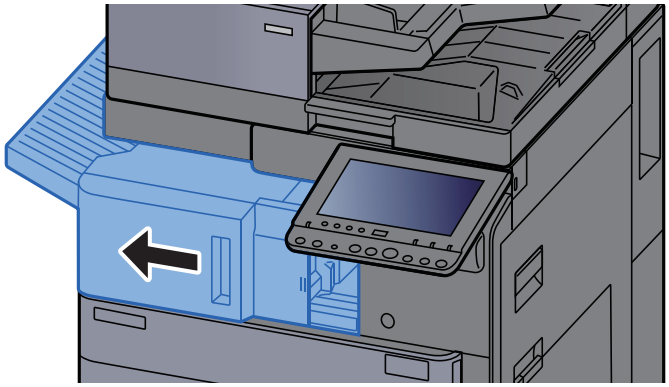

3 **Remove any jammed paper.**

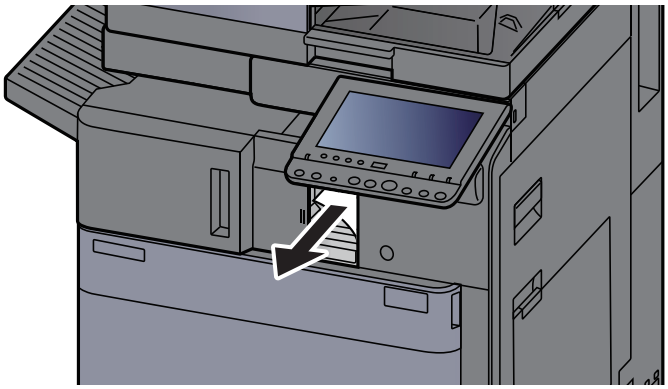

4 **Return the unit to the original position.**

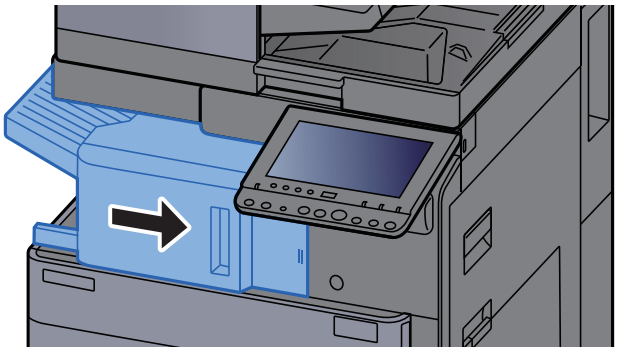

Remove any jammed paper in the Document Processor (Reverse Automatic)

CAUTION

If the paper tears during removal, be sure to remove any loose scraps of paper from inside the machine. Scraps of paper left in the machine could cause subsequent jamming.

1 **Remove the originals from the Original Table.**

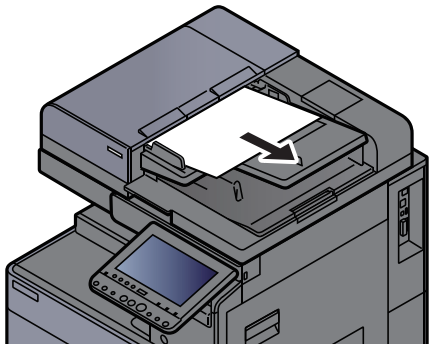

2 **Open the document processor cover.**

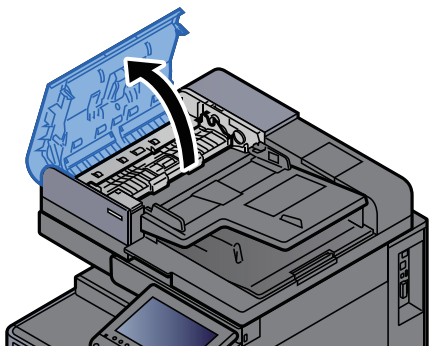

3 **Turn dial (C1) to remove any jammed paper.**

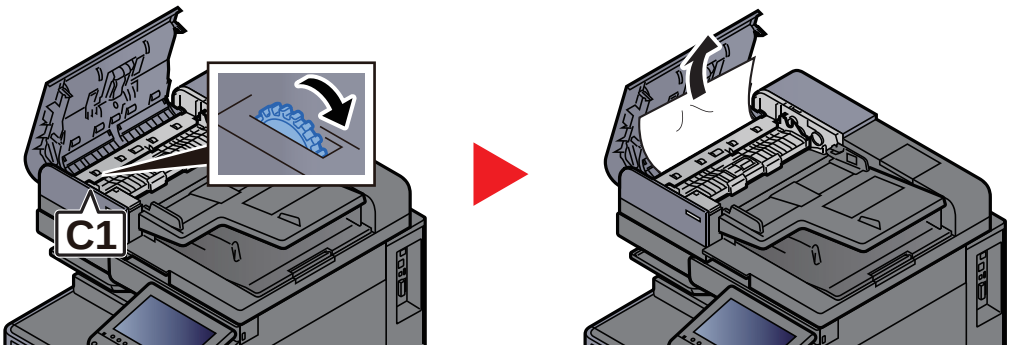

4 **Open reverse unit (C2) and remove any jammed paper.**

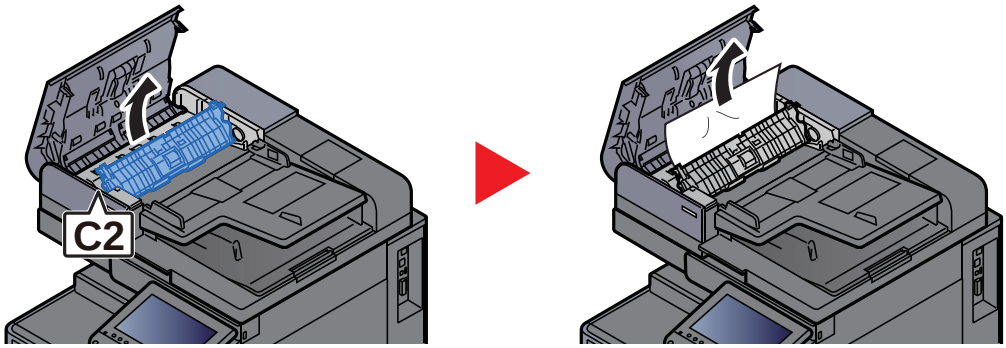

5 **Turn dial (C1) to remove any jammed paper.**

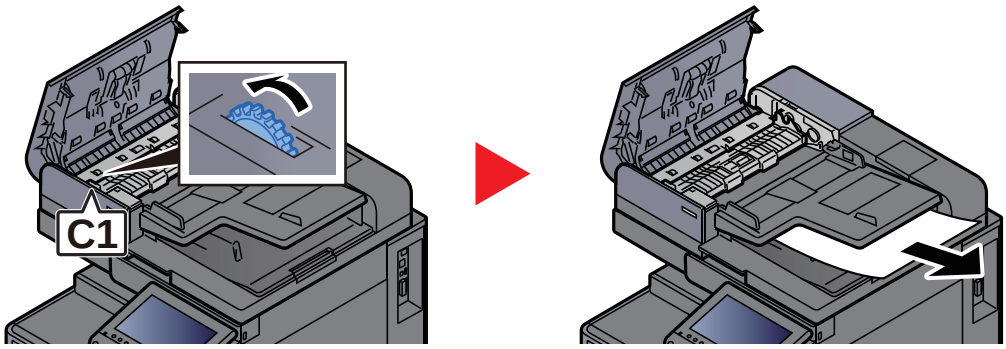

6 **Return the cover to the original position.**

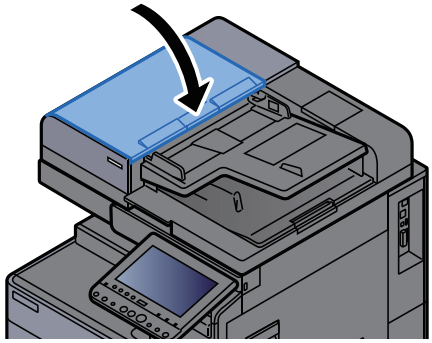

Remove any jammed paper in the Document Processor (Dual Scan)

CAUTION

If the paper tears during removal, be sure to remove any loose scraps of paper from inside the machine. Scraps of paper left in the machine could cause subsequent jamming.

1 Remove the originals from the Original Table.

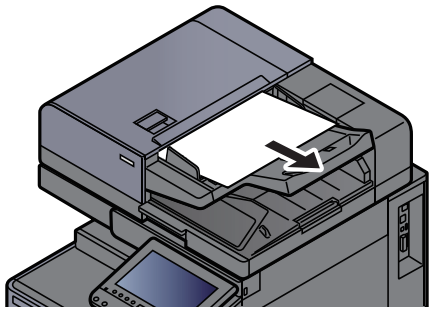

2 Open the document processor cover.

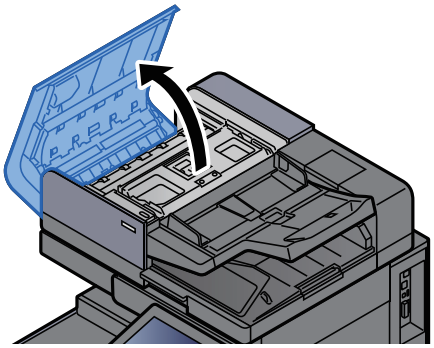

3 Turn dial (C) to remove any jammed paper.

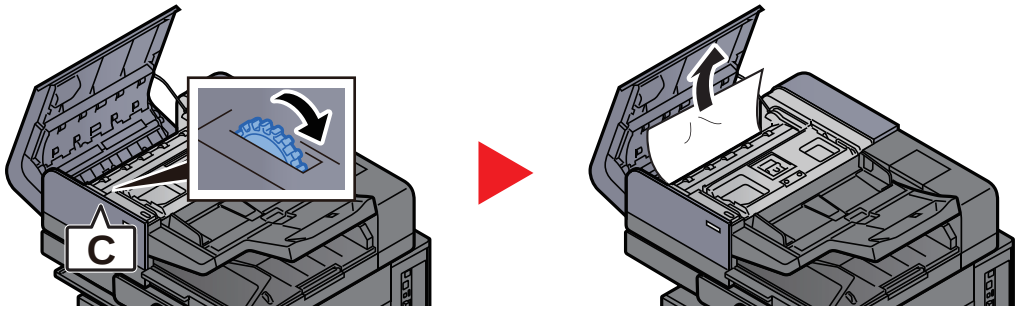

4 Turn dial (C) to remove any jammed paper.

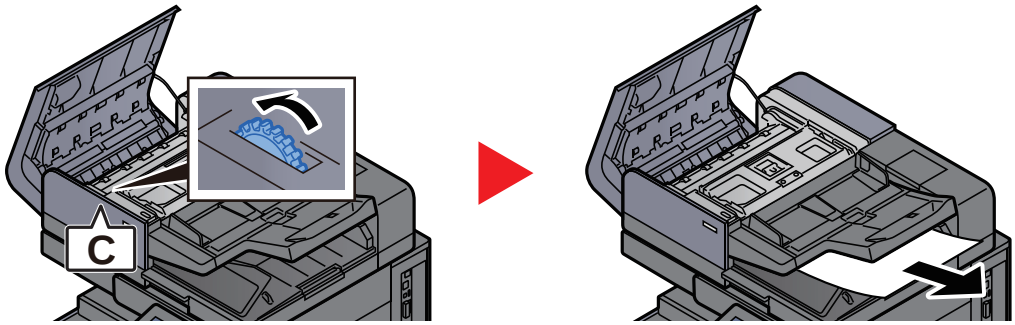

5 **Return the cover to the original position.**

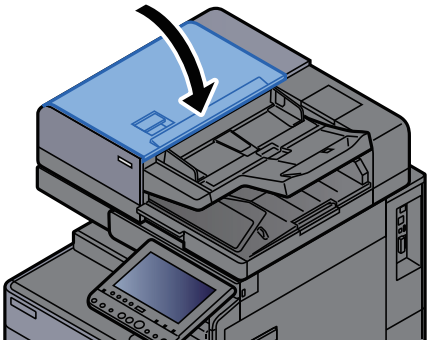

Remove any jammed paper in the 1,000-Sheet Finisher

CAUTION

- **Do not reuse jammed papers.**
- **If the paper tears during removal, be sure to remove any loose scraps of paper from inside the machine. Scraps of paper left in the machine could cause subsequent jamming.**

1 **Remove any jammed paper.**

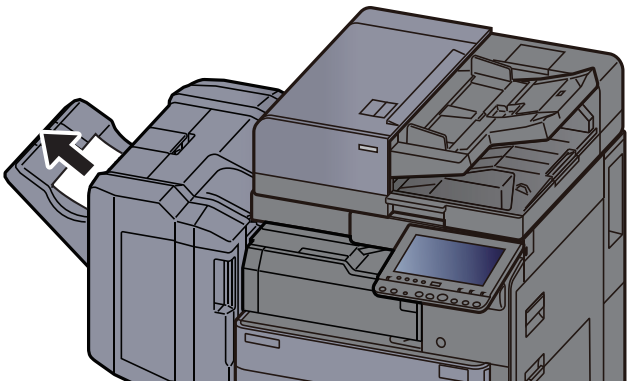

2 **Open the finisher top cover.**

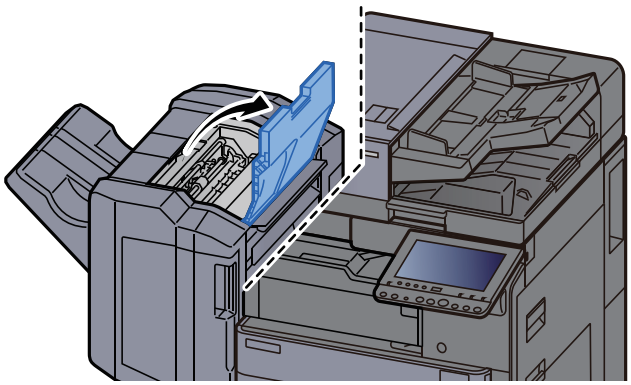

3 **Open the conveyor guide (D2).**

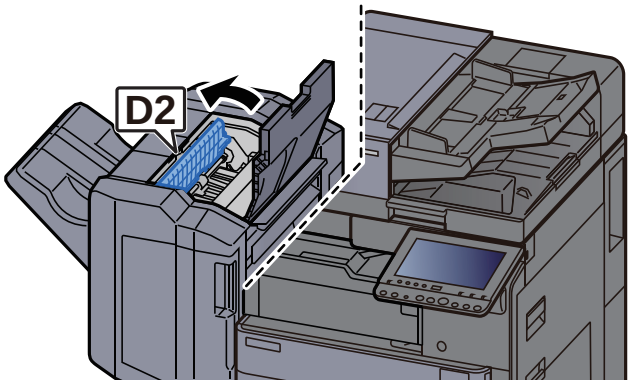

4 **Remove any jammed paper.**

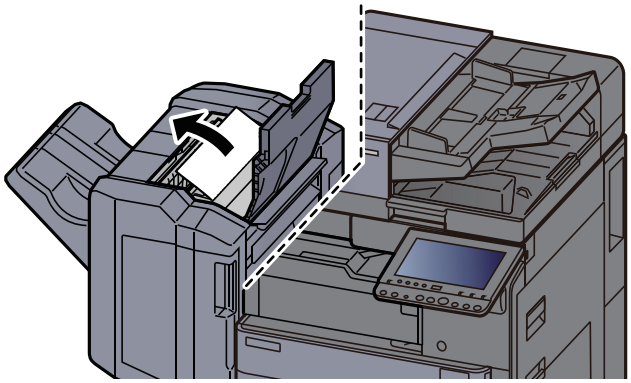

5 **Return the conveyor guide (D2) to the original position.**

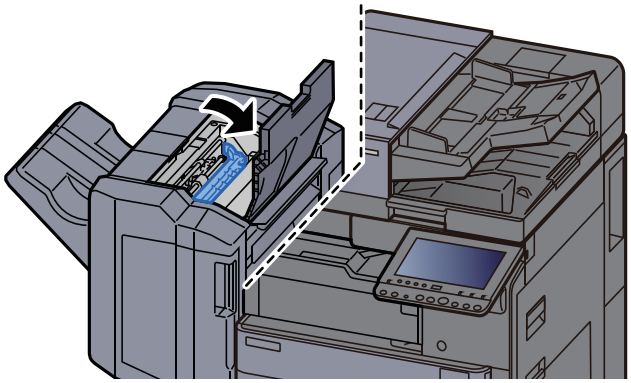

6 **Open the finisher front cover.**

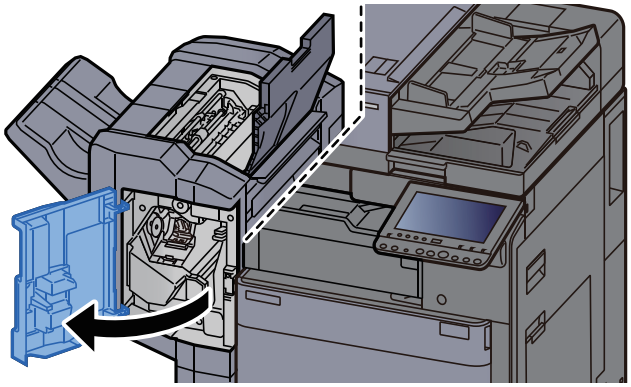

7 **Open the conveyor guide (D1).**

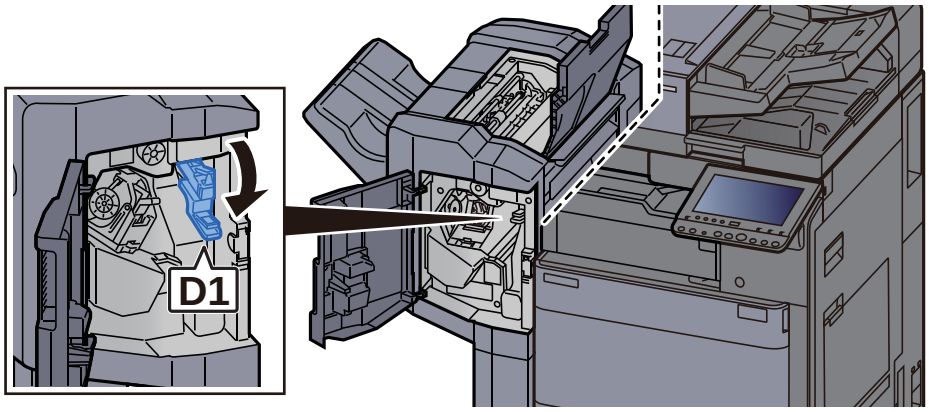

8 **Remove any jammed paper.**

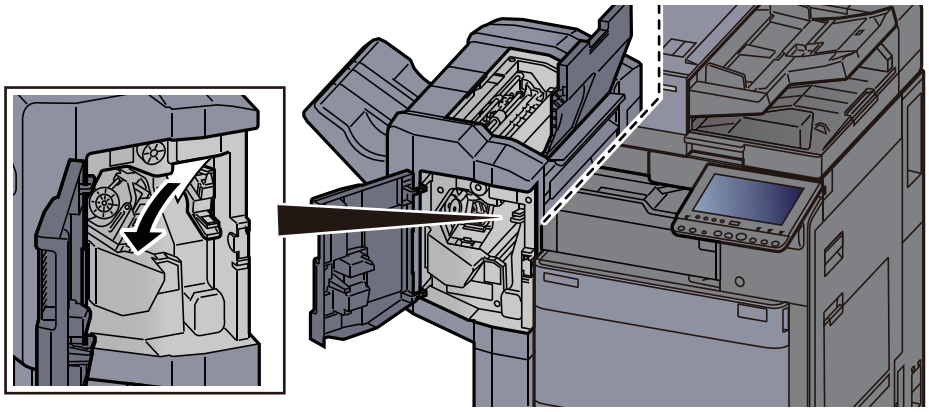

9 **Return the conveyor guide (D1) to the original position.**

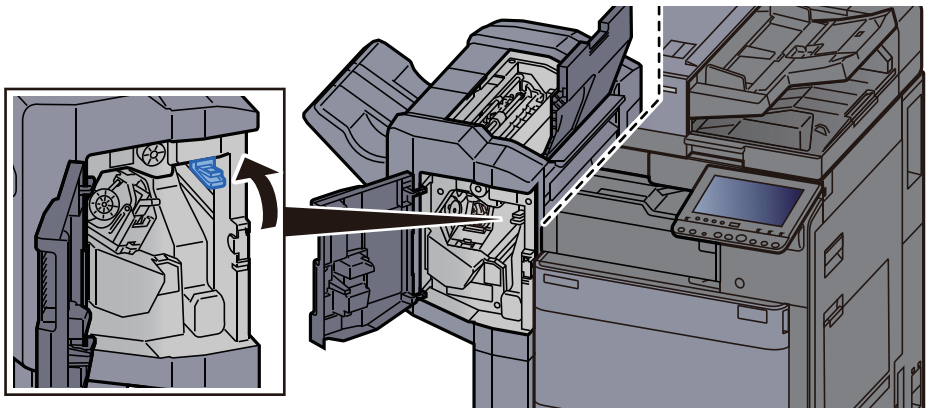

10 **Return the covers to the original position.**

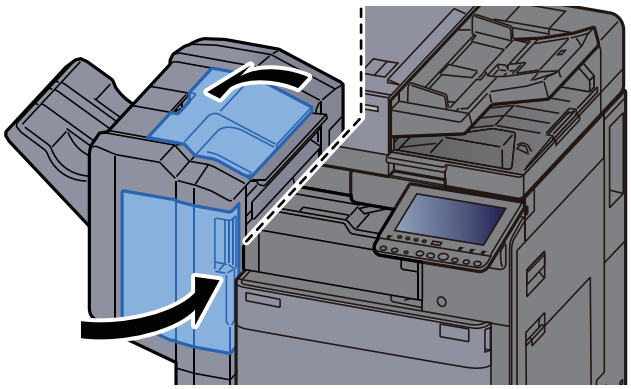

Remove any jammed paper in the 4,000-sheet Finisher (Inner)

CAUTION

- **Do not reuse jammed papers.**
- **If the paper tears during removal, be sure to remove any loose scraps of paper from inside the machine. Scraps of paper left in the machine could cause subsequent jamming.**

1 Open the finisher front cover 1.

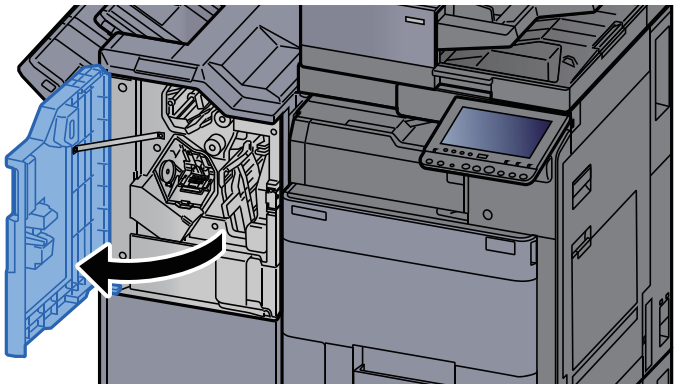

2 Open the conveyor guide (D1).

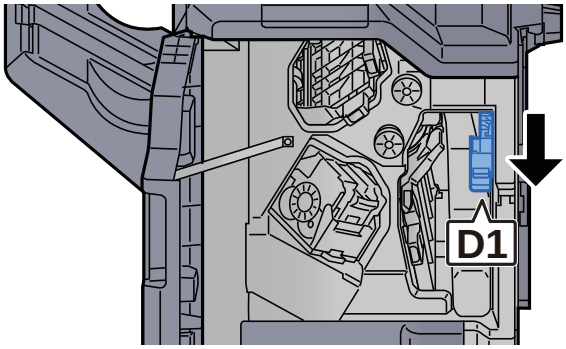

3 Remove any jammed paper.

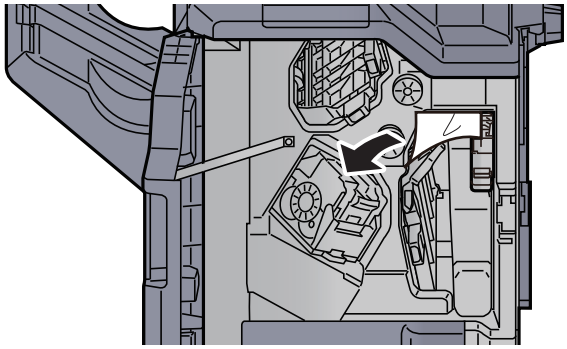

4 **Return the conveyor guide (D1) to the original position.**

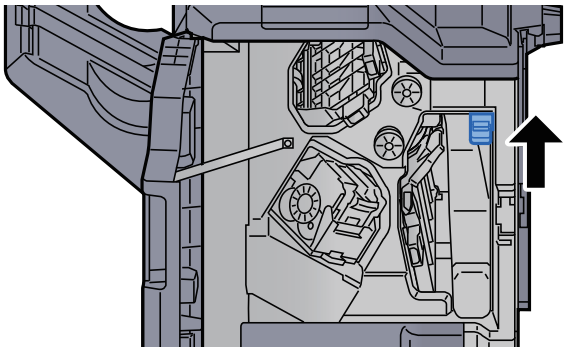

5 **Return the cover to the original position.**

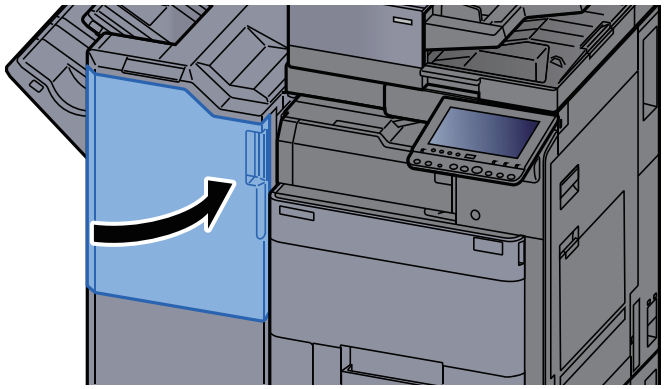

Remove any jammed paper in the 4,000-sheet Finisher (Tray A)

CAUTION

- **Do not reuse jammed papers.**
- **If the paper tears during removal, be sure to remove any loose scraps of paper from inside the machine. Scraps of paper left in the machine could cause subsequent jamming.**

1 **Remove any jammed paper.**

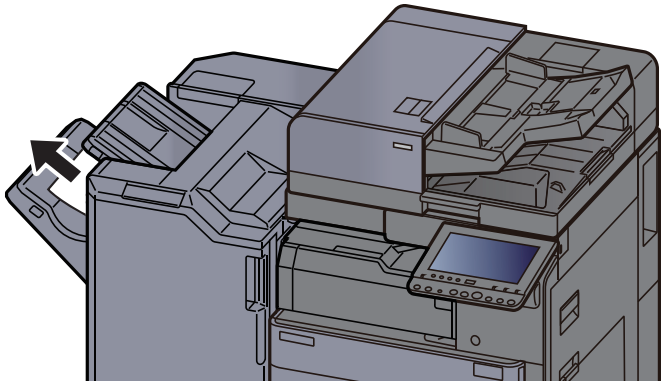

2 **Open the finisher front cover 1.**

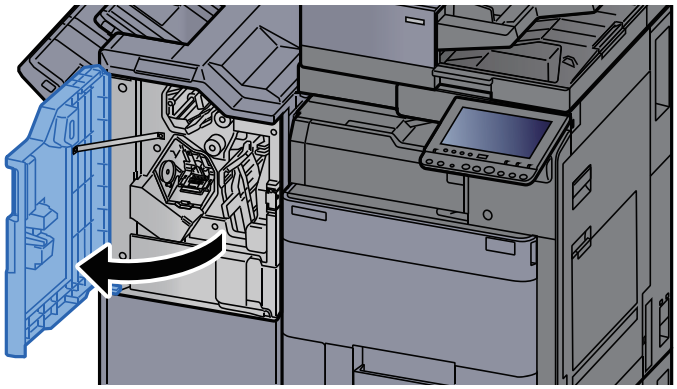

3 **Open the conveyor guide (D6).**

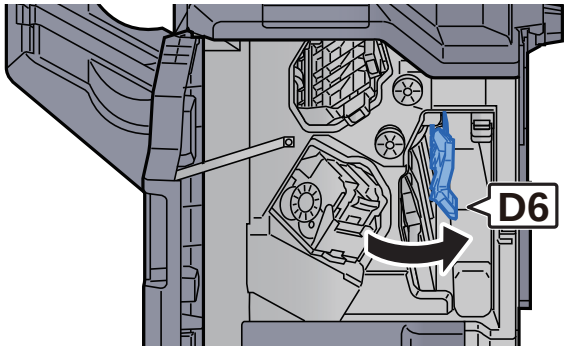

4 **Remove any jammed paper.**

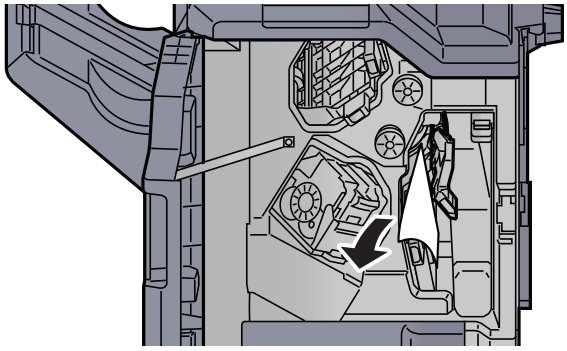

5 **Return the conveyor guide (D6) to the original position.**

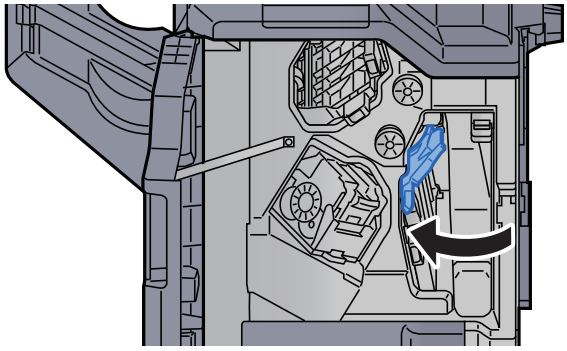

6 **Open the conveyor guide (D4).**

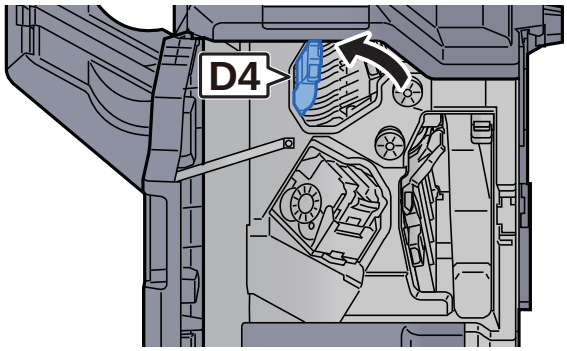

7 **Turn knob (D5).**

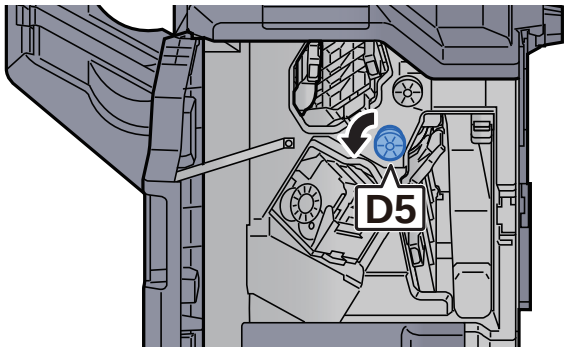

8 **Remove any jammed paper.**

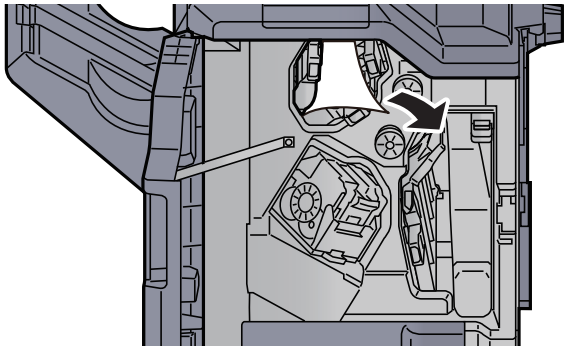

9 **Return the conveyor guide (D4) to the original position.**

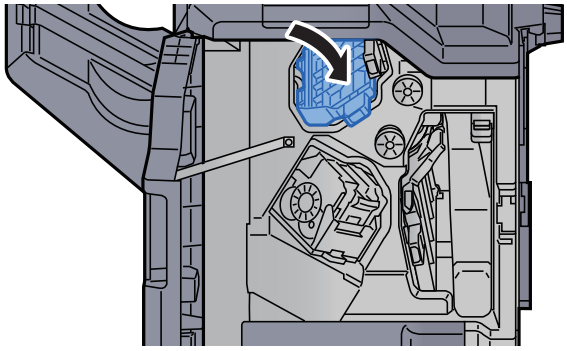

10 **Open the conveyor guide (D1).**

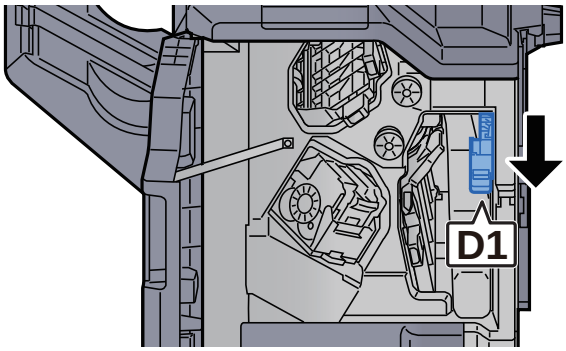

11 **Remove any jammed paper.**

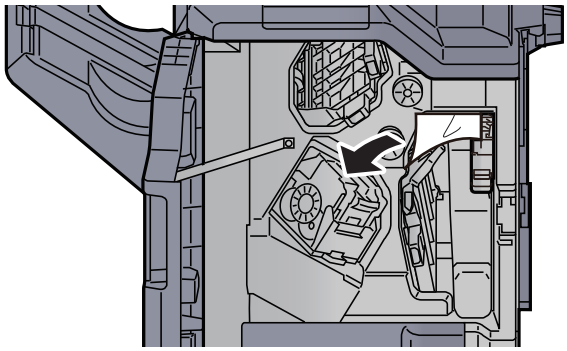

12 **Return the conveyor guide (D1) to the original position.**

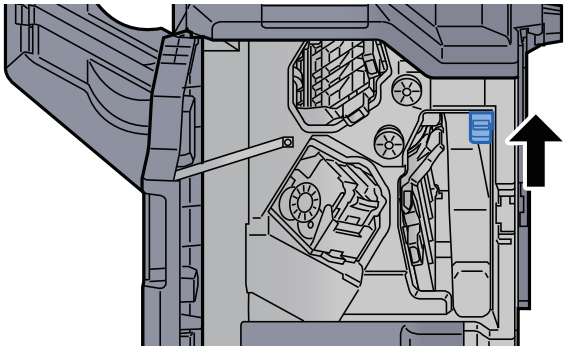

13 **Return the cover to the original position.**

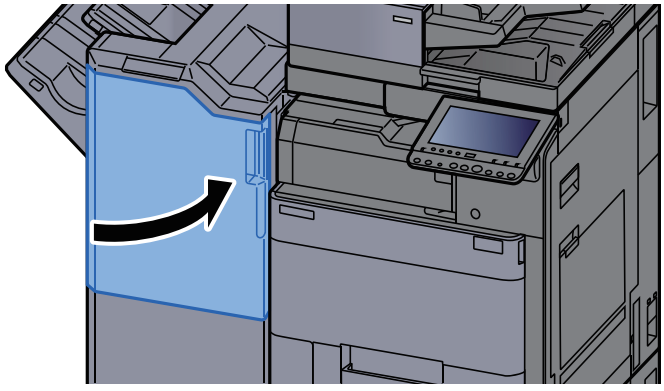

Remove any jammed paper in the 4,000-sheet Finisher (Tray B)

CAUTION

- **Do not reuse jammed papers.**
- **If the paper tears during removal, be sure to remove any loose scraps of paper from inside the machine. Scraps of paper left in the machine could cause subsequent jamming.**

1 Remove any jammed paper.

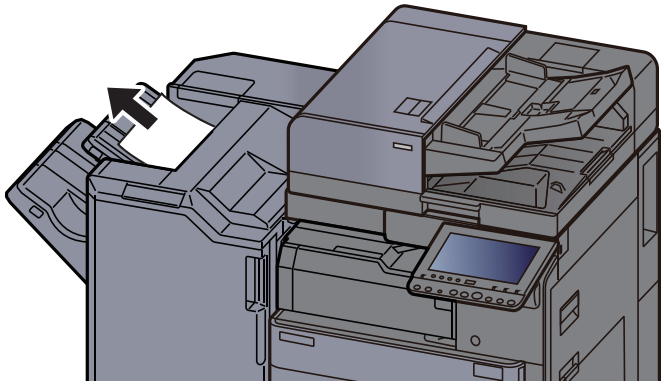

2 Open the finisher front cover 1.

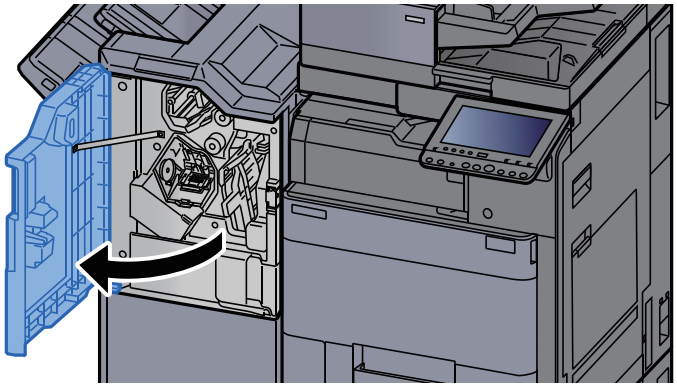

3 Open the conveyor guide (D2).

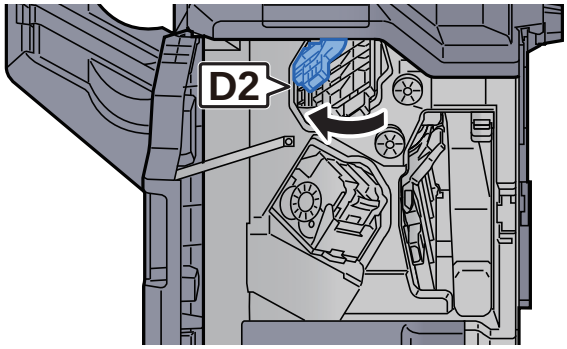

4 **Turn knob (D3).**

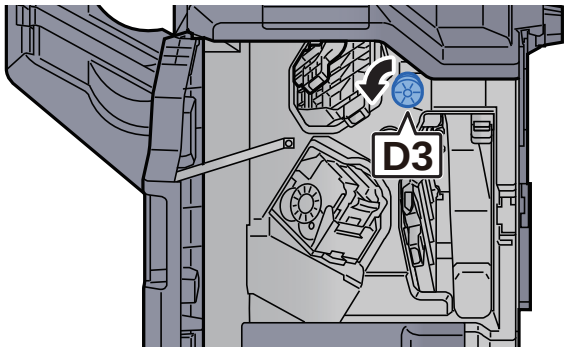

5 **Remove any jammed paper.**

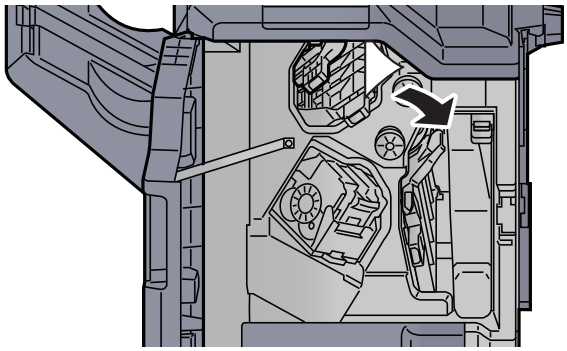

6 **Return the conveyor guide (D2) to the original position.**

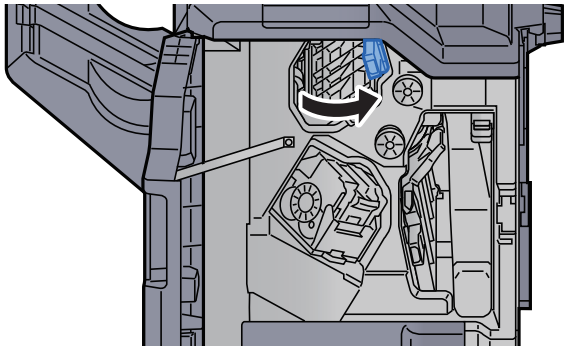

7 **Open the conveyor guide (D1).**

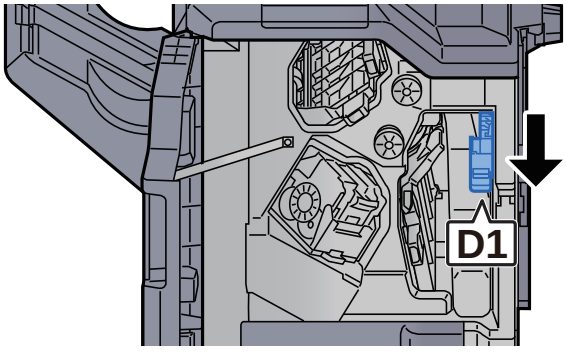

8 **Remove any jammed paper.**

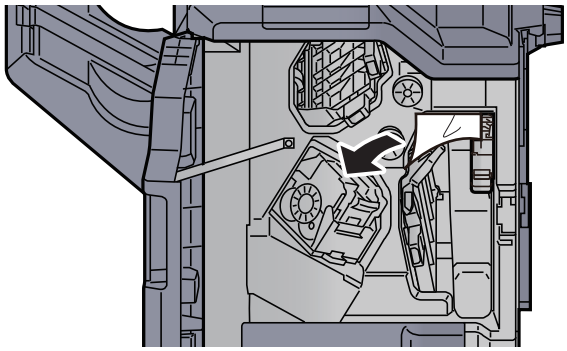

9 **Return the conveyor guide (D1) to the original position.**

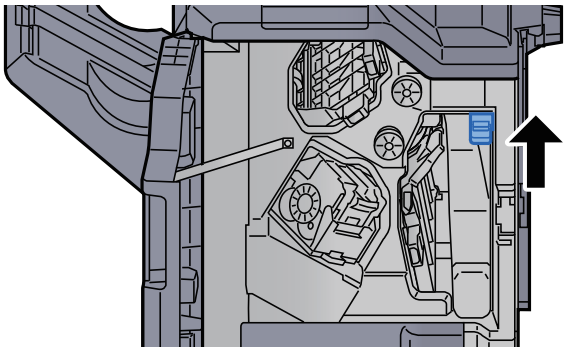

10 **Return the cover to the original position.**

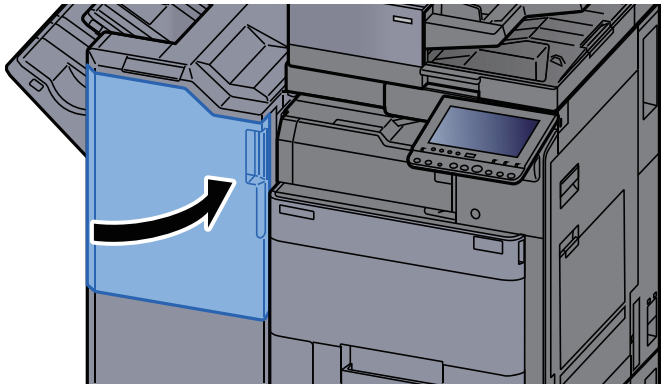

Remove any jammed paper in the Folding Unit

CAUTION

- **Do not reuse jammed papers.**
- **If the paper tears during removal, be sure to remove any loose scraps of paper from inside the machine. Scraps of paper left in the machine could cause subsequent jamming.**

1 Open the finisher front cover 1 and 2.

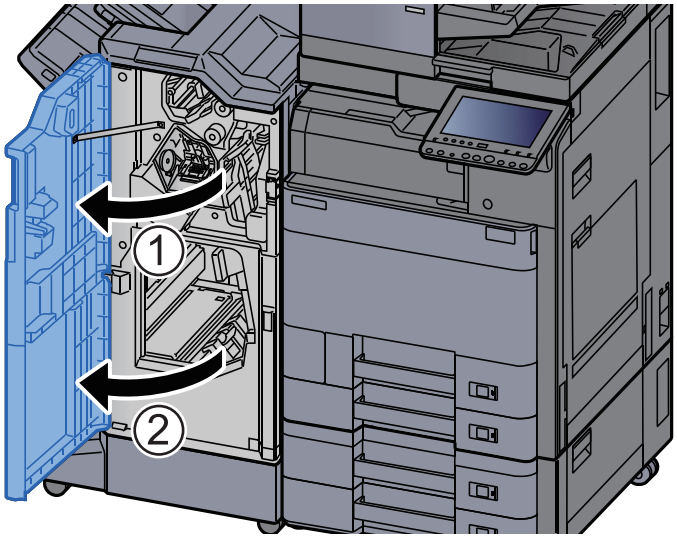

2 Open the conveyor guide (D7).

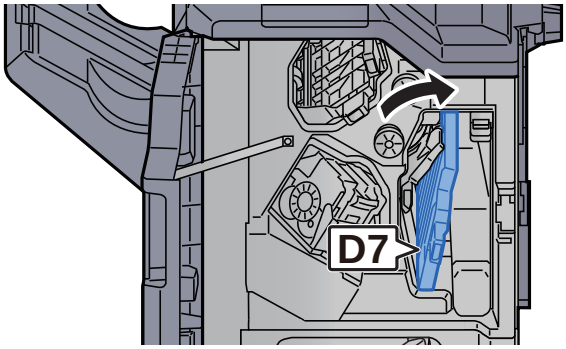

3 Remove any jammed paper.

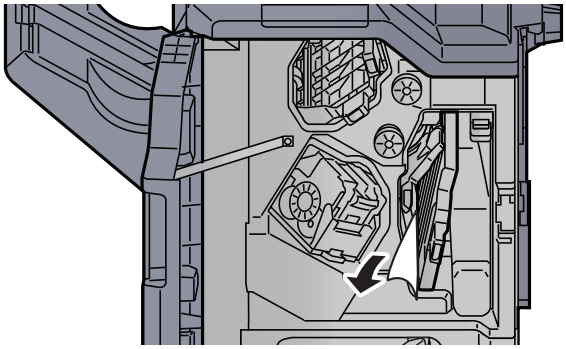

4 **Return the conveyor guide (D7) to the original position.**

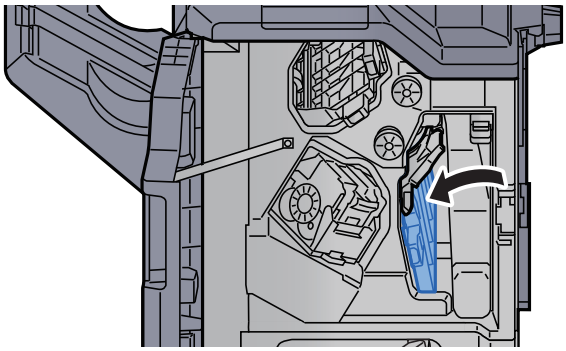

5 **Open the conveyor guide (D8).**

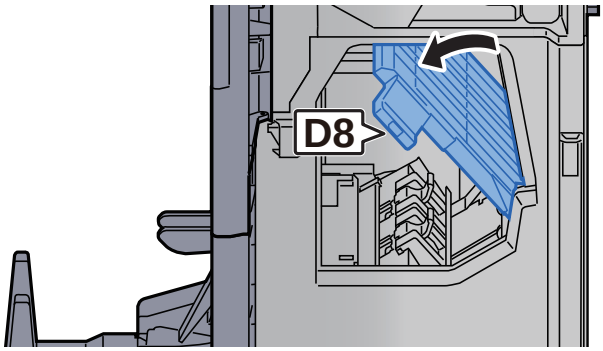

6 **Remove any jammed paper.**

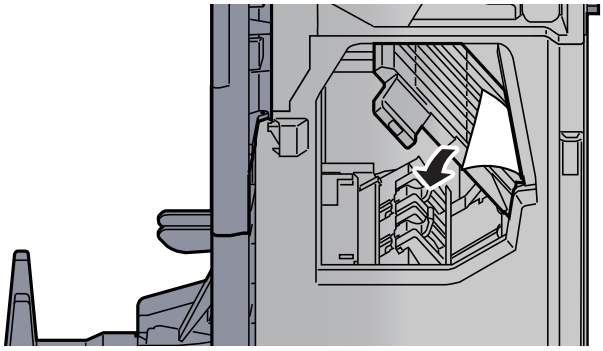

7 **Return the conveyor guide (D8) to the original position.**

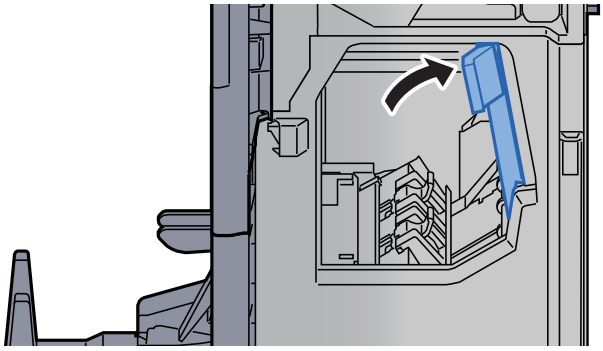

8 **Remove paper from inside the finisher.**

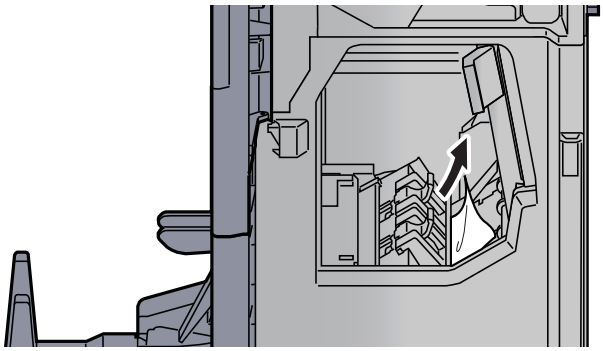

9 **Return the covers to the original position.**

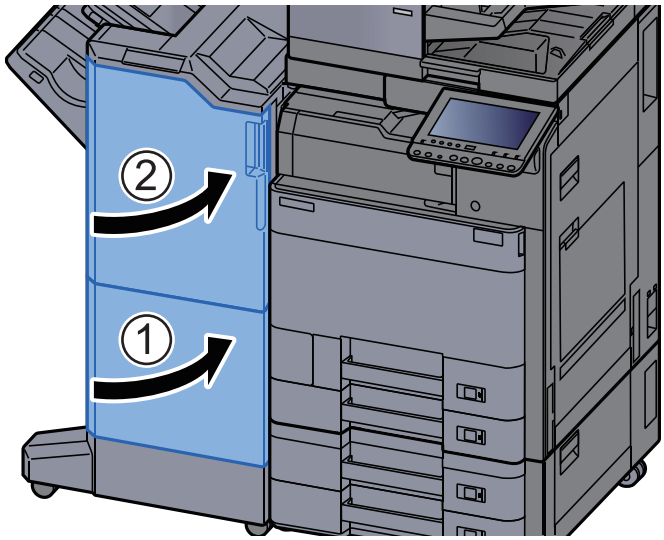

10 **Lift the folding tray.**

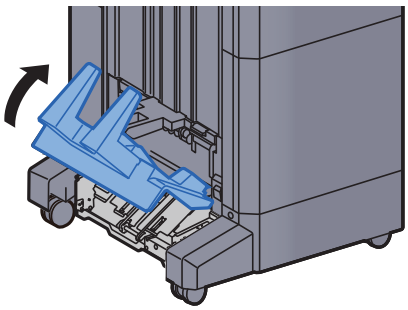

11 **Remove any jammed paper.**

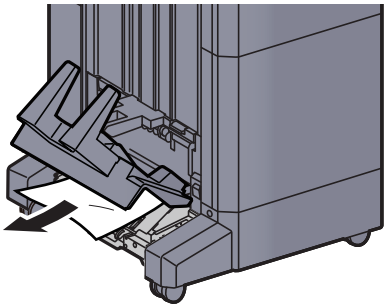

12 **Press the release lever to pull the folding unit out.**

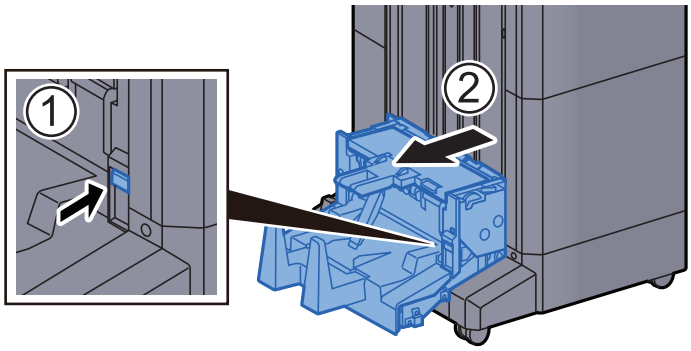

13 **Open the folding unit left cover.**

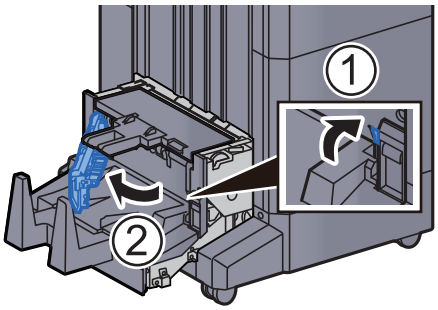

14 **Turn dial (D9).**

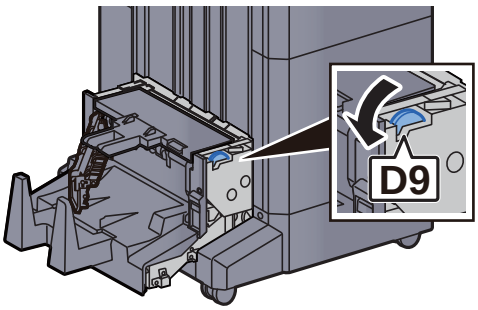

15 **Remove any jammed paper.**

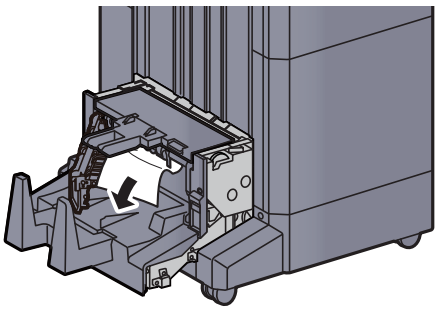

16 **Return the folding unit left cover to the original position.**

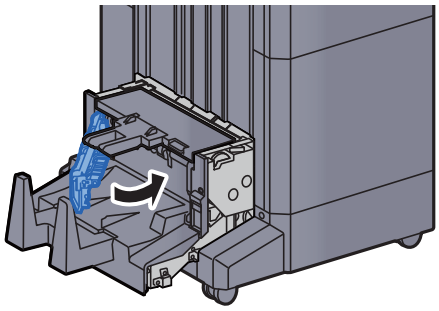

17 **Open the folding unit top cover.**

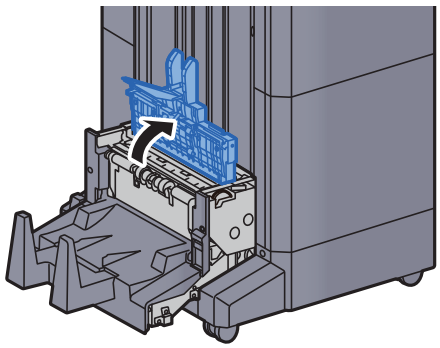

18 **Turn dial (D9).**

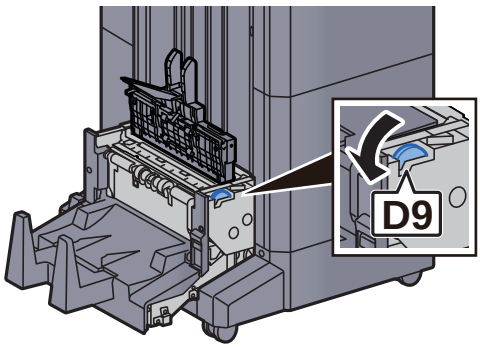

19 **Remove any jammed paper.**

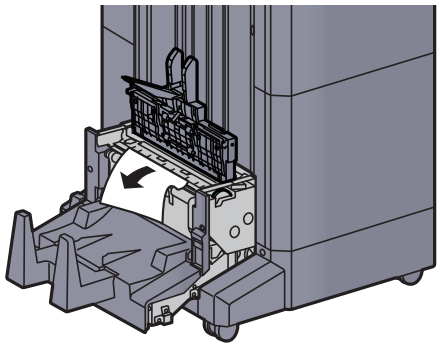

20 **Return the folding unit top cover to the original position.**

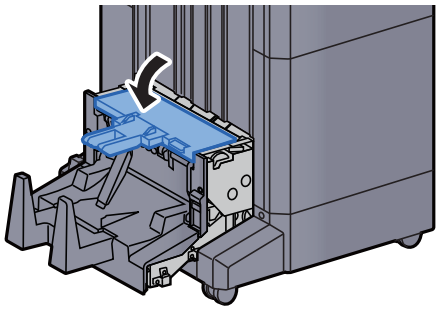

21 **Return the folding unit to the original position.**

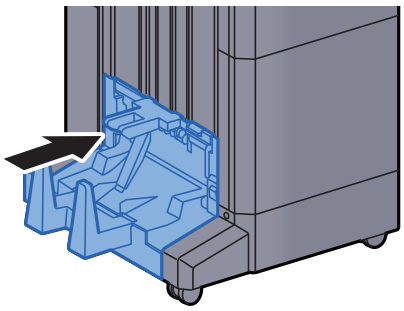

Remove any jammed paper in the Folding Tray

CAUTION

- **Do not reuse jammed papers.**
- **If the paper tears during removal, be sure to remove any loose scraps of paper from inside the machine. Scraps of paper left in the machine could cause subsequent jamming.**

1 **Lift the folding tray.**

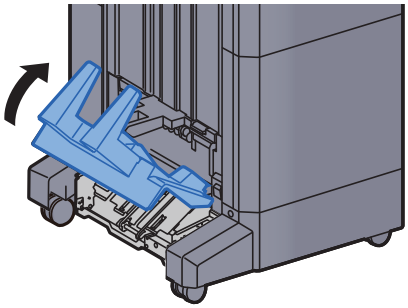

2 **Remove any jammed paper.**

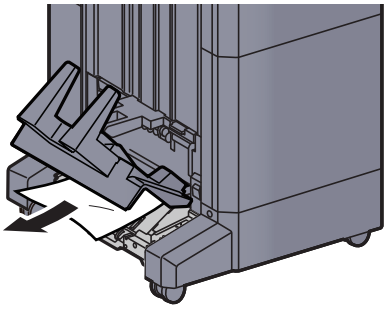

3 **Press the release lever to pull the folding unit out.**

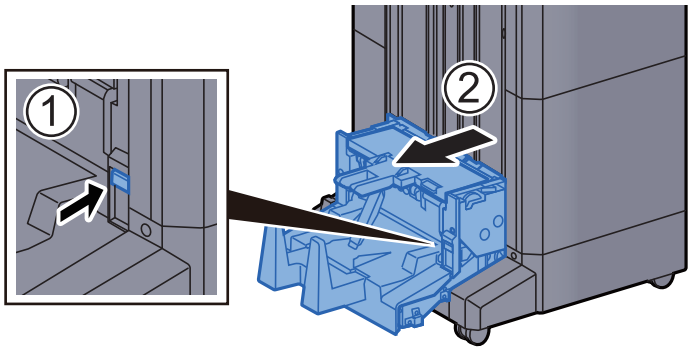

4 **Open the folding unit left cover.**

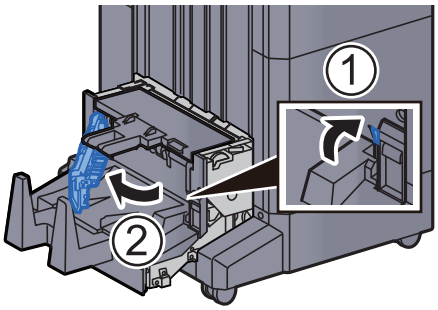

5 **Turn dial (D9).**

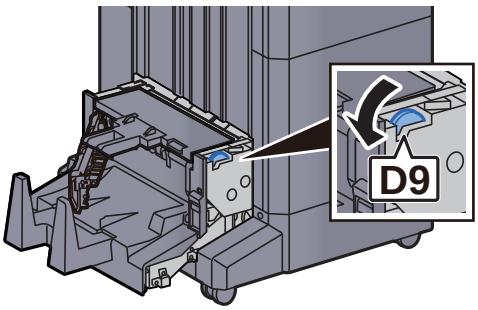

6 **Remove any jammed paper.**

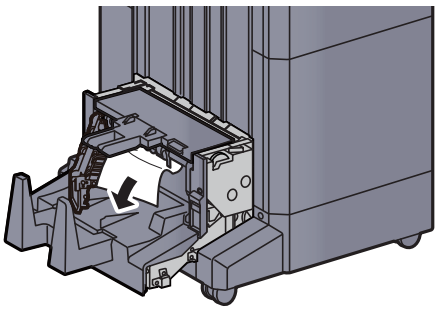

7 **Return the folding unit left cover to the original position.**

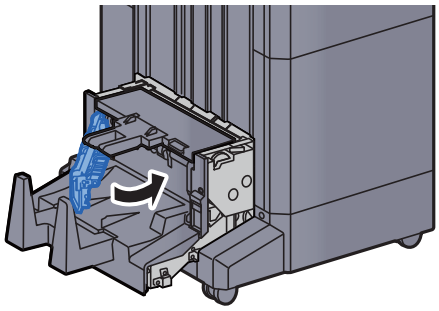

8 **Open the folding unit top cover.**

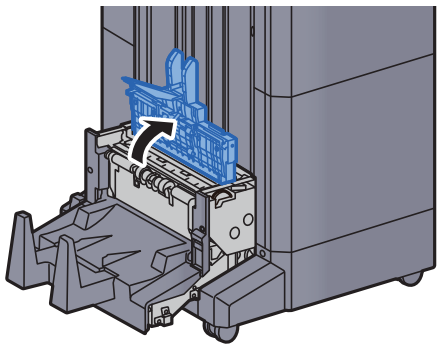

9 **Turn dial (D9).**

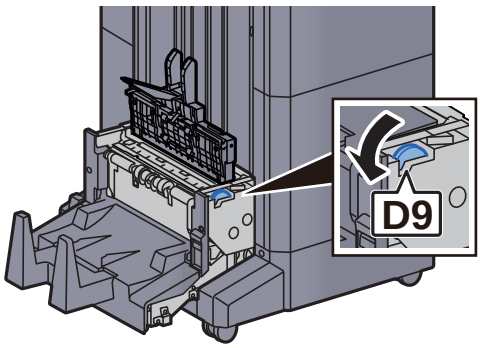

10 **Remove any jammed paper.**

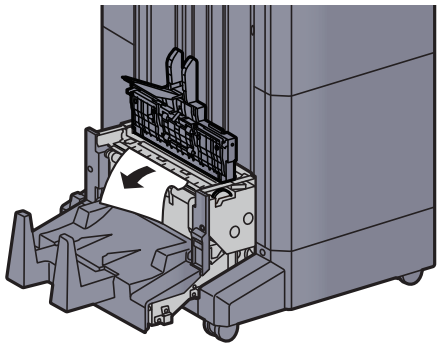

11 **Return the folding unit top cover to the original position.**

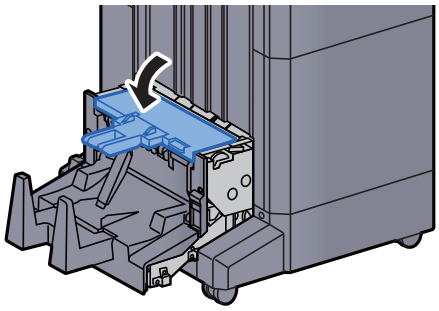

12 **Return the folding unit to the original position.**

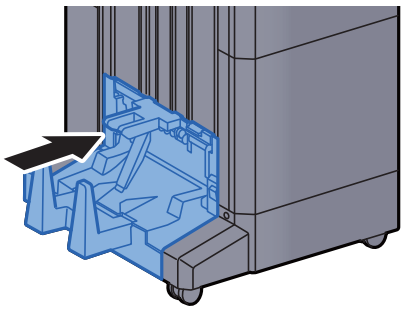

13 **Open the finisher front cover 1 and 2.**

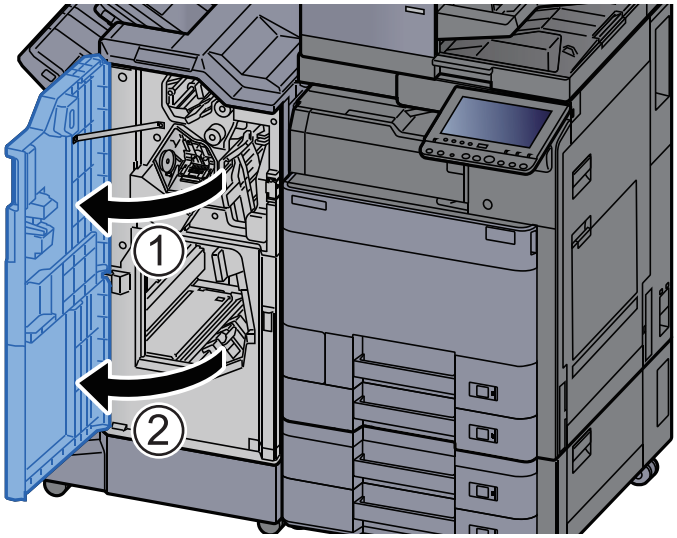

14 **Remove paper from inside the finisher.**

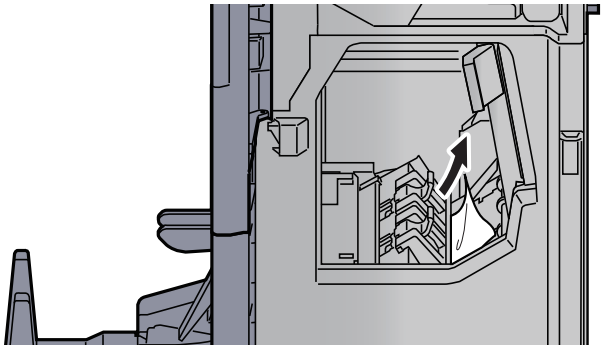

15 **Return the covers to the original position.**

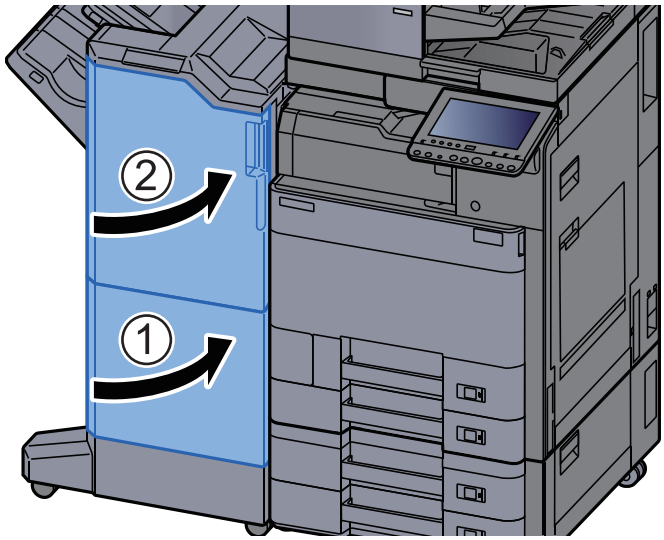

Clearing a Staple Jam

Clearing a Staple Jam of the Inner Finisher

1 **Open the inner finisher unit.**

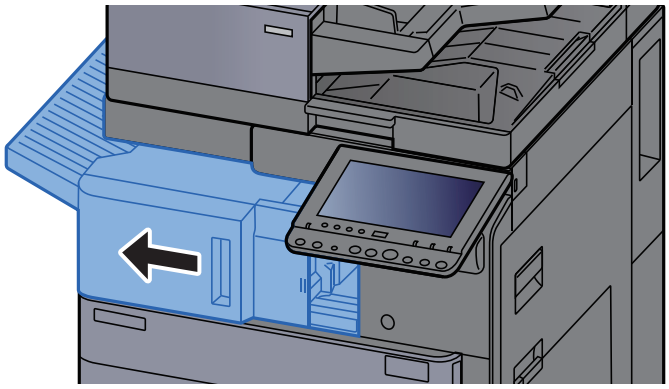

2 **Remove any jammed paper.**

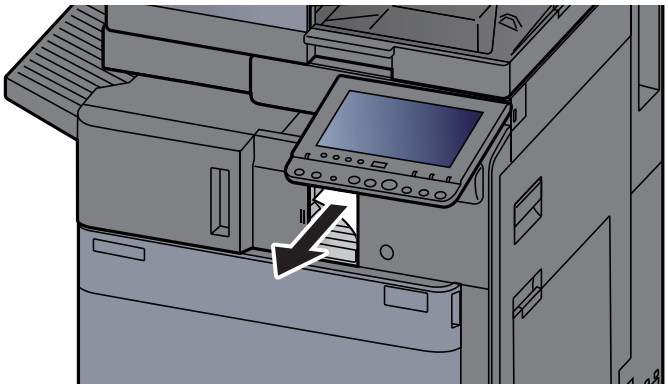

3 **Open the staple cover.**

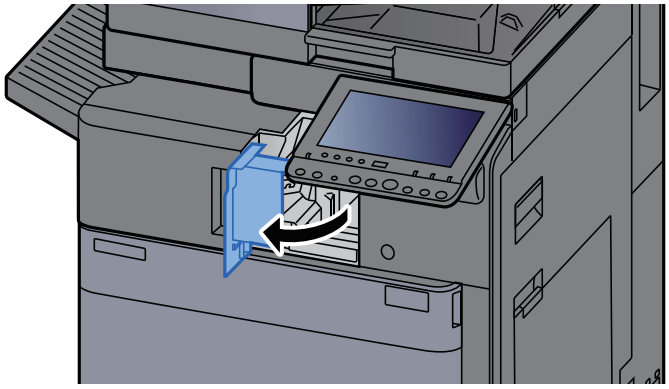

4 **Remove the Staple Cartridge Holder.**

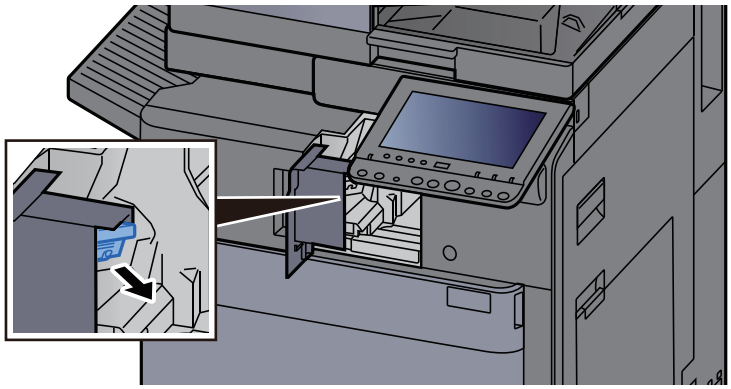

5 **Remove the jammed staple.**

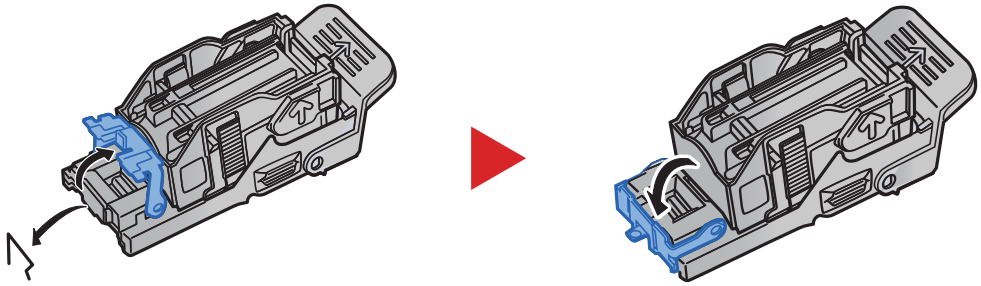

6 **Install the Staple Cartridge Holder.**

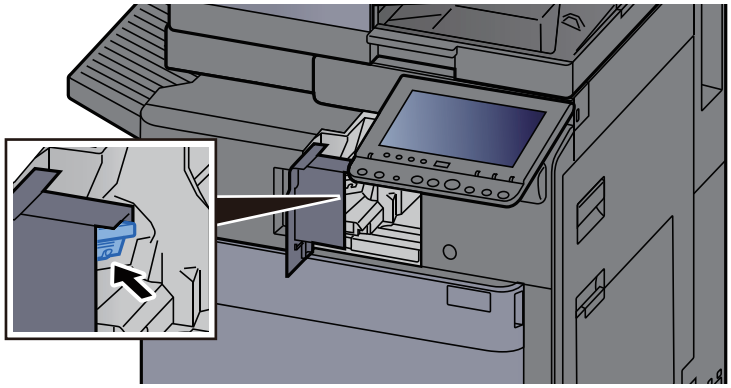

7 **Return the staple cover to the original position.**

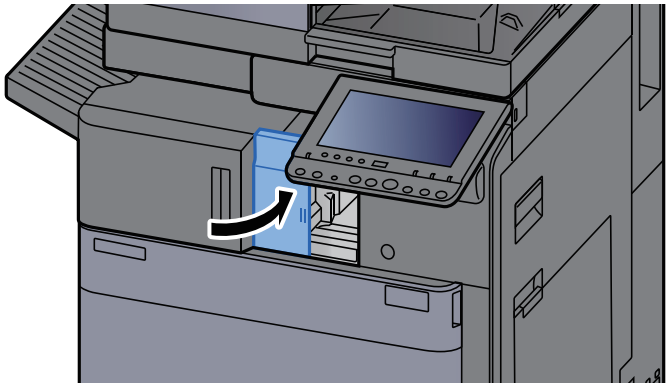

8 **Return the unit to the original position.**

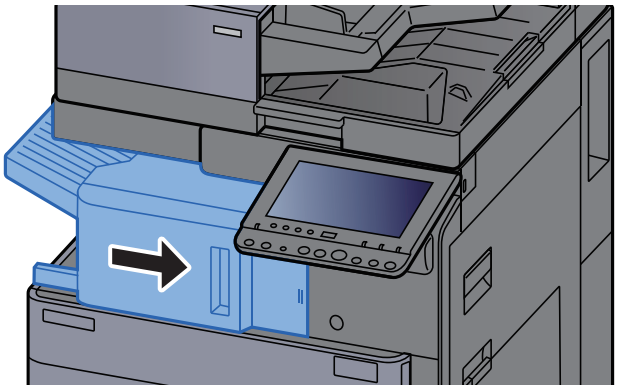

Clearing a Staple Jam of the 1,000-Sheet Finisher

1 **Open the finisher top cover.**

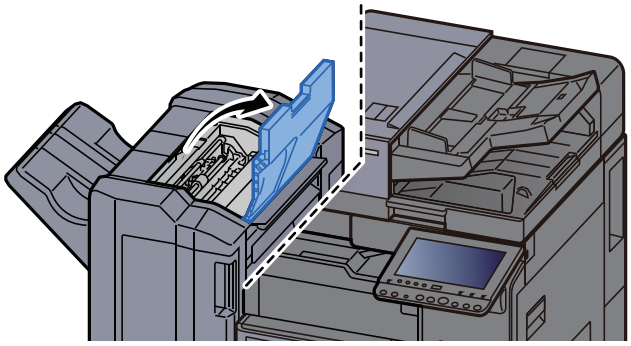

2 **Open the conveyor guide (D2).**

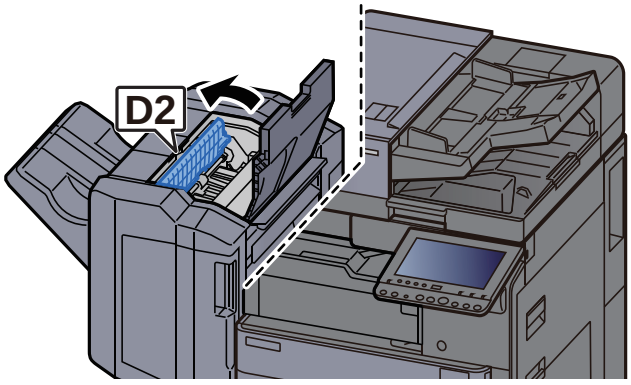

3 **Remove any jammed paper.**

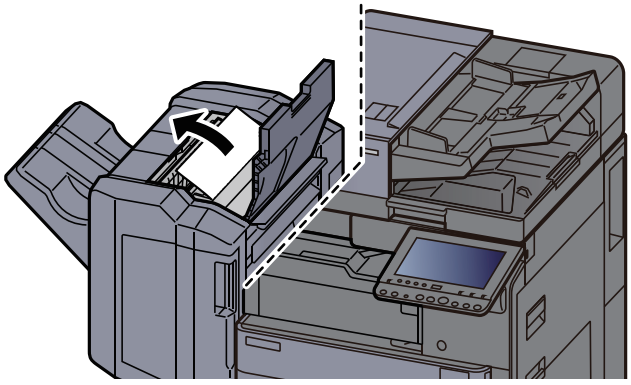

4 **Return the conveyor guide (D2) to the original position.**

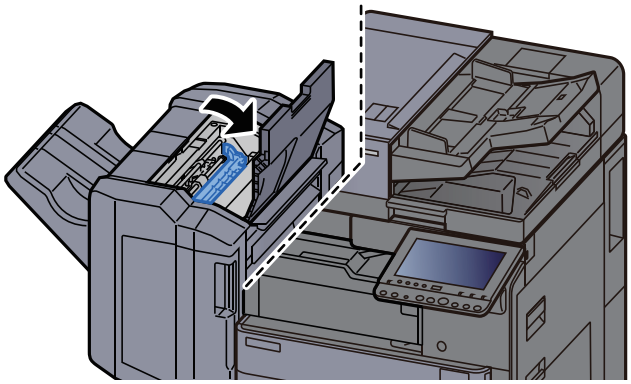

5 **Open the finisher front cover.**

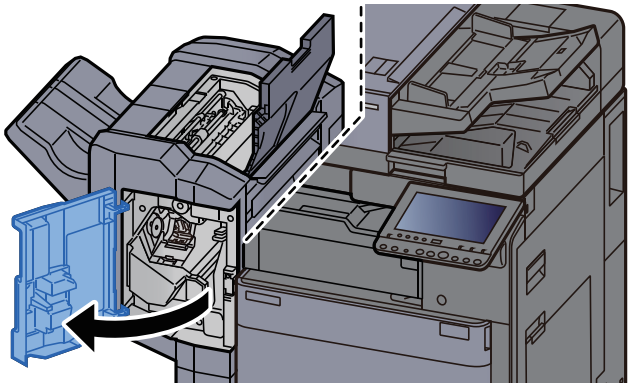

6 **Open the conveyor guide (D1).**

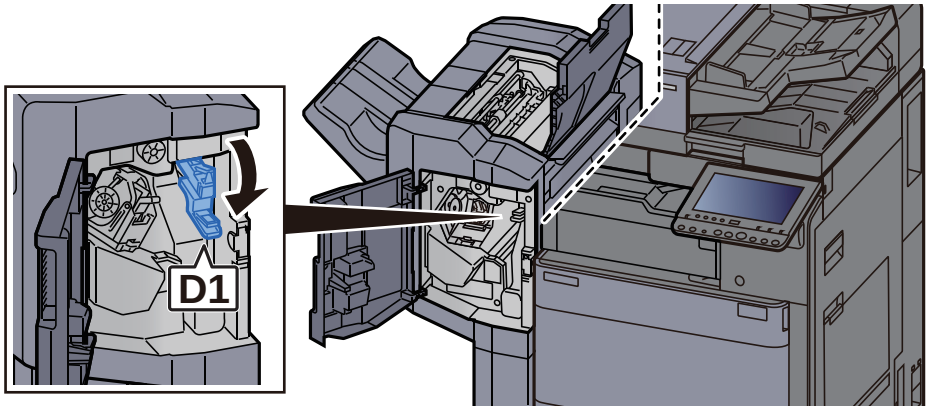

7 **Remove any jammed paper.**

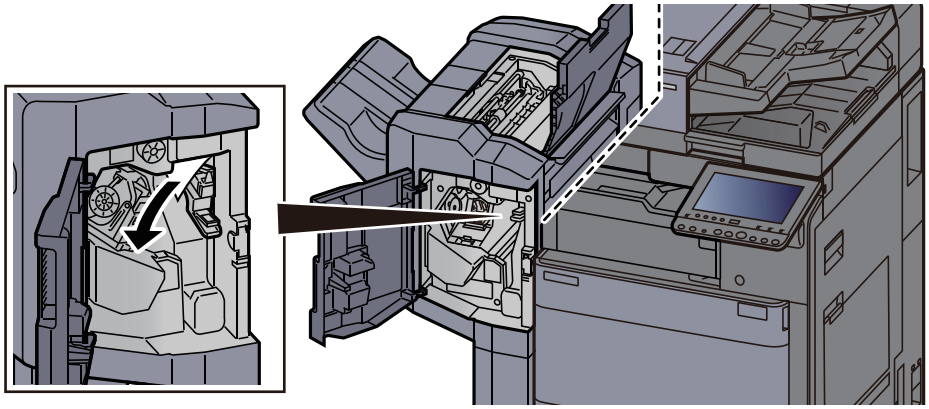

8 **Return the conveyor guide (D1) to the original position.**

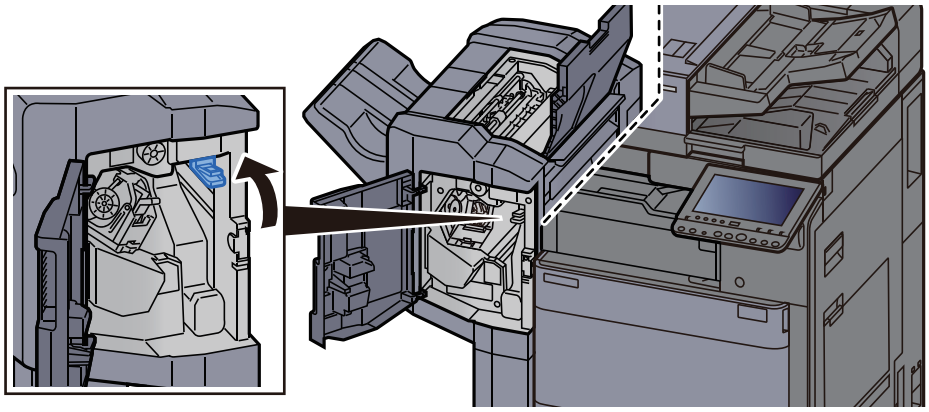

9 **Remove the Staple Cartridge Holder.**

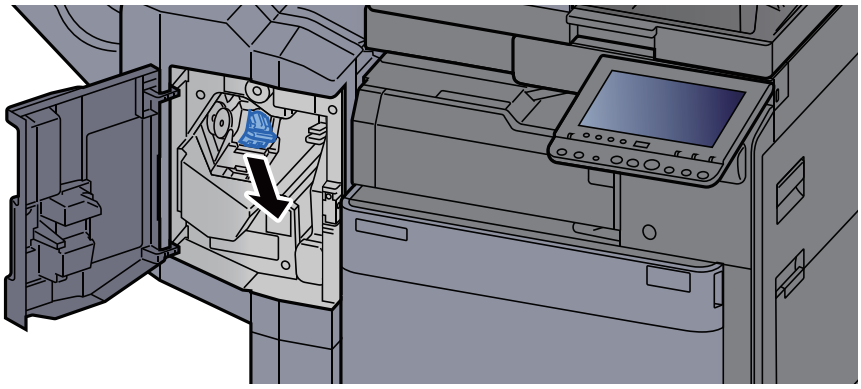

10 **Remove the jammed staple.**

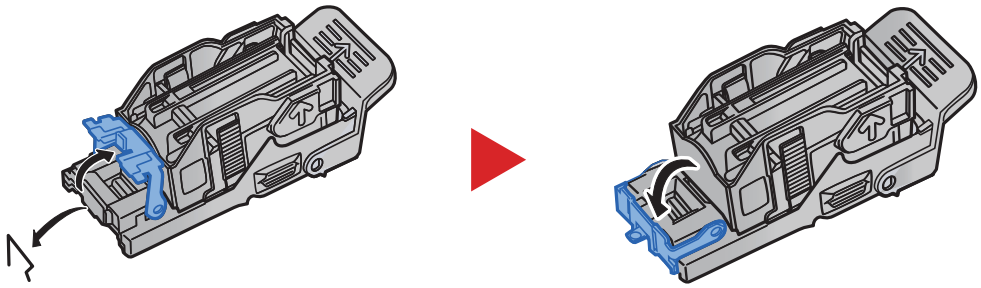

11 **Install the Staple Cartridge Holder.**



12 **Return the covers to the original position.**

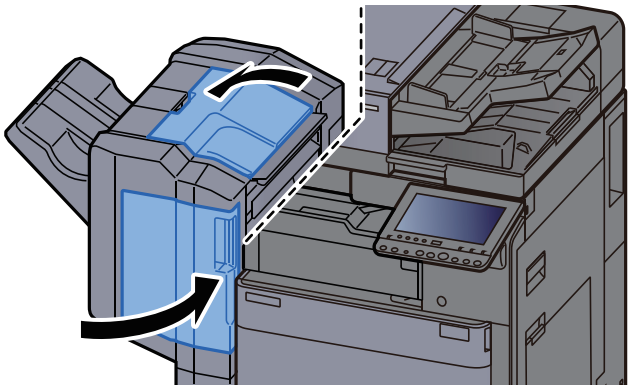

Clearing a Staple Jam of the 4,000-Sheet Finisher

1 **Open the finisher front cover 1.**

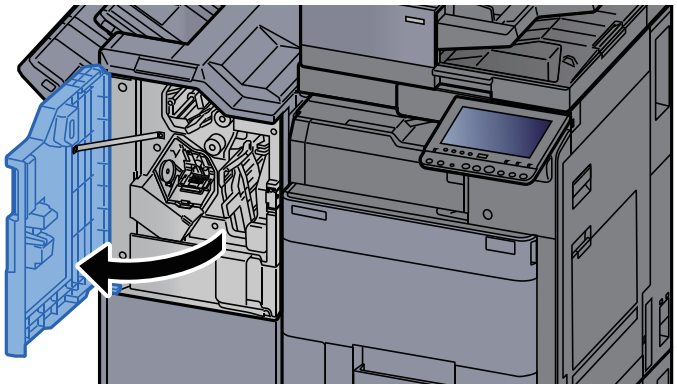

2 **Open the conveyor guide (D4).**

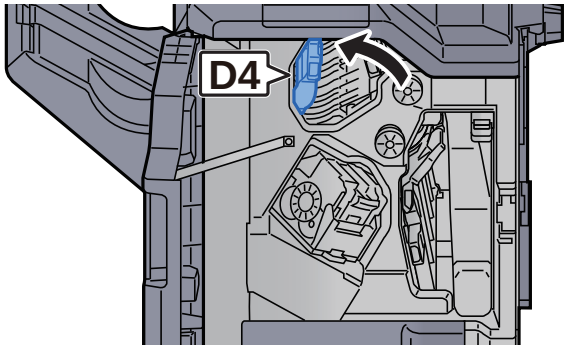

3 **Turn knob (D5).**

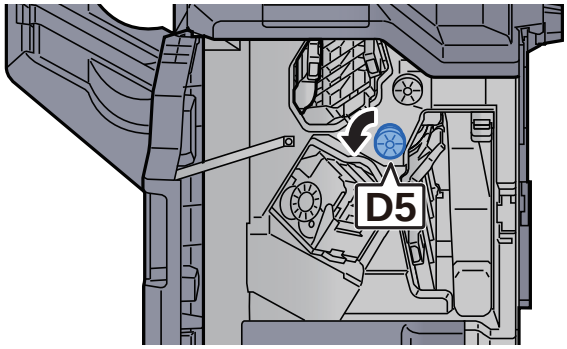

4 **Remove any jammed paper.**

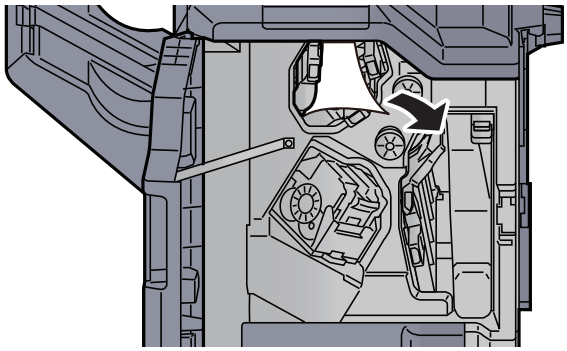

5 **Return the conveyor guide (D4) to the original position.**

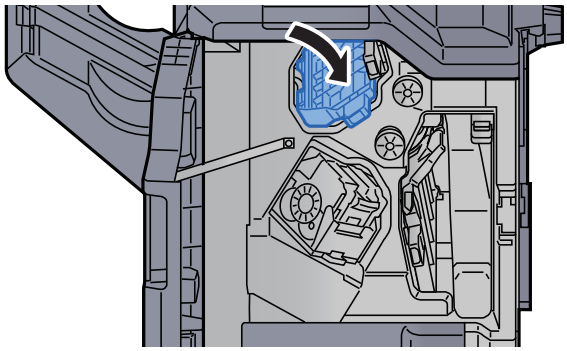

6 **Remove the Staple Cartridge Holder (A).**

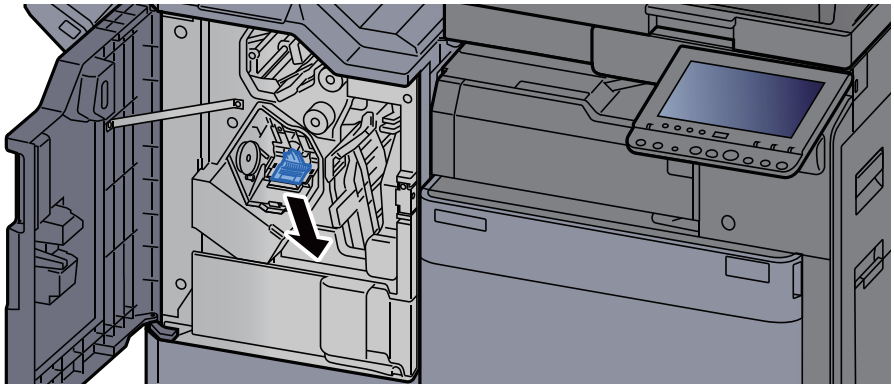

7 **Remove the jammed staple.**

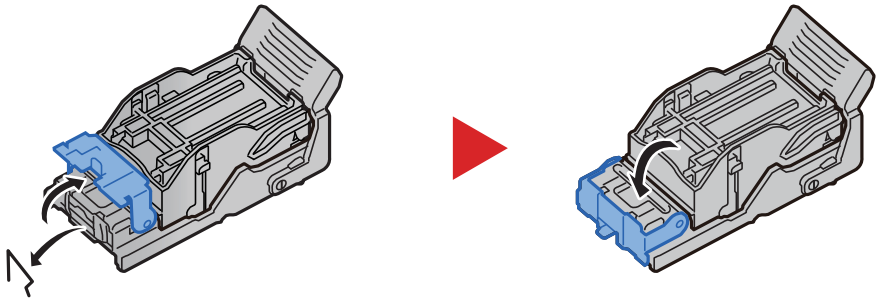

8 **Install the Staple Cartridge Holder (A).**

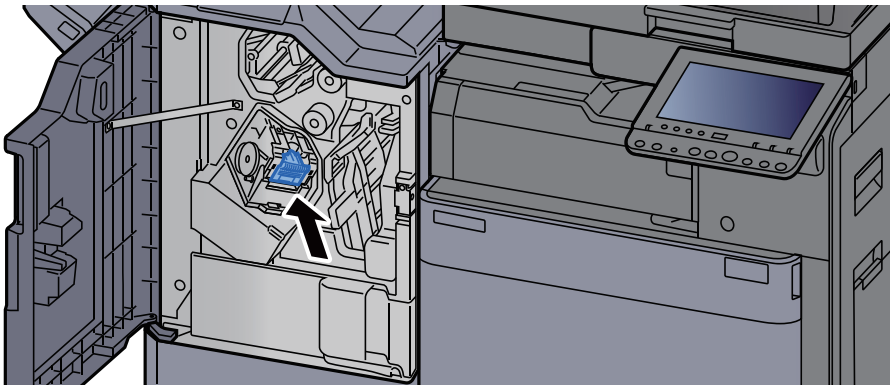

9 **Return the cover to the original position.**

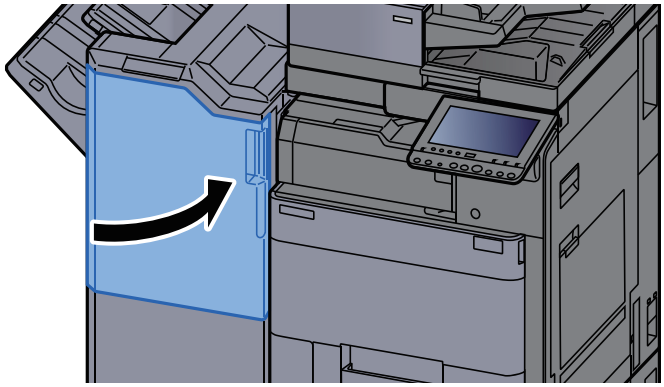

Clearing a Staple Jam of the Folding Unit

1 **Open the finisher front cover 1 and 2.**

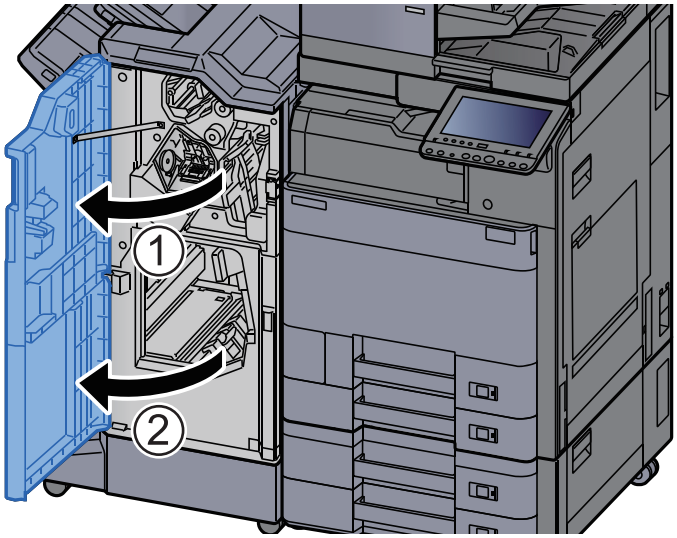

2 **Remove paper from inside the finisher.**

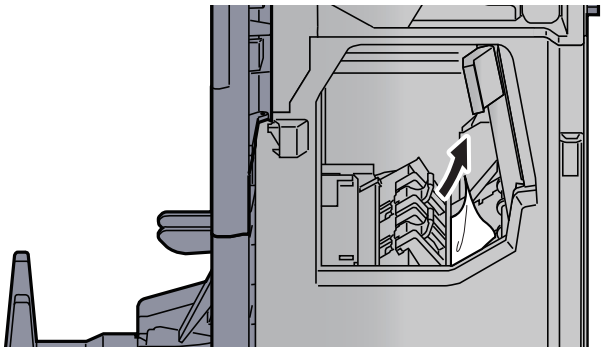

3 **Remove the Staple Cartridge Holder (B) or (C).**

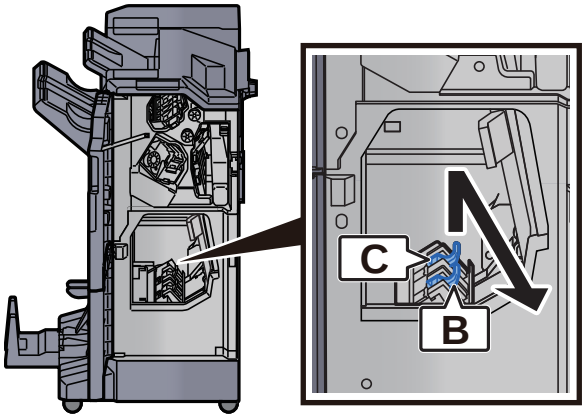

4 **Remove the jammed staple.**

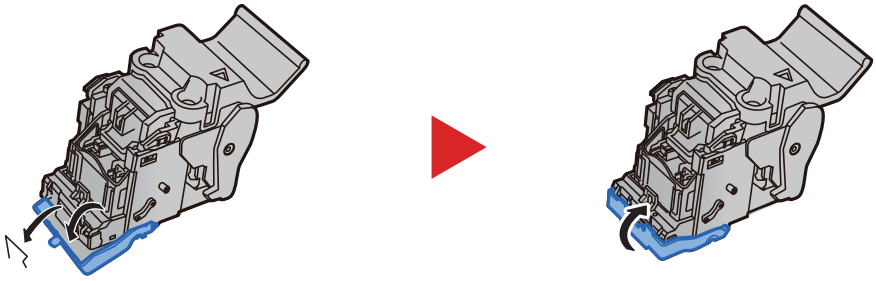

5 **Install the Staple Cartridge Holder (B) or (C).**

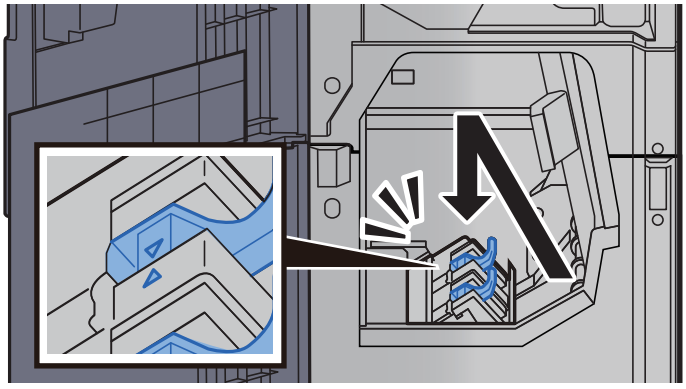

6 **Return the covers to the original position.**

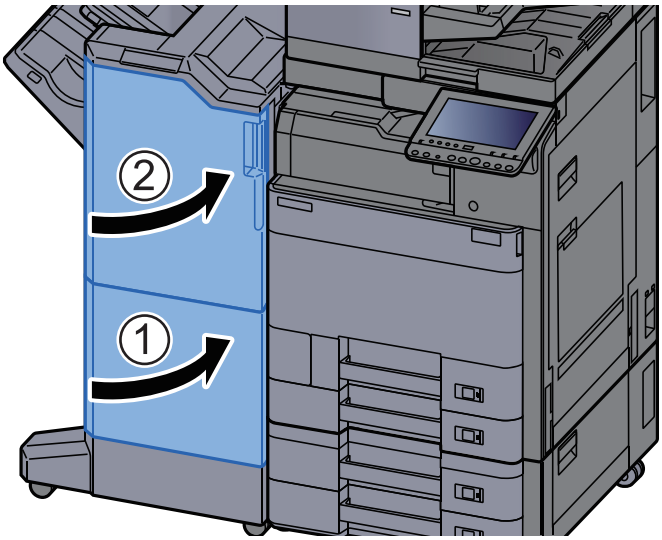

7 **Lift the folding tray.**

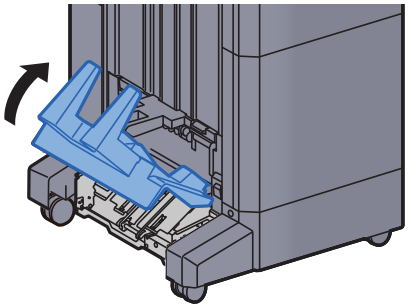

8 **Remove any jammed paper.**

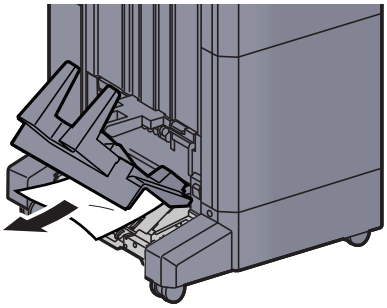

9 **Press the release lever to pull the folding unit out.**

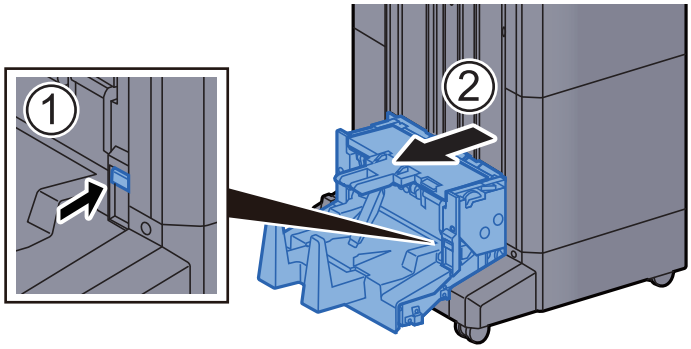

10 **Open the folding unit left cover.**

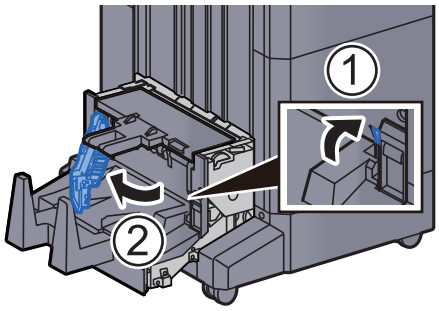

11 **Turn dial (D9).**

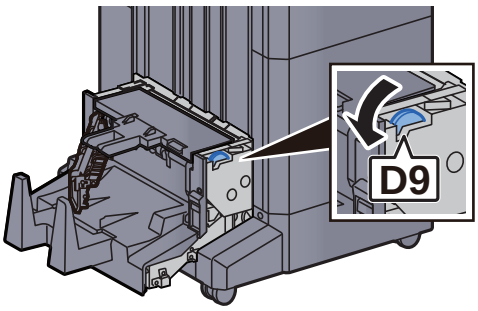

12 **Remove any jammed paper.**

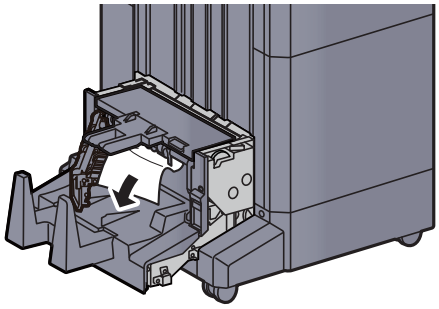

13 **Return the folding unit left cover to the original position.**

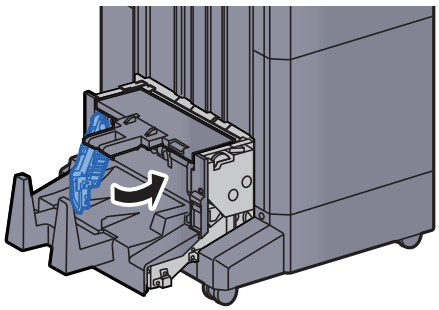

14 **Open the folding unit top cover.**

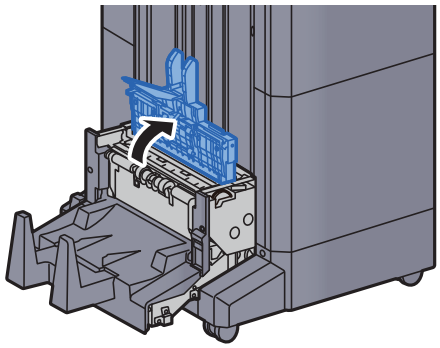

15 **Turn dial (D9).**

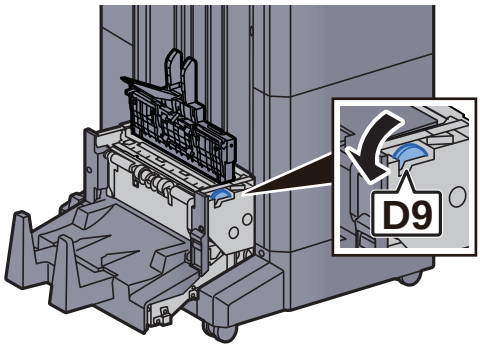

16 **Remove any jammed paper.**

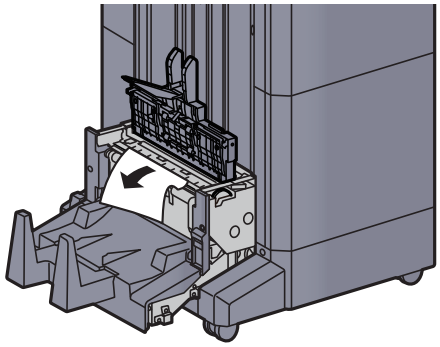

17 **Return the folding unit top cover to the original position.**

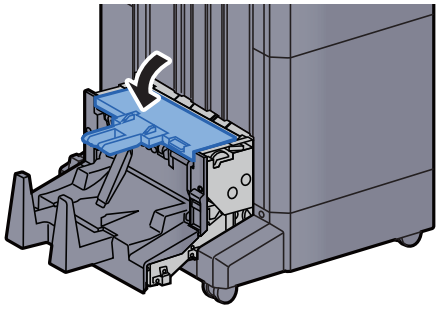

18 Return the folding unit to the original position.

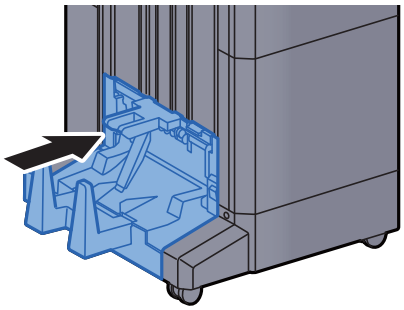

11 Appendix

This chapter explains the following topics:

Optional Equipment 11-2
Overview of Optional Equipment 11-2
Optional Applications 11-8
Starting Application Use 11-8
Checking Details of Application 11-9
Character Entry Method 11-10
Entry Screens 11-10
Entering Characters 11-12
Paper 11-13
Basic Paper Specifications 11-13
Choosing the Appropriate Paper 11-14
Special Paper 11-16
Specifications 11-20
Machine 11-20
Copy Functions 11-23
Printer Functions 11-25
Scanner Functions 11-26
Document Processor 11-26
Paper Feeder (500-sheet×2) 11-27
Large Capacity Feeder (1,500-sheet×2) 11-27
Side Feeder (3,000-sheet) 11-28
Inner Finisher 11-28
Punch Unit (For Inner Finisher) 11-28
1,000-Sheet Finisher 11-29
4,000-Sheet Finisher 11-29
Punch Unit (For 1,000-Sheet/4,000-Sheet Finisher) 11-30
Mailbox 11-30
Folding Unit 11-31
Job Separator Tray 11-31
Banner Tray 11-32
Glossary 11-33

Optional Equipment

Overview of Optional Equipment

The following optional equipment is available for the machine.

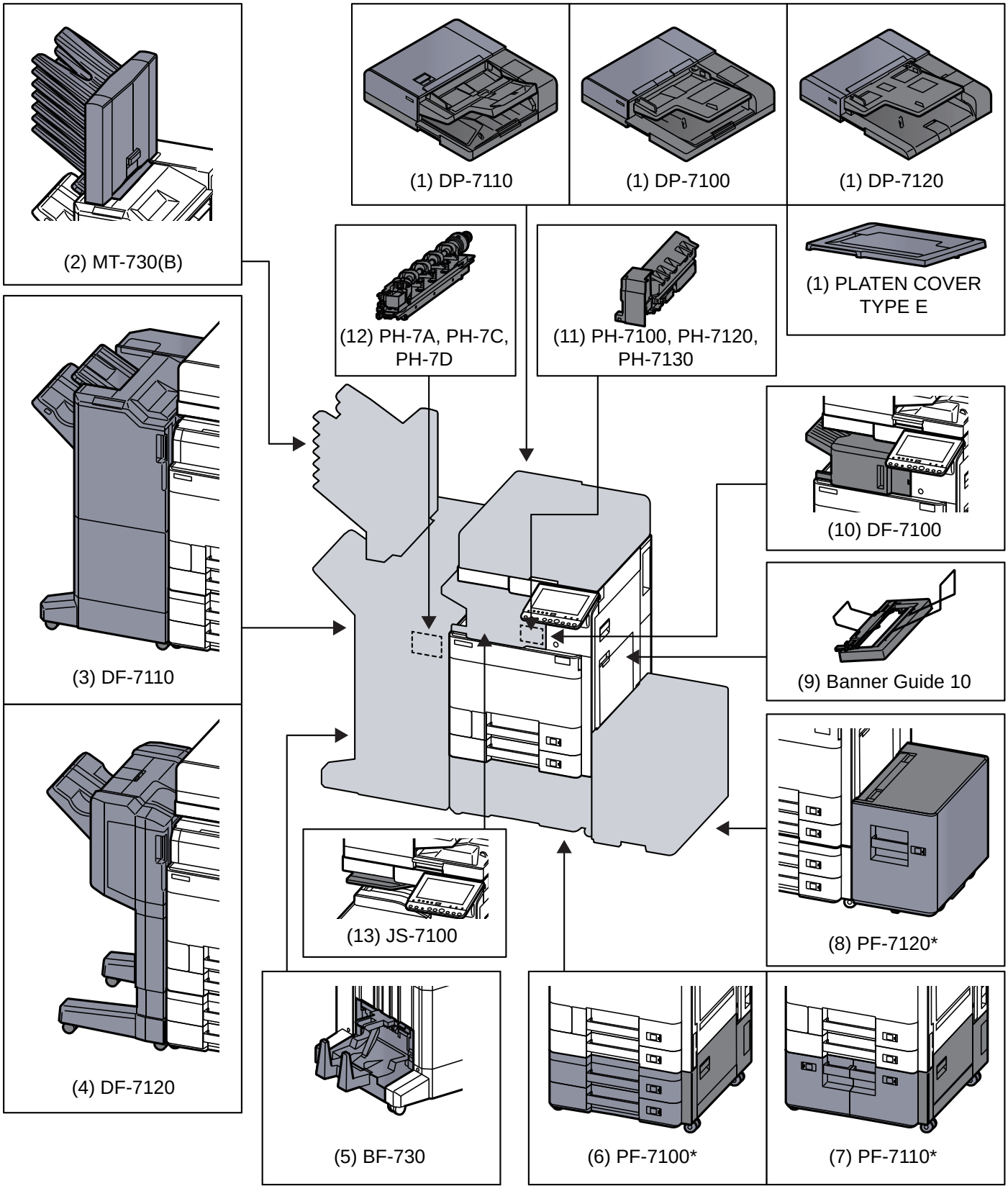

* If the following option is installed, toppling prevention kit must be installed: PF-7100, PF-7110, PF-7120

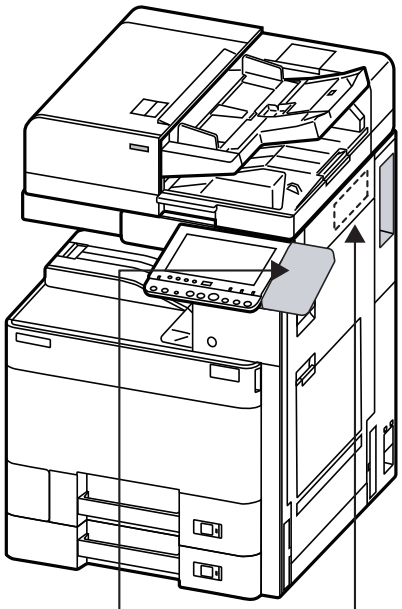

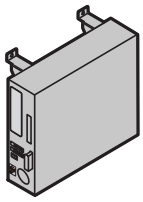

(17) Printing System 15

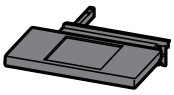

(18) Keyboard Holder 10

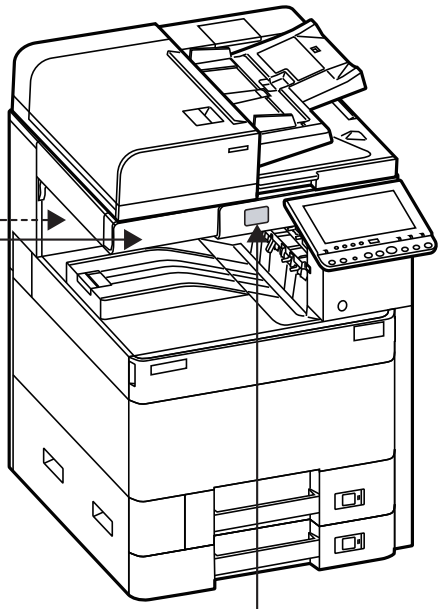

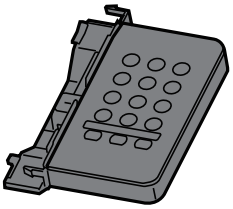

(14) NK-7100, NK-7110

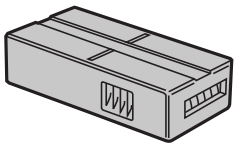

(15) Key Counter

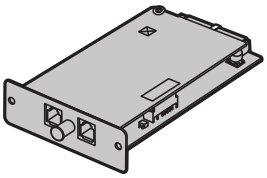

(19) FAX System 12

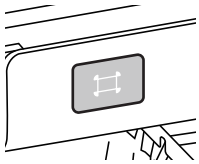

(22) Card Authentication Kit(B)

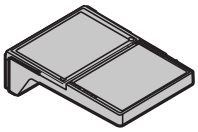

(16) DT-730(B)

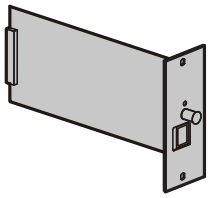

(20) IB-50

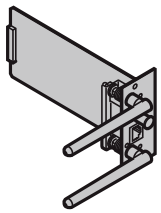

(21) IB-51

Software option
(23) Internet FAX Kit(A)
(24) Data Security Kit(E)
(25) UG-33
(26) UG-34
(27) Scan Extension Kit(A)

(28) USB Keyboard

(1) DP-7110 "Document Processor (Dual Scan)"
DP-7100 "Document Processor (Reverse Automatic)"
DP-7120 "Document Processor (Reverse Automatic)" (Option for 2552ci/3252ci)
PLATEN COVER TYPE E "Original Cover"

Automatically scans originals. Also you can perform duplex copying and split copying.

For document processor operation, refer to the following:

Loading Originals in the Document Processor (page 5-4)

When the document processor is not used, please use the PLATEN COVER TYPE E.

(2) MT-730 (B) "Mailbox"

Makes it easy to sort output into separate trays. Installing this option adds 7 output trays. When multiple computer users share the printer, each user can print to a specified tray. Installs on the 4,000-Sheet Finisher.

NOTE

To deliver output to the mail box, change the Paper Output selection on the operation panel or in the printer driver, or change in the default settings.

Paper Output (page 6-30)

(3) DF-7110 "4,000-Sheet Finisher"

This is a large-capacity 4,000-Sheet Finisher capable of holding large print runs and of separating and offsetting multiple copies of a printout into individual copies. It can also staple or hole-punch (optional) the offset printouts.

(4) DF-7120 "1,000-Sheet Finisher"

This is a document finisher capable of holding large print runs and of separating and offsetting multiple copies of a printout into individual copies. It can also staple or hole-punch (optional) the offset printouts.

(5) BF-730 "Folding Unit"

Folds printed output at the center or in tri-fold to enable the creation of simple booklets. Installs on the 4,000-Sheet Finisher.

(6) PF-7100 "Paper Feeder (500-sheet×2)"

Two additional cassettes identical to the machine’s cassette can be installed in the machine. Paper capacity and loading method are the same as the standard cassettes.

Loading in Cassette 1 (page 3-4)

(7) PF-7110 "Large Capacity Feeder (1,500-sheet×2)"

In addition to the machine’s cassettes, you can also install an optional large capacity feeder (1,500-sheet×2) capable of holding up to 3,000 sheets of A4, B5 or Letter paper.

Loading in the Large Capacity Feeder (page 3-14)

(8) PF-7120 "Side Feeder (3,000-sheet)"

In addition to the machine’s cassettes, you can also install an optional side feeder (3,000-sheet) capable of holding up to 3,000 sheets of A4, B5 or Letter paper.

Loading in the Side Feeder (page 3-16)

(9) Banner Guide 10 "Banner Tray"

This tray enables continuous feeding of banner paper. Up to 10 sheets of banner paper can be loaded. To attach the tray and load paper, refer to the following:

Using the Banner Tray (Option) (page 4-12)

(10) DF-7100 "Inner Finisher"

This is a document finisher capable of holding large print runs and of separating and offsetting multiple copies of a printout into individual copies. It can also staple the offset printouts.

(11) PH-7100, PH-7120, PH-7130 "Punch Unit"

Attaches to the Inner Finisher and is used to punch holes.

(12) PH-7A, PH-7C, PH-7D "Punch Unit"

Attaches to the Document Finisher and is used to punch holes.

(13) JS-7100 "Job Separator"

Separate paper according to output tray for easier sorting. Specify as the output tray for copy or print jobs. Or, specify as the default output tray for printing from the copy or Document Box screen, printing from the PC, and printing of the received fax data. JS-7100 is standard on 2552ci.

NOTE

To ensure that paper is delivered to the Job Separator, select the output destination or change the default setting.

Paper Output (page 6-30)

(14) NK-7100, NK-7110 "Optional Numeric Keypad"

The numeric keypad is added to the operation panel. If the optional numeric keypad is installed, numeric keys do not appear on the touch panel.

(15) Key Counter "Key Counter"

Use the key counter to monitor machine usage. The key counter offers a convenient solution for centralized management of copy volume for different departments in a large company.

Inserting the Key Counter

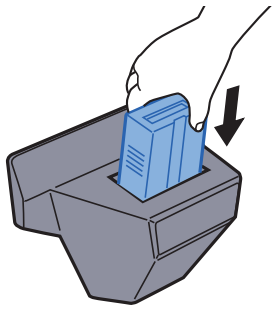

(16) DT-730 (B) "Document Table"

Place original or other documents when using the machine.

(17) Printing System 15 "Fiery Controller" (Option for 3252ci/4052ci/5052ci/6052ci)

When the Fiery Controller is installed, the regular print function of a machine can be replaced with the print function of the Fiery Controller. The Fiery Controller print functions enable a variety of printing features that are not possible on a regular machine, such as advanced color management that reproduces the true color of the image by reading each machine's color display method and characteristics at the time of printing.

(18) Keyboard Holder 10 "Keyboard Holder"

A USB keyboard connected to the machine can be placed here.

(19) FAX System 12 "FAX Kit"

By installing the FAX kit, fax send/receive is enabled. Also, it is possible to use it as a network fax, by using it with a computer. When two FAX kits are installed, the units can be connected to two different telephone lines which will enable quicker message transmission to a number of recipients. If one of the lines is dedicated to receiving, the busy line time can be reduced.

FAX Operation Guide

(20) IB-50 "Network Interface Kit"

The Network Interface Kit provides a high-speed connection for the Gigabit-per-second interface. This kit supports traditional protocols such as AppleTalk, Netware and so on.

It also supports only the least functions in the standard utilities.

IB-50 User's Manual

(21) IB-51 "Wireless Network Interface Kit"

This is a wireless LAN interface card which supports the wireless LAN specifications IEEE802.11n (Max 300 Mbps) and 11 g/b. This supports traditional protocols such as AppleTalk, Netware and so on.

It also supports only the least functions in the standard utilities.

The IB-51 Steup utility supports Windows OS and Mac OS X.

IB-51 User's Manual

(22) Card Authentication Kit(B) "Card Authentication Kit"

User login administration can be performed using ID cards. To do so, it is necessary to register ID card information on the previously registered local user list. For more information about how to register this information, refer to the following:

Card Authentication Kit(B) Operation Guide

(23) Internet FAX Kit(A) "Internet FAX Kit"

Activating the Internet FAX Kit sends and receives faxes via the Internet without using a phone line. It can only be added when the FAX Kit is installed.

(24) Data Security Kit(E) "Data Security Kit"

The Data Security Kit overwrites all unnecessary data in the storage area of the hard disk so that it cannot be retrieved. The Data Security Kit encrypts data before storing it in the hard disk. It guarantees higher security because no data cannot be decoded by ordinary output or operations.

(25) UG-33 "ThinPrint Option"

This application allows print data to be printed directly without a print driver.

(26) UG-34 "Emulation Upgrade Kit"

Enables emulation whereby the machine operates using commands for other printers. Installing this option enables IBM Proprinter, Line Printer, and EPSON LQ-850 emulation.

(27) Scan Extension Kit(A) "OCR Scan Activation Kit"

This option enables the use of the OCR Text Recognition function in the applications of the machine.

(28) USB Keyboard "USB Keyboard"

A USB keyboard can be used to enter information into the text fields on the operation panel. A special mount is also available to install the keyboard on the machine. Please contact your dealer or service representative for information on keyboards that are compatible with your machine before you purchase one.

Optional Applications

Overview of the Applications

The applications listed below are installed on this machine.

Application
Data Security Kit
Internet FAX Kit
Card Authentication Kit
ThinPrint Option*1
Emulation Upgrade Kit
OCR Scan Activation Kit*1

*1 This can be used on a trial basis for a limited time.

NOTE

- Restrictions such as the number of times the application can be used during the trial period differ depending on the application.
- If you change the date/time while using the trial version of an application, you will no longer be able to use the application.

Starting Application Use

1 [**System Menu/Counter**] key > [**System/Network**] > "Optional Function" [**Next**]

NOTE

If the user authentication screen appears, enter your login user name and login password and select [**Login**]. For this, you need to login with administrator privileges. The factory default login user name and login password are set as shown below.

Model Name	Login User Name	Login Password
2552ci	2500	2500
3252ci	3200	3200
3552ci	3500	3500
4052ci	4000	4000
5052ci	5000	5000
6052ci	6000	6000

2 Select the desired application > [**Activate**]

You can view detailed information on the selected application by selecting [**Detail**].

3 Select [**Official**] in the license key entry screen.

Some applications do not require you to enter a license key. If the license key entry screen does not appear, go to Step 5.

To use the application as a trial, select [**Trial**] without entering the license key.

4 Select [**Yes**] in the confirmation screen.

NOTE

Icons of activated application are displayed in the Home screen.

Checking Details of Application

1 [**System Menu/Counter**] key > [**System/NetWork**] > "Optional Function" [**Next**]

NOTE

If the user authentication screen appears, enter your login user name and login password and select [**Login**]. For this, you need to login with administrator privileges. The factory default login user name and login password are set as shown below.

Model Name	Login User Name	Login Password
2552ci	2500	2500
3252ci	3200	3200
3552ci	3500	3500
4052ci	4000	4000
5052ci	5000	5000
6052ci	6000	6000

2 Select the desired application and select [**Detail**].

You can view detailed information on the selected application.

The table below lists the item you can view.

Item
Function Name
License
Remaining Counts
Expiration Date
Status

Extend the trial period.

[**Extend**] > [**Yes**]

The trial period is extended.

Character Entry Method

To enter characters for a name, use the on-display keyboard in the touch panel following the steps as explained below.

NOTE

Keyboard Layout
"QWERTY", "QWERTZ" and "AZERTY" are available as keyboard layouts the same as a PC keyboard. Select the [**System Menu/Counter**] key, [**Common Settings**] and then [**Keyboard Layout**] to choose the desired layout. "QWERTY" layout is used here as an example. You may use another layout following the same steps.

Entry Screens

Lower-case Letter Entry Screen

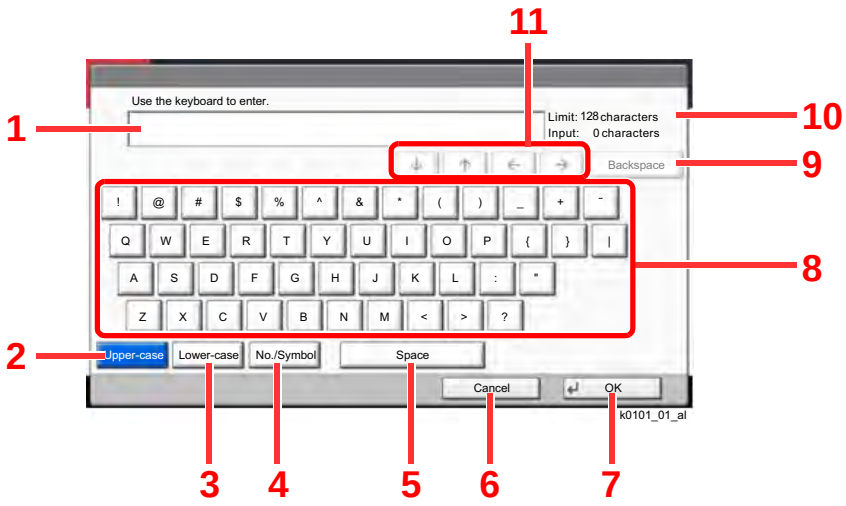

No.	Display/Key	Description
1	Display	Displays entered characters.
2	[**Upper-case**]	Select to use upper-case letters.
3	[**Lower-case**]	Select to use lower-case letters.
4	[**No./Symbol**]	Select to enter numbers and symbols.
5	[**Space**]	Select to insert a space.
6	[**Cancel**]	Select to cancel entered characters and return to the screen before the entry.
7	[**OK**]	Select to finalize entry and return to the screen before the entry.
8	Keyboard	Select a character to enter.
9	[**Backspace**]	Select to delete a character to the left of the cursor.
10	Limit Display	Displays maximum number of characters.
11	Cursor Key	Select to move the cursor on the display.

Upper-case Letter Entry Screen

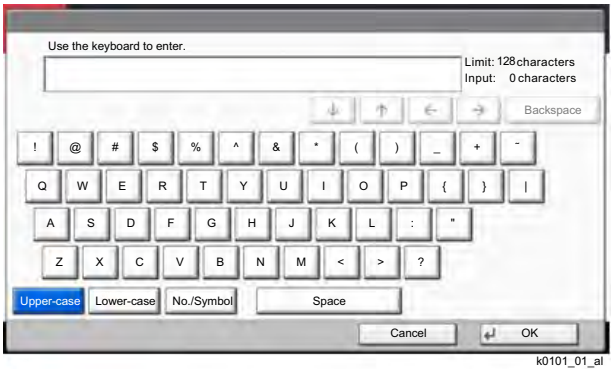

Number/Symbol Entry Screen

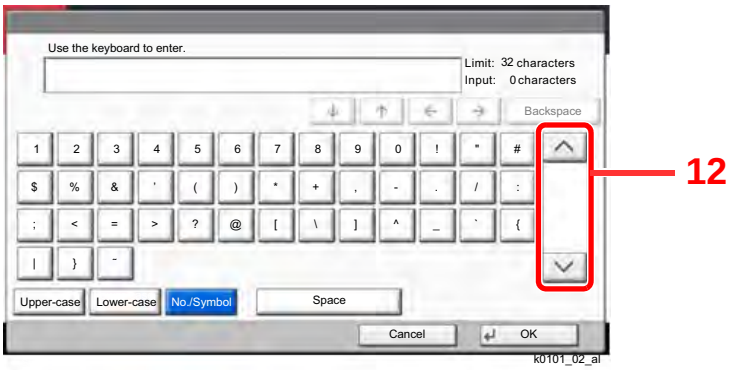

No.	Display/Key	Description
12	[∧]/[∨]	To enter a number or symbol not shown in the keyboard, select the cursor key and scroll the screen to view other numbers or symbols to enter.

Entering Characters

Follow the steps below to enter 'List A-1' for an example.

1 Select [**Upper-case**].

2 Select [**L**]. The letter "L" is shown on the display.

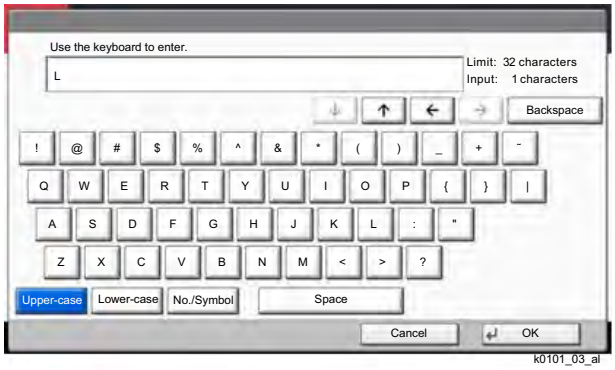

3 Select [**Lower-case**].

4 Select [**i**], [**s**], [**t**] and [**Space**].

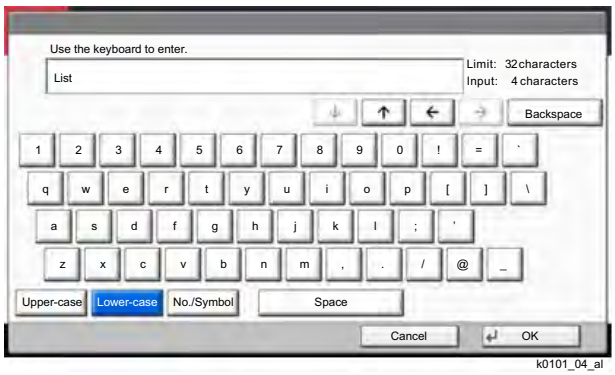

5 Select [**Upper-case**].

6 Select [**A**].

7 Select [**No./Symbol**].

8 Select [∧] or [∨] repeatedly to view the keyboard containing [**-**] and [**1**].

9 Select [**-**] and [**1**].

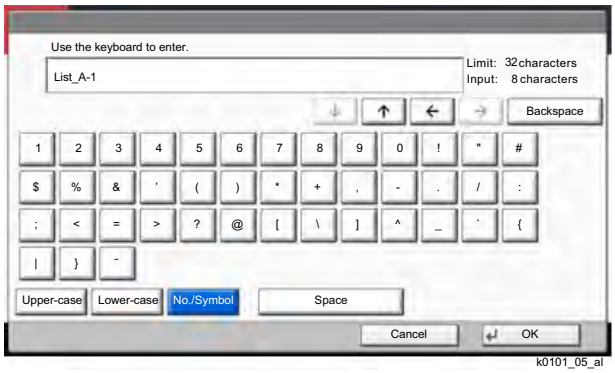

10 Check that the entry is correct. Press [**OK**].

Paper

This section explains the paper sizes and types that can be used in the paper source.

For details on the sizes, types, and number of sheets of paper that can be loaded in each paper tray, refer to the following:

Specifications (page 11-20)

Basic Paper Specifications

This machine is designed to print on standard copy paper as used in regular ('dry') copiers and page printers such as laser printers. It also supports a variety of other types of paper that conform to the specifications given in this appendix.

Be careful when choosing paper. Paper unsuitable for the machine may cause jams or may be wrinkled.

Supported Paper

Use standard copy paper for regular copiers or laser printers. The printing quality will be affected by the quality of paper. Poor quality paper may result in unsatisfactory output.

Basic Paper Specifications that can be Used with This Machine

The following table lists the specifications of paper that is supported with this machine. Refer to the subsequent sections for further details.

Criteria	Specifications
Weight	Cassettes: 52 to 300 g/m^2
	Multi purpose tray: 52 to 300 g/m^2
Dimensional accuracy	±0.7 mm
Squareness of corners	90° ±0.2°
Moisture content	4 to 6%
Pulp content	80% or more

NOTE

Some recycled paper does not meet requirements for use with this machine as listed in the Basic Paper Specifications shown below, such as moisture or pulp content. For this reason, we recommend purchasing a small amount of recycled paper as a sample for testing prior to use. Choose recycled paper that gives the best printing results and contains low levels of paper dust.

We are not responsible for the problems occurred from the use of paper that does not conform to our specifications.

Choosing the Appropriate Paper

This section describes guidelines for choosing paper.

Condition

Avoid using paper with bent corners or that is curled, dirty, or torn. Do not use paper that has a rough surface or paper fiber lint, or that is especially delicate. Use of paper in any of these conditions will not only deliver poor copies but may also cause jams and shorten the useful life of the machine. Choose paper with a smooth and even surface; however, avoid coated paper or paper with a treated surface as it may damage the drum or fusing unit.

Ingredients

Do not use paper such as paper that has been coated or surface-treated or paper that contains plastic or carbon. Those types of paper may produce harmful fumes from the heat of printing and may damage the drum.

Be sure to use the standard paper that contains at least 80% pulp, i.e., not more than 20% of the total paper content consists of cotton or other fibers.

Smoothness

The paper surface should be smooth, but it must be uncoated. With paper that is too smooth and slippery, several sheets may accidentally be supplied at once, causing jams.

Basis Weight

In countries that use the metric system, basis weight is the weight in grams of one sheet of paper one square meter in area. In the United States, basis weight is the weight in pounds of one ream (500 sheets) of paper cut to the standard size (or trade size) for a specific grade of paper. Paper that is too heavy or too light may be supplied incorrectly or cause paper jams, which may cause excessive wear of the machine. Mixed paper weight (i.e., thickness) may cause several sheets to be supplied at once accidentally and may also cause blurring or other printing problems if the toner fails to adhere correctly.

Moisture Content

Paper moisture content is the ratio of moisture to dryness expressed as a percentage. Moisture affects how the paper is supplied, the electrostatic chargeability of the paper, and how the toner adheres.

Paper moisture content varies depending on the relative humidity in the room. High relative humidity causes paper to become damp, making the edges expand so it appears wavy. Low relative humidity causes paper to lose moisture, making the edges tighten and weakening print contrast.

Wavy or tight edges may cause the paper to slip when it is supplied. Try to keep the moisture content between 4 to 6%.

To maintain the right level of moisture content, bear in mind the following considerations.

- Store paper in a cool, well-ventilated place.
- Store paper flat and unopened in the package. Once the package is opened, reseal it if the paper is not to be used for a while.
- Store paper sealed in the original package and box. Put a pallet under the carton to keep it raised above the floor. Especially during rainy seasons keep the paper a sufficient distance away from wooden or concrete floors.
- Before using paper that has been stored, keep it at the proper moisture level for at least 48 hours.
- Do not store paper where it is exposed to heat, sunlight, or dampness.

Other Paper Specifications

Porosity: The density of the paper fibers.

Stiffness: Paper must be stiff enough or it may buckle in the machine, causing jams.

Curl: Most paper naturally tends to curl after the package is opened. When paper passes through the fixing unit, it curls upward slightly. To deliver flat printouts, load the paper so that the curl faces towards the bottom of the paper tray.

Static electricity: During printing, paper is electrostatically charged so that the toner adheres. Choose paper that can be discharged quickly so that copies do not cling together.

Whiteness: Paper whiteness affects print contrast. Use whiter paper for sharper, brighter copies.

Quality: Machine problems may occur if sheet sizes are not uniform or if corners are not square, edges are rough, sheets are uncut, or edges or corners are crushed. In order to prevent these problems, be especially careful when you cut the paper yourself.

Packaging: Choose paper that is properly packaged and stacked in boxes. Ideally, the packaging itself should have been treated with a coating to inhibit moisture.

Specially treated paper: We do not recommend printing onto the following types of paper, even if it conforms to the basic specifications. When you use these kinds of paper, purchase a small amount first as a sample to test.

- Glossy paper
- Watermarked paper
- Paper with an uneven surface
- Perforated paper

Paper Sizes that can be Used with This Machine

Paper of the following sizes is supported by the machine.

Measurements in the table take into account a ±0.7 mm dimensional accuracy for length and width. Corner angles must be 90° ± 0.2°.

- A3 (297 × 420 mm) *1
- A4 (297 × 210 mm)
- A5 (210 × 148 mm)
- A6 (148 × 105 mm)
- B4 (257 × 364 mm) *1
- B5 (257 × 182 mm)
- B6 (182 × 128 mm)
- 216×340 mm*1
- SRA3 (320 × 450 mm) *1
- Ledger*1
- Letter
- Legal
- Statement
- Executive (7-1/4 × 10-1/2")
- 12×18" (304.8 × 457 mm) *1
- Oficio II
- Folio (210 × 330 mm)
- 8K (273 × 394 mm) *1
- 16K (273 × 197 mm)
- ISO B5 (176 × 250 mm)
- Envelope #10 (4-1/8 × 9-1/2")
- Envelope #9 (3-7/8 × 8-7/8")
- Envelope #6 3/4 (3-5/8 × 6-1/2")
- Envelope Monarch (3-7/8 × 7-1/2")
- Envelope DL (110 × 220 mm)
- Envelope C5 (162 × 229 mm)
- Envelope C4 (229 × 324 mm) *1
- Hagaki (Cardstock) (100 × 148 mm)
- Oufuku hagaki (Return postcard) (148 × 200 mm)
- Youkei 4 (105 × 235 mm)
- Youkei 2 (114 × 162 mm)
- Custom
  Cassette 1: 98 × 148 to 297 × 356 mm
  Cassette 2 to 4: 98 × 148 to 320 × 457 mm*2
  Multi Purpose Tray: 98 × 148 to 320 × 457 mm

*1 This paper cannot be used in cassette 1.
*2 The Paper Feeder (500-sheets×2) can only be used for cassettes 3 and 4.

Special Paper

This section describes printing onto special paper and print media.

Special Paper that can be Used with This Machine

- Transparencies
- Preprinted paper
- Bond paper
- Recycled paper
- Thin paper
- Letterhead
- Colored paper
- Prepunched paper
- Envelopes
- Hagaki (Cardstock)
- Thick paper
- Labels
- Coated
- High-quality paper
- Index tab dividers (136 to 256 g/m^2)

When using these paper and media, choose those that are designed specifically for copiers or page printers (such as laser printers). Use the multi purpose tray for transparencies, label paper, coated paper and index tab dividers.

Choosing Special Paper

Although special paper that meets the following requirements can be used with the machine, print quality will vary considerably due to differences in the construction and quality of special paper. Thus, special paper is more likely than regular paper to cause printing problems. Before purchasing special paper in volume, try testing a sample to ensure the print quality is satisfactory. General precautions when printing onto special paper are given below. Note that we are not responsible for any harm to the user or damage to the machine caused by moisture or specifications of special paper.

Select a cassette or multi purpose tray for special paper.

Transparencies

Transparencies must be able to withstand the heat of printing. Transparencies must meet the following conditions.

Heat resistance	Must withstand at least 190°C
Thickness	0.100 to 0.110 mm
Material	Polyester
Dimensional accuracy	±0.7 mm
Squareness of corners	90° ±0.2°

To avoid problems, use the multi purpose tray for transparencies and load transparencies with the long side facing the machine.

If transparencies jam frequently at output, try pulling the leading edge of sheets gently as they are ejected.

Label

Be sure to feed labels from the multi purpose tray.

For selecting labels, use extreme care so that the adhesive may not come in direct contact with any part of the machine and that the labels are not easily peeled from the carrier sheet. Adhesives that stick to the drum or rollers and peeled labels remaining in the machine may cause a failure.

When printing onto labels, you must be liable for the print quality and possible trouble.

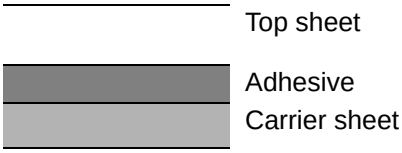

Labels consist of three layers as shown in the illustration. The adhesive layer contains materials that are easily affected by the force applied in the machine. The carrier sheet bears the top sheet until the label is used. This composition of labels may cause more problems.

The label surface must be covered completely with the top sheet. Gaps between labels may cause peeling of labels, resulting in a serious failure.

Some label paper has large margins on the top sheet. When using such paper, do not peel these margins from the carrier sheet before completing output.

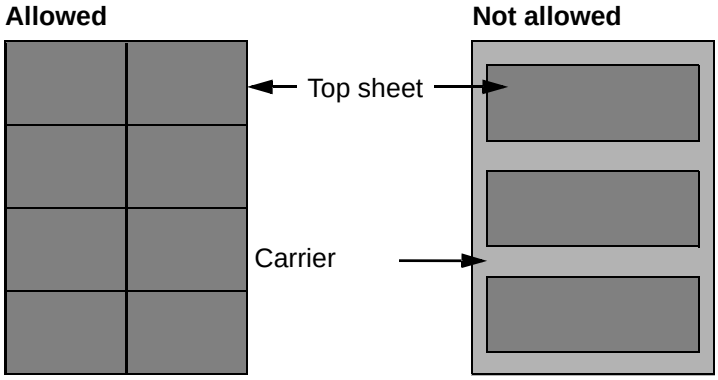

Use label paper that conforms to the following specifications.

Top sheet weight	44 to 74 g/m²
Basis weight (overall paper weight)	104 to 151 g/m²
Top sheet thickness	0.086 to 0.107 mm
Overall paper thickness	0.115 to 0.145 mm
Moisture content	4 to 6 % (composite)

Hagaki (Cardstock)

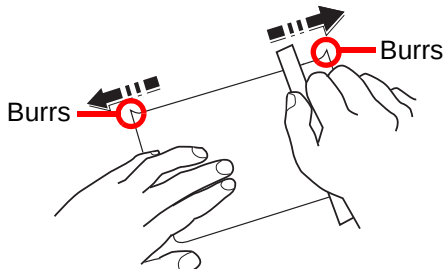

Before loading Hagaki (Cardstock), fan them and align the edges. Hagaki (Cardstock) should be fed from the MP tray with the print-side down or the cassette and the optional paper feeder with the print-side up. If the Hagaki (Cardstock) paper is curled, straighten it before loading. Printing onto curled Hagaki (Cardstock) may cause jams.

Use unfolded Oufuku hagaki (Return postcard) (available at post offices). Some Hagaki (Cardstock) may still have rough edges developed by a paper cutter on the back side. Remove any such rough edges by placing the Hagaki (Cardstock) on a flat surface and rubbing the edges gently a few times with a ruler.

Envelopes

Envelopes should be fed from the MP tray with the print-side down or the cassette and the optional paper feeder with the print-side up.

NOTE

Do not load paper above the load limits located on the paper width guide of the cassette and the optional paper feeder.

Due to the structure of envelopes, printing evenly over the entire surface may not be possible in some cases. Thin envelopes in particular may be wrinkled by the machine in some cases as they pass through. Before purchasing envelopes in volume, try testing a sample to ensure the print quality.

Storing envelopes for a long period may cause them to become wrinkled. Thus, keep the package sealed until you are ready to use them.

Keep the following points in mind.

- Do not use envelopes with exposed adhesive. In addition, do not use the type of envelope in which the adhesive is exposed after the top layer is peeled off. Serious damage may be caused if the paper covering the adhesive comes off in the machine.
- Do not use envelopes with certain special features. For example, do not use envelopes with a grommet for winding a string to close the flap or envelopes with an open or film-covered window.
- If paper jams occur, load fewer envelopes at once.

Thick Paper

Before loading thick paper, fan it and align the edges. Some thick paper may still have rough edges developed by a paper cutter on the back side. Remove any such rough edges just as with Hagaki (Cardstock) by placing the paper on a flat surface and rubbing the edges gently a few times with a ruler. Printing onto paper with rough edges may cause jams.

NOTE

If the paper is not supplied correctly even after it is smoothed, load the paper with the leading edge raised a few millimeters.

Colored Paper

Colored paper must conform to the specifications.

Basic Paper Specifications (page 11-13)

In addition, the pigments in the paper must be able to withstand the heat of printing (up to 200°C or 392°F).

Preprinted Paper

Preprinted paper must conform to the specifications.

Basic Paper Specifications (page 11-13)

The colored ink must be able to withstand the heat of printing. It must be resistant to silicone oil as well. Do not use paper with a treated surface such as glossy paper used for calendars.

Recycled Paper

Recycled paper must conform to the specifications; however, its whiteness may be considered separately.

Basic Paper Specifications (page 11-13)

NOTE

Before purchasing recycled paper in volume, try testing a sample to ensure satisfactory print quality.

Coated Paper

Coated paper is created by treating the surface of the base paper with a coating that provides higher printing quality than plain paper. Coated paper is used for particularly high quality printing.

The surface of high-quality or medium-quality paper is coated with special agents that improve ink adhesion by making the paper surface smoother. These agents are used either to coat both sides of the paper or just one side. The coated side appears slightly glossy.

IMPORTANT

When printing on coated paper in very humid environments, ensure that the paper is kept dry as moisture may cause sheets to stick together when they are fed into the machine. If printing in very humid environments, set coated paper for one sheet each.

Specifications

IMPORTANT

Specifications are subject to change without notice.

NOTE

For more information on using the FAX, refer to the following:

FAX Operation Guide

Machine

Item		Description
Type		Desktop
Printing Method		Electrophotography by semiconductor laser
Paper Weight	**Cassette**	52 to 300 g/m^2
	Multi Purpose Tray	52 to 300 g/m^2
Paper Type	**Cassette**	Plain, Rough, Vellum, Recycled, Preprinted, Bond, Cardstock, Color, Prepunched, Letterhead, Envelope, Thick, High Quality, Custom (Duplex: Same as Simplex)
	Multi Purpose Tray	Plain, Transparency (OHP film), Rough, Vellum, Labels, Recycled, Preprinted, Bond, Cardstock, Color, Prepunched, Letterhead, Envelope, Thick, High Quality, Coated, Index Tab Dividers, Custom 1 to 8
Paper Size	**Cassette 1**	A4, A5, A6, B5, B6, Letter, Legal, Statement, Executive, Oficio II, Folio, 16K, ISO B5, Envelope #10, Envelope #9, Envelope #6, Envelope Monarch, Envelope DL, Envelope C5, Hagaki (Cardstock), Oufuku Hagaki (Return postcard), Youkei 4, Youkei 2, Custom (98 × 148 mm to 297 × 356 mm)
	Cassette 2	A3, A4, A5, A6, B4, B5, B6, 216×340 mm, SRA3, Ledger, Letter, Legal, Statement, Executive, 12×18", Oficio II, Folio, 8K, 16K, ISO B5, Envelope #10, Envelope #9, Envelope #6, Envelope Monarch, Envelope DL, Envelope C5, Envelope C4, Hagaki (Cardstock), Oufuku Hagaki (Return postcard), Youkei 4, Youkei 2, Custom (98 × 148 mm to 320 × 457 mm)
	Multi Purpose Tray	A3, A4, A5, A6, B4, B5, B6, 216×340 mm, SRA3, Ledger, Letter, Legal, Statement, Executive, 12×18", Oficio II, Folio, 8K, 16K, ISO B5, Envelope #10, Envelope #9, Envelope #6, Envelope Monarch, Envelope DL, Envelope C5, Envelope C4, Hagaki (Cardstock), Oufuku Hagaki (Return postcard), Youkei 4, Youkei 2, Custom (98 × 148 mm to 320 × 457 mm) Banner sheet (210 × 470.1 to 304.8 × 1,220 mm/8.26" × 18.5" to 12" × 48")
Printable Area		Print margin for top, bottom and both sides is 4 mm

Item		Description
Warm-up Time (22°C/71.6°F, 60%)	**Power on**	2552ci 16 seconds or less 3252ci 16 seconds or less 3552ci 17 seconds or less 4052ci 17 seconds or less 5052ci 17 seconds or less 6052ci 17 seconds or less
	Low Power	2552ci 10 seconds or less 3252ci 10 seconds or less 3552ci 15 seconds or less 4052ci 15 seconds or less 5052ci 15 seconds or less 6052ci 15 seconds or less
	Sleep	2552ci 16 seconds or less 3252ci 16 seconds or less 3552ci 17 seconds or less 4052ci 17 seconds or less 5052ci 17 seconds or less 6052ci 17 seconds or less
Paper Capacity	**Cassette**	500 sheets (80 g/m^2)*1
	Multi Purpose Tray	150 sheets (A4/Letter or smaller) (80 g/m^2), 50 sheets (larger than A4/Letter) (80 g/m^2) 1 sheet (Banner sheet (210 × 470.1 to 304.8 × 1,220 mm/8.26" × 18.5" to 12" × 48")) (136 to 163 g/m^2)
Output Tray Capacity	**Inner tray**	500 sheets (80 g/m^2)
Image Write System		Semiconductor laser and electrophotography
Memory		4.0 GB
Large Capacity Storage		2552ci SSD 8 GB/Hard Disk 320 GB 3252ci SSD 8 GB/Hard Disk 320 GB 3552ci SSD 8 GB/Hard Disk 320 GB 4052ci SSD 8 GB/Hard Disk 320 GB 5052ci SSD 8 GB/Hard Disk 320 GB 6052ci SSD 8 GB/Hard Disk 320 GB
Interface	**Standard**	USB Interface Connector: 1 (Hi-Speed USB) Network interface: 1 (10 BASE-T/100 BASE-TX/1000 BASE-T (IPv6, IPv4, IPSec), 802.3a supported) USB Port: 4 (Hi-Speed USB) Wireless LAN: 1
	Option	eKUIO: 2*2 Fax: 2*3

Item		Description
Operating Environment	**Temperature**	10 to 32.5°C/50 to 90.5°F
	Humidity	10 to 80 %
	Altitude	3,500 m/11,482 ft maximum
	Brightness	1,500 lux maximum
Dimension (W × D × H) (without Document Processor)		23.71 " × 26.19" × 31.11" 602 × 665 × 790 mm
Weight		2552ci: Approx. 196.3 lb/Approx. 89 kg (without toner container) 3252ci: Approx. 196.3 lb/Approx. 89 kg (without toner container) 3552ci: Approx. 202.9 lb/Approx. 92 kg (without toner container) 4052ci: Approx. 202.9 lb/Approx. 92 kg (without toner container) 5052ci: Approx. 202.9 lb/Approx. 92 kg (without toner container) 6052ci: Approx. 202.9 lb/Approx. 92 kg (without toner container)
Space Required (W × D) (Using multi purpose tray)		36.23" × 26.19" 920 × 665 mm
Power Source		120 V Specification Model: 120 V ∿ 60 Hz 12 A 230 V Specification Model: 220 to 240 V ∿ 50/60 Hz 7.2 A
Options		➔ Optional Equipment (page 11-2)

*1 Up to upper limit height line in the cassette.
*2 When two optional interface are installed, a fax line can not be installed.
*3 When IB-50 or IB-51 is installed, only one fax line can be installed.

Copy Functions

Item		Description		
Copy Speed	**2552ci**		Black and White Copying	Full Color Copying
		A4/Letter	25 sheets/min	25 sheets/min
		A4-R/Letter-R	17 sheets/min	17 sheets/min
		A3/Ledger	12 sheets/min	12 sheets/min
		B4	15 sheets/min	15 sheets/min
		Legal	15 sheets/min	15 sheets/min
		B5	25 sheets/min	25 sheets/min
		B5-R	17 sheets/min	17 sheets/min
		A5-R	12 sheets/min	12 sheets/min
		A6-R	12 sheets/min	12 sheets/min
	3252ci		Black and White Copying	Full Color Copying
		A4/Letter	32 sheets/min	32 sheets/min
		A4-R/Letter-R	22 sheets/min	22 sheets/min
		A3/Ledger	16 sheets/min	16 sheets/min
		B4	19 sheets/min	19 sheets/min
		Legal	19 sheets/min	19 sheets/min
		B5	32 sheets/min	32 sheets/min
		B5-R	22 sheets/min	22 sheets/min
		A5-R	16 sheets/min	16 sheets/min
		A6-R	16 sheets/min	16 sheets/min
	3552ci		Black and White Copying	Full Color Copying
		A4/Letter	35 sheets/min	35 sheets/min
		A4-R/Letter-R	24 sheets/min	24 sheets/min
		A3/Ledger	17 sheets/min	17 sheets/min
		B4	21 sheets/min	21 sheets/min
		Legal	21 sheets/min	21 sheets/min
		B5	35 sheets/min	35 sheets/min
		B5-R	24 sheets/min	24 sheets/min
		A5-R	17 sheets/min	17 sheets/min
		A6-R	17 sheets/min	17 sheets/min
	4052ci		Black and White Copying	Full Color Copying
		A4/Letter	40 sheets/min	40 sheets/min
		A4-R/Letter-R	28 sheets/min	28 sheets/min
		A3/Ledger	20 sheets/min	20 sheets/min
		B4	24 sheets/min	24 sheets/min
		Legal	24 sheets/min	24 sheets/min
		B5	40 sheets/min	40 sheets/min
		B5-R	28 sheets/min	28 sheets/min
		A5-R	20 sheets/min	20 sheets/min
		A6-R	20 sheets/min	20 sheets/min

Item		Description		
Copy Speed	**5052ci**		Black and White Copying	Full Color Copying
		A4/Letter	50 sheets/min	50 sheets/min
		A4-R/Letter-R	35 sheets/min	35 sheets/min
		A3/Ledger	25 sheets/min	25 sheets/min
		B4	30 sheets/min	30 sheets/min
		Legal	30 sheets/min	30 sheets/min
		B5	50 sheets/min	50 sheets/min
		B5-R	35 sheets/min	35 sheets/min
		A5-R	25 sheets/min	25 sheets/min
		A6-R	25 sheets/min	25 sheets/min
	6052ci		Black and White Copying	Full Color Copying
		A4/Letter	60 sheets/min	55 sheets/min
		A4-R/Letter-R	42 sheets/min	38 sheets/min
		A3/Ledger	30 sheets/min	27 sheets/min
		B4	36 sheets/min	33 sheets/min
		Legal	36 sheets/min	33 sheets/min
		B5	60 sheets/min	55 sheets/min
		B5-R	42 sheets/min	38 sheets/min
		A5-R	30 sheets/min	27 sheets/min
		A6-R	30 sheets/min	27 sheets/min
First Copy Time (A4, place on the platen, feed from Cassette)	**Black and White**	2552ci 6.4 seconds or less 3252ci 5.3 seconds or less 3552ci 4.5 seconds or less 4052ci 4.5 seconds or less 5052ci 3.7 seconds or less 6052ci 3.4 seconds or less		
	Color	2552ci 8.5 seconds or less 3252ci 7.0 seconds or less 3552ci 5.9 seconds or less 4052ci 5.9 seconds or less 5052ci 4.8 seconds or less 6052ci 4.4 seconds or less		
Zoom Level		Manual mode: 25 to 400%, 1% increments Auto mode: Preset Zoom		
Continuous Copying		1 to 999 sheets		
Resolution		1200 × 1200 dpi (multi-bit)		
Supported Original Types		Sheet, Book, 3-dimensional objects (maximum original size: A3/Ledger)		
Original Feed System		Fixed		

Printer Functions

Item		Description		
Printing Speed			Black and White Printing	Full Color Printing
	2552ci	12×18"/SRA3	12 sheets/min	12 sheets/min
	3252ci	12×18"/SRA3	16 sheets/min	16 sheets/min
	3552ci	12×18"/SRA3	17 sheets/min	17 sheets/min
	4052ci	12×18"/SRA3	20 sheets/min	20 sheets/min
	5052ci	12×18"/SRA3	25 sheets/min	25 sheets/min
	6052ci	12×18"/SRA3	30 sheets/min	27 sheets/min
		Other than the above size, specifications are the same as those of Copy Speed.		
First Print Time (A4, feed from Cassette)	**Black and White**	2552ci 7.0 seconds or less 3252ci 5.9 seconds or less 3552ci 5.1 seconds or less 4052ci 5.1 seconds or less 5052ci 4.3 seconds or less 6052ci 3.8 seconds or less		
	Color	2552ci 9.2 seconds or less 3252ci 7.7 seconds or less 3552ci 6.5 seconds or less 4052ci 6.5 seconds or less 5052ci 5.4 seconds or less 6052ci 5.1 seconds or less		
Resolution		4800 dpi equivalent × 1200 dpi		
Operating System		Windows XP, Windows Server 2003, Windows Vista, Windows 7, Windows 8, Windows 8.1, Windows 10, Windows Server 2008/R2, Windows Server 2012/R2, Mac OS 10.5 or later		
Interface		USB Interface Connector: 1 (Hi-Speed USB) Network interface: 1 (10 BASE-T/100 BASE-TX/1000 BASE-T (IPv6, IPv4, IPSec), 802.3a supported) Optional Interface (Option): 2 (For IB-50/IB-51 mounting) Wireless LAN: 1		
Page Description Language		PRESCRIBE		
Emulations		PCL6 (PCL-XL, PCL-5c), KPDL3 (PostScript3 compatible), PDF, XPS, OpenXPS		

Scanner Functions

Item		Description	
Resolution		600 dpi, 400 dpi, 300 dpi, 200×400 dpi, 200 dpi, 200×100 dpi	
File Format		TIFF, JPEG, XPS, Open XPS, PDF (MMR/JPEG compression/High compressive PDF/OCR Text Recognition PDF (Option))	
Scanning Speed[*1]		(A4 landscape, 300 dpi, Image quality: Text/Photo original)	
	2552ci	1-sided B/W 80 Images/min 2-sided B/W 160 Images/min	Color 80 Images/min Color 160 Images/min
	3252ci	1-sided B/W 80 Images/min 2-sided B/W 160 Images/min	Color 80 Images/min Color 160 Images/min
	3552ci	1-sided B/W 100 Images/min 2-sided B/W 180 Images/min	Color 100 Images/min Color 180 Images/min
	4052ci	1-sided B/W 100 Images/min 2-sided B/W 180 Images/min	Color 100 Images/min Color 180 Images/min
	5052ci	1-sided B/W 100 Images/min 2-sided B/W 180 Images/min	Color 100 Images/min Color 180 Images/min
	6052ci	1-sided B/W 100 Images/min 2-sided B/W 180 Images/min	Color 100 Images/min Color 180 Images/min
Interface		Ethernet (10 BASE-T/100 BASE-TX/1000 BASE-T)	
Transmission System		SMB, SMTP, FTP, FTP over SSL, USB, TWAIN[*2], WIA[*3], WSD	

*1 When using the document processor (Dual Scan DP) (except TWAIN and WIA scanning)
*2 Available Operating System: Windows XP/Windows Vista/Windows Server 2003/Windows Server 2008/ Windows Server 2008 R2/Windows 7/Windows 8/Windows 8.1/Windows 10/Windows Server 2012/ Windows Server 2012 R2
*3 Available Operating System: Windows Vista/Windows Server 2008/Windows Server 2008 R2/Windows 7/ Windows 8/Windows 8.1/Windows 10/Windows Server 2012/Windows Server 2012 R2

Document Processor

Item	Description		
	Document Processor (Automatic 2-Sided)		**Document Processor (Dual scan DP)**
Type	DP-7100	DP-7120	DP-7110
Original Feed Method	Automatic feed		
Supported Original Types	Sheet originals		
Paper Size	Maximum: A3/Ledger 11.69" × 17"/297 × 432 mm (Long-sized 11.69" × 74.8"/297 × 1,900 mm)		
	Minimum: A6-R/ Statement-R 4.13" × 5.82"/ 105 × 148 mm	Minimum: A5-R/ Statement-R 5.51" × 7.16"/ 140 × 182 mm	Minimum: A6-R/ Statement-R 4.13" × 5.82"/ 105 × 148 mm

Item	Description		
	Document Processor (Automatic 2-Sided)		Document Processor (Dual scan DP)
Paper Weight	1-sided: 35 to 160 g/m^2 2-sided: 50 to 120 g/m^2	1-sided: 45 to 160 g/m^2 2-sided: 50 to 120 g/m^2	1-sided: 35 to 220 g/m^2 2-sided: 50 to 220 g/m^2
Loading Capacity	140 sheets (50 to 80 g/m^2)*1 maximum	50 sheets (50 to 80 g/m^2)*1 maximum	270 sheets (50 to 80 g/m^2)*1 maximum
Dimensions (W × D × H)	23.35" × 20.91" × 5.46" 593 × 531 × 138.5 mm	23.63" × 19.77" × 5.04" 600 × 502 × 128 mm	23.63" × 20.20" × 6.70" 600 × 513 × 170 mm
Weight	Approx. 19.9 lbs./ Approx. 9 kg	Approx. 16.6 lbs./ Approx. 7.5 kg	Approx. 32.0 lbs./ Approx. 14.5 kg

*1 Up to upper limit height line in the document processor.

Paper Feeder (500-sheet×2)

Item	Description
Paper Supply Method	Friction roller feeder (No. Sheets: 550, 64 g/m^2, 2 cassettes/ No. Sheets: 500, 80 g/m^2, 2 cassettes)
Paper Size	A3, A4, A5, A6, B4, B5, B6, 216×340 mm, SRA3, Ledger, Letter, Legal, Statement, Executive, 12×18", Oficio II, Folio, 8K, 16K, ISO B5, Envelope #10, Envelope #9, Envelope #6, Envelope Monarch, Envelope DL, Envelope C5, Envelope C4, Hagaki (Cardstock), Oufuku Hagaki (Return postcard), Youkei 4, Youkei 2, Custom (98 × 148 mm to 320 × 457 mm)
Supported Paper	Paper weight: 52 to 300 g/m^2 Media types: Plain, Recycled, Special paper
Dimensions (W × D × H)	23.63" × 26.19" × 12.73" 600 × 665 × 323.2 mm
Weight	Approx. 50.8 lbs. / Approx. 23 kg

Large Capacity Feeder (1,500-sheet×2)

Item	Description
Paper Supply Method	Friction roller feeder (No. Sheets: 1,750, 64 g/m^2, 2 cassettes/ No. Sheets: 1,500, 80 g/m^2, 2 cassettes)
Paper Size	A4,B5, Letter
Supported Paper	Paper weight: 52 to 300 g/m^2 Media types: Plain, Recycled, Special paper
Dimensions (W × D × H)	23.63" × 26.19" × 12.73" 600 × 665 × 323.2 mm
Weight	Approx. 66.2 lbs. / Approx. 30 kg

Side Feeder (3,000-sheet)

Item	Description
Paper Supply Method	Feed & reverse roller method (No. Sheets: 3,500, 64 g/m^2/ No. Sheets: 3,750, 80 g/m^2)
Paper Size	A4,B5, Letter
Supported Paper	Paper weight: 52 to 300 g/m^2 Media types: Plain, Recycled, Special paper
Dimensions (W × D × H)	13.82" × 23.04" × 18.47" 351 × 585 × 469 mm
Weight	Approx. 58.5 lbs. / Approx. 26.5 kg

Inner Finisher

Item		Description	
Number of Trays		1 tray	
Paper Size (80 g/m^2) **Finisher tray (no stapling)**		A3, B4, 216×340 mm, SRA3, Ledger, Legal, 12×18", Oficio II, Folio, 8K, Envelope C4: 250 sheets A4-R, A4, A5-R, A5, A6, B5-R, B5, B6, Letter-R, Letter, Statement, Executive, 16K-R, 16K, ISO B5, Envelope #10, Envelope #9, Envelope #6 3/4, Envelope Monarch, Envelope DL, Envelope C5, Hagaki (Cardstock), Oufukuhagaki (Return postcard), Youkei 4, Youkei 2: 500 sheets	
Stapling	**Number of Sheets**	A3, B4, 216×340 mm, Ledger, Legal, Oficio II, 8K	30 sheets (52 to 105 g/m^2) 2 cover sheet only (106 to 300 g/m^2)
		A4-R, A4, B5, Letter-R, Letter, 16K	50 sheets (52 to 90 g/m^2) 40 sheets (91 to 105 g/m^2) 2 cover sheet only (106 to 300 g/m^2)
	Media types	Plain, Recycled, Prepunched, Preprinted, Bond, Letterhead, Color, Coated, Thick, High Quality, Custom	
Dimensions (W × D × H) **(When pulling the tray)**		27.36" × 20.99" × 8.69" 694.8 × 533.1 × 220.5 mm	
Weight		25.4 lbs. or less / 11.5 kg or less	

Punch Unit (For Inner Finisher)

Item			Description
Paper Size	**Inch**	**2 Hole**	A3, A4-R, A4, A5-R, B4, B5-R, B5, Ledger, Letter-R, Letter, Legal, Statement-R, 12×18", Folio, 8K, 16K-R, 16K
		3 Hole	A3, A4, Letter, Ledger, 12×18", 8K, 16K
	cm	**2 Hole**	A3, A4-R, A4, A5-R, B4, B5-R, B5, Ledger, Letter-R, Letter, Legal, Statement-R, 12×18", Folio, 8K, 16K-R, 16K
		4 Hole	A3, A4, Letter, Ledger, 12×18", 8K, 16K

Item	Description
Paper Weight	52 - 300 g/m^2
Media types	Plain, Preprinted, Bond, Recycled, Letterhead, Color, Thick, Coated, High Quality, Custom 1 to 8

1,000-Sheet Finisher

Item		Description	
Number of Trays		1 tray	
Paper Size (80 g/m^2)	**Finisher tray (Non-stapling)**	A3, A5-R, B4, B5-R, B6-R, 216×340 mm, SRA3, Ledger, Legal, Statement-R, Executive, 12×18", Oficio II, Folio, 8K, 16K-R: 500 sheets A4-R, A4, B5, Letter-R, Letter, 16K: 1,000 sheets	
Supported Paper Weight		Stapling: 90 g/m^2 or less	
Stapling	**Number of Sheets**	A3, B4, B5-R, 216×340 mm, Ledger, Legal, 12×18", Oficio II, 16K-R, 8K	30 sheets (52 to 105 g/m^2) 2 cover sheet only (106 to 300 g/m^2)
		A4-R, A4, B5, Letter-R, Letter, 16K	50 sheets (52 to 90 g/m^2) 40 sheets (91 to 105 g/m^2) 2 cover sheet only (106 to 300 g/m^2)
	Media types	Plain, Recycled, Prepunched, Preprinted, Bond, Letterhead, Color, Coated, Thick, High Quality, Custom 1 to 8	
Dimensions (W × D × H)		21.58" × 24.36" × 41.34" 548 × 618.5 × 1,050 mm	
Weight		Approx. 66.2 lbs. or less / Approx. 30 kg or less	
Space Required (W × D) (When pulling the tray)		26.23" × 24.36" 666 × 618.5 mm	

4,000-Sheet Finisher

Item		Description
Number of Trays		2 trays
Paper Size (80 g/m^2)	**Tray A (Non-Stapling)**	A3, B4, B5-R, 216×340 mm, SRA3, Ledger, Legal, Executive, 12×18", Oficio II, Folio, 8K, 16K-R: 1,500 sheets A4-R, A4, B5, Letter-R, Letter, 16K: 4,000 sheets A5-R, B6-R, Statement-R: 500 sheets
	Tray B	A3, A4-R, A4, A5-R, A6-R, B4, B5-R, B5, B6-R, 216×340 mm, SRA3, Ledger, Letter-R, Letter, Legal, Statement-R, Executive, 12×18", Oficio II, Folio, 8K, 16K-R, 16K, ISO B5, Cardstock, Oufuku hagaki (Return postcard), Youkei 4, Youkei 2: 200 sheets
Supported Paper Weight		Stapling: 90 g/m^2 or less

Item		Description	
Stapling	**Maximum Number**	A3, B4, B5-R, 216×340 mm, Ledger, Legal, 12×18", Oficio II, 8K, 16K-R	30 sheets (52 to 105 g/m^2) 2 cover sheet only (106 to 300 g/m^2)
		A4-R, A4, B5, Letter-R, Letter, 16K	65 sheets (52 to 90 g/m^2) 55 sheets (91 to 105 g/m^2) 2 cover sheet only (106 to 300 g/m^2)
	Media types	Plain, Preprinted, Bond, Recycled, Letterhead, Color, Prepunched, Thick, Coated, High Quality, Custom 1 to 8	
Dimensions (W × D × H)		23.91" × 26.32" × 41.79" 607.2 × 668.5 × 1,061.3 mm	
Weight		Approx. 88.2 lbs. or less / Approx. 40 kg or less	
Space Required (W × D) **(When pulling the tray)**		28.55" × 26.32" 725 × 668.5 mm	

Punch Unit (For 1,000-Sheet/4,000-Sheet Finisher)

Item			Description
Paper Size	**Inch**	**2 Hole**	A3, A4-R, A4, A5-R, B4, B5-R, B5, Ledger, Letter-R, Letter, Legal, Statement-R, 12×18", Folio, 8K, 16K, 16K-R
		3 Hole	A3, A4, Letter, Ledger, 12×18", 8K, 16K
	cm	**2 Hole**	A3, A4-R, A4, A5-R, B4, B5-R, B5, Ledger, Letter-R, Letter, Legal, Statement-R, 12×18", Folio, 8K, 16K, 16K-R
		4 Hole	A3, A4, Letter, Ledger, 12×18", 8K, 16K
Paper Weight			45 - 300 g/m^2
Media types			Plain, Rough, Preprinted, Bond, Recycled, Letterhead, Color, Thick, Coated, High Quality, Custom 1 to 8

Mailbox

Item	Description
Number of Trays	7 trays
Paper Size **(80 g/m^2)**	A3, B4, Ledger, Legal, 8K: 50 sheets A4-R, A4, A5-R, B5-R, B5, 216×340 mm, Letter-R, Letter, Statement-R, Executive, Oficio II, Folio, 16K-R, 16K: 100 sheets
Dimensions (W × D × H)	20.08" × 15.75" × 18.51" 510 × 400 × 470 mm
Weight	Approx. 22.1 lbs. / Approx. 10 kg

Folding Unit

Item	Description	
Sizes	Bi-Fold	A3, B4, A4-R, Ledger, Legal, Letter-R, Oficio II, 8K
	Saddle Stitch	A3, B4, A4-R, Ledger, Letter-R, Legal, Oficio II, 8K
	Tri-Fold	A4-R, Letter-R
Number of Sheets	Bi-Fold	5 sheets (60 to 90 g/m^2) 3 sheets (91 to 120 g/m^2) 1 sheet (121 to 256 g/m^2)
	Saddle Stitch	16 sheets (60 to 90 g/m^2) 13 sheets (91 to 105 g/m^2) 1 cover sheet only (106 g/m^2 or heavier)
	Tri-Fold	5 sheets (60 to 90 g/m^2) 3 sheets (91 to 120 g/m^2)
Maximum Number for Storage (80 g/m^2)	Bi-Fold	5 sheets or less per set: 30 sets or more 6 to 10 sheets per set: 20 sets or more 11 to 16 sheets per set: 10 sets or more.
	Saddle Stitch	5 sheets or less per set: 30 sets or more 6 to 10 sheets per set: 20 sets or more 11 to 16 sheets per set: 10 sets or more.
	Tri-Fold	1 sheet per set: 30 sets or more 2 to 5 sheets per set: 5 sets or more
Media types	Bi-Fold	Plain, Recycled, Preprinted, Bond, Color, Prepunched, Letterhead, Thick, Coated, High Quality, Custom 1 to 8
	Saddle Stitch	Plain, Recycled, Preprinted, Bond, Color, Prepunched, Letterhead, Thick, Coated, High Quality, Custom 1 to 8
	Tri-Fold	Plain, Recycled, Preprinted, Bond, Color, Prepunched, Letterhead, Coated, High Quality, Custom 1 to 8

Job Separator Tray

Item	Description
Number of Trays	1 tray
Maximum Sheets	100 Sheets (80 g/m^2)
Paper Size	A3, A4-R, A4, A5-R, A5, A6-R, B4, B5-R, B5, B6-R, 216×340 mm, SRA3, Ledger, Letter-R, Letter, Legal, Statement-R, Executive, 12×18", Oficio II, Folio, 8K, 16K-R, 16K, ISO B5, Envelope #10, Envelope #9, Envelope #6, Envelope Monarch, Envelope DL, Envelope C5, Envelope C4, Hagaki (Cardstock), Oufuku hagaki (Return postcard), Youkei 4, Youkei 2, Custom (98 × 148 to 304.8 × 1,220 mm)
Paper Type	Paper weight: 52 to 300 g/m^2 Media types: Plain, Recycled, Special paper

Item	Description
Dimensions (W × D × H)	18.90" × 16.93" × 3.94" 480 × 430 × 100 mm
Weight	Approx. 1.4 lbs. / Approx. 0.6 kg

Banner Tray

Item	Description
Max. number of sheets	10 sheets (Multi Purpose tray)
Paper length	210 to 304.8 mm (8.26" to 12")
Paper width	Max. 1220.0 mm (48")
Paper Type	Paper weight: 136 to 163 g/m^2 Paper type: Heavy 2
Dimensions (W × D × H)	15.78" × 15.67" × 7.63" 400.6 × 397.8 × 193.6 mm
Weight	Approx. 1.2 lbs. / Approx. 0.5 kg

NOTE

Consult your dealer or service representative for recommended paper types.

Glossary

Accessibility

The machine is designed featuring good accessibility even for the elderly and those who are physically challenged or visually impaired. Touch panel is adjustable in two angles.

Apple Talk

AppleTalk offers file sharing and printer sharing and it also enables you to utilize application software that is on another computer on the same AppleTalk network.

Auto Form Feed Timeout

During data transmission, the machine may sometimes have to wait until receiving the next data. This is the auto form feed timeout. When the preset timeout passes, the machine automatically prints output. However, no output is performed if the last page has no data to be printed.

Auto-IP

Auto-IP is a module that enables dynamic IPv4 addresses to be assigned to a device on startup. However, DHCP requires a DHCP server. Auto-IP is a server-less method of choosing an IP address. IP addresses between 169.254.0.0 to 169.254.255.255 are reserved for Auto-IP and assigned automatically.

Auto Paper Selection

A function to automatically select paper in the same size as originals when printing.

Auto Sleep

A mode designed for electrical power saving, activated when the machine is left unused or there is no data transfer for a specific period. In Sleep mode, power consumption is kept to a minimum.

Bonjour

Bonjour, also known as zero-configuration networking, is a service that automatically detects computers, devices and services on an IP network. Bonjour, because an industry-standard IP protocol is used, allows devices to automatically recognize each other without an IP address being specified or DNS server being set. Bonjour also sends and receives network packets by UDP port 5353. If a firewall is enabled, the user must check that UDP port 5353 is left open so that Bonjour will run correctly. Some firewalls are set up so as to reject only certain Bonjour packets. If Bonjour does not run stably, check the firewall settings and ensure that Bonjour is registered on the exceptions list and that Bonjour packets are accepted. If you install Bonjour on Windows XP Service Pack 2 or later, the Windows firewall will be set up correctly for Bonjour.

Custom Box

The Custom Box function stores print data for each individual user on the printer and allows the user to print single or multiple copies of the stored data later using the printer's operation panel.

Default Gateway

This indicates the device, such as a computer or router, that serves as the entrance/exit (gateway) for accessing computers outside the network that you are on. When no specific gateway is designated for a destination IP address, data is sent to the host designated as the Default Gateway.

DHCP (Dynamic Host Configuration Protocol)

Dynamic Host Configuration Protocol (DHCP) that automatically resolves IP addresses, subnet masks, and gateway addresses on a TCP/IP network. DHCP minimizes the load of network management employing a large number of client computers because it relieves individual clients including printers from the IP address being assigned.

DHCP (IPv6)

DHCP (IPv6) is the next-generation of the Internet's Dynamic Host Configuration Protocol and supports IPv6. It extends the BOOTP startup protocol that defines the protocols used for transferring configuration information to hosts on the network. DHCP (IPv6) permits the DHCP server to use its expanded functionality to send configuration parameters to an IPv6 node. Because the network addresses that can be used are allocated automatically, the IPv6 node management workload is reduced in systems where the administrator has to exercise close control over IP address allocation.

dpi (dots per inch)

A unit for resolution, representing the number of dots printed per inch (25.4 mm).

EcoPrint Mode

A printing mode that helps save toner. Copies made in this mode are thus lighter than normal.

Emulation

The function to interpret and execute other printers' page description languages. The machine emulates operation of PCL6, KPDL3 (PostScript 3 compatible).

Enhanced WSD

Kyocera's proprietary web services.

FTP (File Transfer Protocol)

A protocol to transfer files on the TCP/IP network, whether the Internet or an intranet. Along with HTTP and SMTP/POP, FTP is now frequently used on the Internet.

Grayscale

A computer color expression. Displayed images of this sort are typically composed of shades of gray, varying from black at the weakest intensity to white at the strongest, without any other colors. Gray levels are displayed in numerical levels: that is, white and black only for 1 bit; 256 gray levels (including white and black) for 8 bits; and 65,536 gray levels for 16 bits.

Help

A ? (Help) key is provided on this machine's operation panel. If you are unsure of how to operate the machine, would like more information on its functions or are having problems getting the machine to work properly, press the ? (Help) key to view a detailed explanation on the touch panel.

IP Address

An Internet protocol address is a unique number that represents a specific computer or related device on the network. The format of an IP address is four sets of numbers separated by dots, e.g. 192.168.110.171. Each number should be between 0 and 255.

IPP

IPP (Internet Printing Protocol) is a standard that uses TCP/IP networks such as the Internet to enable print jobs to be sent between remote computers and printers. IPP is an extension of the HTTP protocol used to view websites and enables printing to be carried out via routers on printers in remote locations. It also supports the HTTP authentication mechanisms along with SSL server and client authentication as well as encryption.

Job Box

The Job Box function stores print data on the printer and allows users to print single or multiple copies of the stored data later using the printer's operation panel.

KPDL (Kyocera Page Description Language)

Kyocera's PostScript page description language compatible with Adobe PostScript Level 3.

Multi Purpose (MP) Tray

The paper supply tray on the front side of the machine. Use this tray instead of the cassettes when printing onto envelopes, Hagaki (Cardstock), transparencies, or labels.

NetBEUI (NetBIOS Extended User Interface)

An interface, developed by IBM in 1985, as an update from NetBIOS. It enables more advanced functions on smaller networks than other protocols such as TCP/IP, etc. It is not suitable for larger networks due to lack of routing capabilities to choose the most appropriate routes. NetBEUI has been adopted by IBM for its OS/2 and Microsoft for its Windows as a standard protocol for file sharing and printing services.

Outline font

With outline fonts, character outlines are represented with numerical expressions and fonts can be enlarged or reduced in different ways by changing the numeric values of those expressions. Printing remains clear even if you enlarge fonts, since the characters are defined with outlines represented with numerical expressions. You can specify the font size in steps of 0.25 points up to 999.75 points.

PDF/A

This is "ISO 19005-1. Document management - Electronic document file format for long-term preservation - Part 1: Use of PDF (PDF/A)", and is a file format based on PDF 1.4. It has been standardized as ISO 19005-1, and is a specialization of PDF, which has been mainly used for printing, for long-term storage. A new part, ISO 19005-2 (PDF/A-2), is currently being prepared.

POP3 (Post Office Protocol 3)

A standard protocol to receive E-mail from the server in which the mail is stored on the Internet or an intranet.

PostScript

A page description language developed by Adobe Systems. It enables flexible font functions and highly-functional graphics, allowing higher quality printing. The first version called Level 1 was launched in 1985, followed by Level 2 that enabled color printing and two-byte languages (e.g. Japanese) in 1990. In 1996, Level 3 was released as an update for the Internet access and PDF format as well as gradual improvements in implementation technologies.

PPM (prints per minute)

This indicates the number of A4 size printouts made in one minute.

Printer Driver

The software to enable you to print data created on any application software. The printer driver for the machine is contained in the DVD enclosed in the package. Install the printer driver on the computer connected to the machine.

RA (Stateless)

The IPv6 router communicates (transmits) information such as the global address prefix using ICMPv6. This information is the Router Advertisement (RA).

ICMPv6 stands for Internet Control Message Protocol, and is a IPv6 standard defined in the RFC 2463 "Internet Control Message Protocol (ICMPv6) for the Internet Protocol Version 6 (IPv6) Specification".

RAM Disk

Using part of the printer's memory as a virtual disk, you can set any amount of memory from overall printer memory as a RAM disk in order to use features such as electronic sorting (shortening print time).

Send as E-mail

A function to send the image data stored in the machine as an E-mail attachment. E-mail addresses can be selected from the list or entered at each time.

SMTP (Simple Mail Transfer Protocol)

A protocol for E-mail transmission over the Internet or an intranet. It is used for transferring mail between mail servers as well as for sending mail from clients to their servers.

Status Page

The page lists machine conditions, such as the memory capacity, total number of prints and scans, and paper source settings.

Subnet Mask

The subnet mask is a way of augmenting the network address section of an IP address.

A subnet mask represents all network address sections as 1 and all host address sections as 0. The number of bits in the prefix indicates the length of the network address. The term "prefix" refers to something added to the beginning and, in this context, indicates the first section of the IP address. When an IP address is written, the length of the network address is indicated by the prefix length after a forward slash (/). For example, "24" in the address "133.210.2.0/24". In this way, "133.210.2.0/24" denotes the IP address "133.210.2.0" with a 24-bit prefix (network section). This new network address section (originally part of the host address) made possible by the subnet mask is referred to as the subnet address. When you enter the subnet mask, be sure to set the "DHCP" setting to "Off".

TCP/IP (Transmission Control Protocol/Internet Protocol)

TCP/IP is a suite of protocols designed to define the way computers and other devices communicate with each other over a network.

TCP/IP (IPv6)

TCP/IP (IPv6) is based on the current Internet protocol, TCP/IP (IPv4). IPv6 is the next-generation Internet protocol and expands the available address space, which resolves the problem of the lack of addresses under IPv4, while also introducing other improvements such as additional security functionality and the capacity to prioritize data transmission.

TWAIN (Technology Without An Interesting Name)

A technical specification for connecting scanners, digital cameras, and other image equipment to computers. The TWAIN compatible devices enable you to process image data on any relevant application software. TWAIN is adopted on a large amount of graphic software (e.g. Adobe Photoshop) and OCR software.

USB (Universal Serial Bus) 2.0

A USB interface standard for Hi-Speed USB 2.0. The maximum transfer rate is 480 Mbps. This machine is equipped with USB 2.0 for high-speed data transfer.

WIA (Windows Imaging Acquisition)

A function to import images supported after Windows Me/XP from digital cameras and other peripheral devices. This function replaces what TWAIN used to do. The feature is provided as a part of Windows functions and improves ease of operation, so that you import images directly to My Computer without using any application.

WPS (Wi-Fi Protected Setup)

WPS is a network security standard created by Wi-Fi Alliance, to make it easy to connect with the wireless devices and set up the Wi-Fi Protected Access. The WPS-supported services can connect to the wireless access points by pushing a button or entering passphrases.

Index

Numerics

1,000-Sheet Finisher 11-4
2-sided/Book Original 6-75
4,000-Sheet Finisher 11-4

A

Accessibility 11-33
Accessibility Functions 2-26
Address Book 3-30
  Adding 3-30
  Contact 3-30
  Deleting 3-36
  Editing 3-35
  Group 3-34
Adjusting the Operation Panel Angle 2-11
Adjustment/Maintenance 8-72, 10-50
  Auto Color Correction 8-73
  Auto Drum Refresh 8-74
  Background Density Adjustment 8-72
  Calibration 8-74, 10-55
  Calibration Cycle 8-73
  Color Registration 8-73, 10-50
  Contrast 8-74
  Correcting Black Lines 8-73
  Density Adjustment 8-72
  Developer Refresh 8-74, 10-56
  Display Brightness 8-73
  Drum Heater 8-72
  Drum Refresh 8-72, 10-55
  Laser Scanner Cleaning 8-74, 10-56
  Memory Diagnostics 8-73
  Sharpness Adjustment 8-72
  Silent Mode 8-73
  System Initialization 8-73
  Tone Curve Adjustment 8-73, 10-54
AirPrint 4-16
Apache License (Version 2.0) 1-15
AppleTalk 11-33
Application 5-14, 8-75
Auto Error Clear 8-68
Auto Form Feed Timeout 11-33
Auto Image Rotation 6-69
  Default 8-19
Auto Panel Reset 8-68
Auto Paper Selection 11-33
Auto Sleep 2-40, 11-33
Auto-IP 11-33
  Settings 8-49, 8-53
Automatic 2-Sided Print Function 1-18

B

Background Density Adjustment 6-39, 8-72
  Default 8-19
Banner Printing 4-9
Banner Tray 11-5
  Using 4-12
Bates Stamp 6-66
Bluetooth Settings 8-66
Bonjour 11-33
  Settings 8-55
Booklet 6-49
Border Erase 6-47

C

Cables 2-6
Calibration 8-74, 10-55
Canceling Jobs 5-23, 5-42
Canceling Printing 4-15
Card Authentication Kit 11-6
Cardstock 11-18
Cassette
  Loading Envelopes or Cardstock 3-10
  Loading Paper 3-4, 3-7
  Paper Size and Media Type 8-7
Cassette 1 2-2
Cassette 2 2-2
Cassette 3 2-5
Cassette 4 2-5
Cassette 5 2-5
Cassette/MP Tray Settings 8-7
Centering 6-46
Character Entry Method 11-10
Checking and Editing Destinations 5-46
Checking the Counter 2-58
Checking the Remaining Amount of Toner 7-14
Cleaning 10-2
  Document Processor 10-2
  Glass Platen 10-2
  Slit Glass 10-3
Coated Paper 11-19
Collate/Offset 6-25
  Default 8-20
Color
  Background Density Adjustment 6-39
  Calibration 8-74, 10-55
  Color Balance 6-34
  Color Selection 6-32
  Hue Adjustment 6-35
  One-touch Image Adjust 6-36
  Saturation 6-39
Color Balance 6-34
Color Registration 8-73, 10-50
  Auto Correction 10-50
  Manual Correction 10-52
Color Selection 6-32
  Default 8-18
Color Toner Empty Action 8-18
Colored Paper 11-19
Combine 6-44
Command Center RX 2-61

Common Settings 8-10
Color Toner Empty Action 8-18
Customize Status Display 8-30
Default Screen 8-10
Display Status/Log 8-29
Error Handling 8-16
Function Defaults 8-18
Function Key Assignment 8-32
Keyboard Layout 8-11
Language 8-10
Low Toner Alert Level 8-29
Manual Staple 8-28
Measurement 8-15
Message Banner Print 8-30
Message Board Settings 8-31
Numeric Keypad Settings 8-32
Offset Documents by Job 8-28
Offset One Page Documents 8-29
Orientation Confirmation 8-18
Original/Paper Settings 8-11
Paper Output 8-17
Prevent Light Reflection 8-32
Remote Printing 8-31
Show Power Off Message 8-32
Sound 8-10
System Stamp 8-22
Toner Waste Full Alert 8-29
USB Keyboard Type 8-21
Confirmation Screen of Destinations 5-47
Connecting
LAN Cable 2-7
Power Cable 2-8
USB cable 2-8
Connection Method 2-6
Continuous Scan 6-69
Default 8-21
Contrast 6-38, 8-74
Control Section of the Finisher 2-5
Conventions Used in This Guide xxiii
Copy 5-20
Copy Settings 8-33
Auto % Priority 8-33
Auto Image Rotation Action 8-33
Auto Paper Selection 8-33
Paper Selection 8-33
Paper Size for Small Original 8-33
Preset Limit 8-33
Quick Setup Registration 8-33
Reserve Next Priority 8-33
Copy Speed 11-23, 11-24
Counting the Number of Pages Printed
Count by Paper Size 9-48
Counter 2-58
Each Job Account 9-50
Print Accounting Report 9-51
Total Accounting 9-50
Unknown ID Job 9-55
Cover 6-55
Custom Box 5-50, 11-33
Copying Documents 5-62, 5-63
Creating a New Custom Box 5-55
Deleting Custom Box 5-57
Deleting Documents 5-64
Editing Custom Box 5-56
Joining Documents 5-63
Moving Documents 5-62
Printing Documents 5-58
Saving Scanned Documents 5-59
Send to Me from BOX (E-mail) 5-60
Sending Documents 5-59
Storing Documents 5-57
Customize Status Display 8-30

D

Data Sanitization 8-65
Data Security 8-64
Data Security Kit 11-6
Date Format 8-68
Date/Time 8-68
Date/Timer/Energy Saver 8-68
Auto Error Clear 8-68
Auto Panel Reset 8-68
Date Format 8-68
Date/Time 8-68
EnergySaver RecoveryLevel 8-70
Error Clear Timer 8-69
Error Job Skip 8-69
Interrupt Clear Timer 8-69
Low Power Timer 8-69
Panel Reset Timer 8-69
Ping Timeout 8-71
Sleep Level 8-70
Sleep Rules 8-70
Sleep Timer 8-69
Time Zone 8-68
Unusable Time 8-69
Weekly Timer Settings 8-71

Default
Auto Image Rotation (Copy) 8-19
Backgrnd Density (Copy) 8-19
BackgrndDens.(Send/Store) 8-19
Border Erase Default 8-19
Border Erase to Back Page 8-19
Collate/Offset 8-20
Color Selection (Copy) 8-18
Color Selection (Send/Store) 8-18
Color TIFF Compression 8-19
Cont. Scan (Copy) 8-21
Continuous Scan (Copy) 8-21
Continuous Scan (FAX) 8-21
Continuous Scan (Send/Store) 8-21
DP Read Action 8-20
EcoPrint 8-19
E-mail Subject/Body 8-20
FAX TX Resolution 8-18
File Format 8-19
File Name Entry 8-20
File Separation 8-21
High Comp. PDF Image 8-19
i-FAX Subject/Body 8-20
Image Quality (File Format) 8-20
JPEG/TIFF Print 8-20
Margin 8-19
OCR Text Recognition 8-20
Org. Image (Send/Store) 8-18
Orig. Orient.(Send/Store) 8-18
Orig. Orientation (Copy) 8-18
Original Image (Copy) 8-18
PDF/A 8-20
Prevent Bleed(Send/Store) 8-19
Prevent Bleed-thru (Copy) 8-19
Primary OCR Language 8-21
Repeat Copy 8-21
Scan Resolution 8-18
Skip Blank Page (Copy) 8-21
Skip Blank Page (Send/Store) 8-21
Toner Save Level (EcoPrint) 8-19
Trapping 8-21
XPS Fit to Page 8-20
Zoom 8-19
Default Gateway 11-33
Settings 8-49, 8-53
Default Screen 8-10
Delete after Printed 6-83
Delete after Transmitted 6-83
Density 6-31
Density Adjustment 8-72
Destination
Adding a Destination 3-30
Address Book 3-30
Address Book Type 8-67
Check before Send 5-47, 8-34
Checking and Editing 5-46
Choosing from the Address Book 5-43
Choosing from the One Touch Key 5-45
Choosing from the Speed Dial 5-45
Confirmation Screen of Destinations 5-47
Entry Check for New Dest. 8-34
Multi Sending 5-40
Narrow Down 8-67
One Touch Key 3-37
Recall 5-48
Search 5-44
Sort 8-67
Developer Refresh 8-74, 10-56
Device 7-13
Device Information 2-18
DHCP 11-34
Settings 8-49, 8-53
DHCP (IPv6) 11-34
Settings 8-50, 8-54
Display Setting Screen 2-18
Display Status/Log 8-29
Disposing of the Punch Waste
1,000-Sheet Finisher 10-19
4,000-Sheet Finisher 10-20
Inner Finisher 10-17
Document Box
Basic Operation 5-51
Custom Box 5-50
Job Box 4-18, 5-50
Removable Memory Box 5-50
Document Box/Removable Memory
Custom Box 8-39
FAX Box 8-39
Job Box 8-39
Polling Box 8-39
Quick Setup Registration 8-40
Document Processor 2-2
Loading Originals 5-4
Originals Supported by the Document Processor 5-4
Part Names 2-2
Document Processor (Dual Scan) 11-4
Document Processor (Reverse Automatic) 11-4
Document Table 11-5
DP Read Action 6-74, 8-20
dpi 11-34
Drum Refresh 8-72, 10-55
DSM Scan 5-37
Protocol Settings 8-56
Duplex 6-52

E

EcoPrint 6-32, 11-34
Default 8-19
Printer 8-41

Edit Destination
Address Book 3-30
Address Book Defaults 8-67
Contact 3-30
Group 3-34
One Touch Key 3-37
E-mail Settings 2-65
E-mail Subject/Body 6-82
Default 8-20
Emulation 11-34
Selection 8-40
Emulation Upgrade Kit 11-7
Encrypted PDF Password 6-85
Energy Saver Recovery Level 2-40, 8-70
Energy Saving Control Function 1-18
Energy Star (ENERGY STAR®) Program 1-18
Enhanced WSD 11-34
Protocol Settings 8-58
Enhanced WSD over SSL
Protocol Settings 8-58
Enter key 2-24
Entering Numbers 2-23
Entry
File Name 6-71
Subject 6-82
Envelope Feed Guide 3-10
Envelope Stack Guide 3-18
Envelopes 11-18
Environment 1-3
Erase Shadowed Areas 6-57
Error Clear Timer 8-69
Error Handling 8-16
Duplexing Error 8-16
Finished Pages Exceeded 8-16
Finishing Error 8-16
Inserted Paper Mismatch 8-17
No Staple Error 8-16
Paper Jam before Staple 8-17
Paper Mismatch Error 8-16
Punch Waste Full Error 8-16
eSCL
Protocol Settings 8-58
eSCL over SSL
Protocol Settings 8-58

F

FAX 8-40
FAX Kit 11-6
FAX RX Result Report 8-44
Fiery Controller 11-6
File
Format 6-77
PDF 6-79
Separation 6-81
File Format 6-77
Default 8-19
File Management Utility 5-39
File Name Entry 6-71
Default 8-20
File Separation 6-81
Default 8-21
File Size Confirmation 6-83
Finisher Tray 2-5
First Copy Time 11-24
First Print Time 11-25
FMU Connection 5-39
Fold 6-24
Folding Tray 2-5
Folding Unit 11-4
Form Overlay 6-56
Storing a Form 5-65
Front Cover 2-2
FTP 11-34
FTP Client (Transmission)
Protocol Settings 8-55
FTP Encrypted TX 6-83
FTP Server (Reception)
Protocol Settings 8-55
Function Key Assignment 2-12, 8-32
Functions Key 2-19

G

Glossary 11-33
Google Cloud Print 4-16
GPL/LGPL 1-13
Grayscale 11-34
Group Authorization Settings 9-20
Group Authorization 9-20
Group List 9-21
Guest Authorization Set. 9-23
Guest Authorization 9-23
Guest Property 9-24
Guides Provided with the Machine xx

H

Handles 2-2
Hard Disk/SSD Initialization 8-64
Help 11-34
Help Screen 2-25
Highlighter 6-31
Home 8-32
Customize Desktop 2-15
Customize Taskbar 2-15
Wallpaper 2-15
Home Screen 2-14
Host Name 8-48
HTTP
Protocol Settings 8-57
HTTPS
Protocol Settings 8-57
Hue Adjustment 6-35

I

i-FAX
Protocol Settings 8-56
Image Repeat 6-62
Inner Finisher 11-5
Inner Tray 2-2

Insert Sheets/Chapters 6-59
Install
Macintosh 2-53
Software 2-45
Uninstalling 2-51
Windows 2-46
Interface Block Setting 8-63
Internet 8-75
Proxy 8-59
Internet Browser 5-71
Internet FAX Kit 11-6
Interrupt Copy 5-23
IP Address 11-34
Settings 8-49, 8-53
IPP 11-35
Protocol Settings 8-57
IPP over SSL
Protocol Settings 8-57
IPSec 8-55

J

Job
Available Status 7-2
Canceling 7-11
Checking History 7-9
Checking Status 7-2
Detailed Information 7-8
Detailed Information of Histories 7-10
Details of the Status Screens 7-3
Displaying History Screen 7-10
Displaying Status Screens 7-2
Pause and Resumption 7-11
Priority Override 7-11
Reordering Print Jobs 7-12
Sending the Log History 7-10, 8-45
Job Accounting 9-34
Adding an Account 9-37
Apply Limit 9-53
Copier/Printer Count 9-54
Counting the Number of Pages Printed 9-49
Default Setting 9-46
Deleting an Account 9-41
Editing an Account 9-40
Enabling Job Accounting 9-35
FAX Driver 9-45
Job Accounting Access 9-36
Login 9-52
Logout 9-52
Overview of Job Accounting 9-34
Print Accounting Report 9-51
Printing 9-42
Restricting the Use of the Machine 9-39
TWAIN 9-43
WIA 9-44
Job Box 4-18, 5-65, 11-35
Deletion of Job Retention 8-39
Form for Form Overlay 5-65
Private Print Box 4-19
Proof and Hold Box 4-22
Quick Copy Box 4-21
Quick Copy Job Retention 8-39
Repeat Copy Job Retention 8-39
Specifying the Job Box from a Computer and Storing the Job 4-18
Stored Job Box 4-20
Job Finish Notice 6-70
Job Finish Notice Setting 8-44
Job Separator 11-5
Job Separator Tray 2-2, 2-5
JPEG/TIFF Print 6-85
Default 8-20

K

Key Counter 11-5
Keyboard Holder 11-6
Keyboard Layout 8-11
Knopflerfish License 1-15
KPDL 11-35

L

Label 11-17
LAN Cable 2-6
Connecting 2-7
LAN Interface 8-50
Language 8-10
Large Capacity Feeder (1,500-sheet×2) 11-4
Loading Paper 3-14
Laser Scanner Cleaning 8-74, 10-56
LDAP
Protocol Settings 8-57
Legal Information 1-12
Legal Restriction on Copying 1-10
Legal Restriction on Scanning 1-10
Limited Use of This Product 1-11
Loading Originals 5-2
Loading Originals in the Document Processor 5-4
Placing Originals on the Platen 5-2
Loading Paper 10-9
Local Authorization 9-19
Login 2-27
Logout 2-28
Long Original 6-84
Low Power Mode 2-39
Low Power Timer 8-69
Low Toner Alert Level 8-29
LPD
Protocol Settings 8-56

M

Magnifying the View 2-26
Mailbox 11-4
Main Power Switch 2-2
Management 9-1

Manual Setting (IPv6) 8-50, 8-54
Manual Staple 5-73, 8-28
Margin 6-46
  Default 8-19
Margin/Centering 6-46
Measurement 8-15
Media Type Setting 8-15
Memo Page 6-60
Memory Diagnostics 8-73
Message Banner Print 8-30
Message Board Settings 8-31
Mirror Image 6-70
Mixed Size Originals 6-20
  Combinations 6-21
  Copy Size 6-22
Mixed Size Stapling 6-28
Monotype Imaging License Agreement 1-14
Mopria 4-16
MP Tray Setting
  Paper Size and Media Type 8-8
Multi Purpose Tray 2-2, 2-3, 11-35
  Loading Envelopes or Cardstock 5-9
  Loading Index Paper 5-9
  Loading Paper 5-7
  Paper Size and Media Type 8-8
Multi Sending 5-40

N

Negative Image 6-70
NetBEUI 11-35
  Protocol Settings 8-55
NetWare
  Settings 8-60
Network Interface 2-6
Network Interface Connector 2-4
Network Interface Kit 11-6
NFC
  Printing 4-17
  Settings 2-38, 8-66
Notice 1-2
Numeric Keypad Settings 8-32

O

OCR Scan Activation Kit 11-7
Offset Documents by Job 8-28
Offset One Page Documents 8-29
OHP Backing Sheet 6-73
One Touch Key
  Adding 3-37
  Deleting 3-38
  Editing 3-38
One-touch Image Adjust 6-36
OpenSSL License 1-13
Operation Panel 2-2
Option
  1,000-Sheet Finisher 11-4
  4,000-Sheet Finisher 11-4
  Banner Tray 11-5
  Card Authentication Kit 11-6
  Data Security Kit 11-6
  Document Processor (Dual Scan) 11-4
  Document Processor (Reverse Automatic) 11-4
  Document Table 11-5
  Emulation Upgrade Kit 11-7
  FAX Kit 11-6
  Fiery Controller 11-6
  Folding Unit 11-4
  Inner Finisher 11-5
  Internet FAX Kit 11-6
  Job Separator 11-5
  Key Counter 11-5
  Keyboard Holder 11-6
  Large Capacity Feeder (1,500-sheet×2) 11-4
  Mailbox 11-4
  Network Interface Kit 11-6
  OCR Scan Activation Kit 11-7
  Optional Numeric Keypad 11-5
  Overview 11-2
  Paper Feeder (500-sheet×2) 11-4
  Punch Unit 11-5
  Side Feeder (3,000-sheet) 11-4
  ThinPrint Option 11-6
  Wireless Network Interface Kit 11-6
Option Interface Slot 2-4
Optional Applications 11-8
Optional Function 8-66
Optional Network
  Basic 8-60
  Wireless Network 8-61
Optional Numeric Keypad 11-5
Orientation Confirmation 8-18
Original
  Auto Detect 8-13
  Custom Original Size 8-11
  Loading Originals 5-2
  Settings 8-11
  Size XXV, 6-18
Original Eject Table 2-2
Original Image 6-31
  Default 8-18
Original Orientation 6-23
  Default 8-18
Original Preview 2-20
Original Size 6-18
Original Size Indicator Plates 2-2
Original SSLeay License 1-13
Original Stopper 2-2, 5-6
Original Table 2-2
Original Width Guides 2-2
Original/Paper Settings 8-11
Outline font 11-35

P

Page # 6-57

Panel Reset Timer 8-69
Paper
Checking the Remaining Amount of Paper 7-14
Appropriate Paper 11-14
Custom Paper Size 8-12
Default Paper Source 8-12
Loading Cardstock 3-10, 5-9
Loading Envelopes 3-10, 5-9
Loading in the Large Capacity Feeder 3-14
Loading in the Side Feeder 3-16
Loading Index Paper 5-9
Loading Paper 3-2, 5-7
Loading Paper in the Cassette 1 3-4
Loading Paper in the Cassette 2 3-7
Loading Paper in the Multi Purpose Tray 5-7
Media for Auto 8-13
Media Type Setting 8-12
Paper Source for Cover 8-13
Precaution for Loading Paper 3-2
Selecting the Paper Feeder Units 3-3
Separator Paper Source 8-14
Settings 8-11
Show Paper Setup Message 8-14
Size and Media Type 8-7, 11-13
Special Paper 11-16
Special Paper Action 8-14
Specifications 11-13
Weight 8-15
Paper Feed Mode 8-42
Paper Feeder (500-sheet×2) 11-4
Paper Jams 10-57
1,000-Sheet Finisher 10-87
4,000-sheet Finisher (Inner) 10-90
4,000-sheet Finisher (Tray A) 10-91
4,000-sheet Finisher (Tray B) 10-95
Bridge Unit 10-81
Cassette 1 10-58
Cassette 2 10-61
Cassette 3 (1,500-sheet×2) 10-66
Cassette 3 and 4 (500-sheet×2) 10-64
Cassette 4 (1,500-sheet×2) 10-68
Cassette 5 (Side Feeder) 10-71
Document Processor (Dual Scan) 10-86
Document Processor (Reverse Automatic) 10-84
Folding Tray 10-103
Folding Unit 10-98
Inner Finisher 10-83
Jam Location Indicators 10-57
Mailbox 10-82
Multi Purpose Tray 10-73
Right Cover 1 10-74
Right Cover 2 (1,500-sheet×2) 10-79
Right Cover 2 (500-sheet×2) 10-78
Paper Length Guide 2-3, 3-4, 3-7
Paper Output 6-30, 8-17
Paper Selection 6-19
Paper Stopper 2-2, 3-18
Paper Width Adjusting Tab 2-3
Paper Width Guide 2-3, 3-5, 3-8
Part Names 2-2
PDF/A 11-35
PIN Code Authorization 9-32
Ping 8-59
Platen 2-2
POP3 11-35
POP3 (E-mail RX)
Protocol Settings 8-55
Poster 6-61
PostScript 11-35
Power Cable
Connecting 2-8
Power Management 1-18
Power Off 2-9
Power On 2-9
Power Switch 2-2
PPM 11-35
Precaution for Loading Paper 3-2
Precautions for Use 1-4
Preprinted Paper 11-19
Prevent Bleed-thru 6-40
Default 8-19
Prevent Light Reflection 8-32
Primary Network (Client) 8-62
Print Report
Font List 8-43
Network Status 8-43
Optional Network Status 8-44
Service Status 8-44
Status Page 8-43
Print Settings 4-2
Printer 8-40
Auto Cassette Change 8-42
Color Setting 8-41
Copies 8-41
CR Action 8-41
Duplex 8-41
EcoPrint 8-41
Emulation 8-40
Form Feed TimeOut 8-41
Gloss Mode 8-41
Job Name 8-42
KIR 8-42
LF Action 8-41
MP Tray Priority 8-42
Orientation 8-41
Override A4/Letter 8-41
Paper Feed Mode 8-42
Print Setting 4-2
Resolution 8-42
Toner Save Level (EcoPrint) 8-41
User Name 8-42
Wide A4 8-42
Printer Driver 11-36
Changing the Default Printer Driver Settings 4-3
Help 4-3
Print Settings 4-2
Printing Documents Stored in Removable USB Memory 5-67

Printing from PC 4-4
Banner Printing 4-9
Non-standard Sized Paper 4-6
Standard Sized Paper 4-4
Printing Speed 11-25
Priority Override 6-71, 7-11
Product Library xxi
Program 5-11
Deleting 5-13
Editing 5-13
Recalling 5-12
Registering 5-12
Proof Copy 5-22
Punch 6-28
Punch Unit 11-5

Q

Quick No. Search key 2-24
Quick Setup Registration 8-33, 8-34, 8-40
Quick Setup Wizard 2-42

R

RA (Stateless) 11-36
Settings 8-50, 8-54
RAM Disk 11-36
Raw
Protocol Settings 8-57
Recycled Paper 11-19
Regarding Trade Names 1-12
Regular Maintenance 10-2
Remote Printing 8-31
Repeat Copy 6-72
Default 8-21
Printing 5-65
Repeat Copy Job Retention 8-39
Replace the Waste Toner Box 10-7
Replacing Staples
1,000-Sheet Finisher 10-12
4,000-Sheet Finisher 10-13
Folding Unit 10-15
Inner Finisher 10-10
Report 8-43
Admin Report Settings 8-44
Device Log History Settings 8-46
Login History Settings 8-45
Print Report 8-43
Result Report Settings 8-44
Secure Comm. Error Log 8-47
Sending Log History 8-45
Resolution 6-81, 8-42, 11-24, 11-25
Resource Saving - Paper 1-18
Responding to Messages 10-32
Restart Entire Device 8-66
Restart Network 8-54, 8-59
Right Cover 1 2-3
Right Cover 1 Lever 2-3
RX Result Report Type 8-44

S

Safety Conventions in This Guide 1-2
Saturation 6-39
Saving Documents to USB Memory 5-69
Scan Resolution 6-81
Default 8-18
Scan to Folder (FTP) 5-29
Scan to Folder (SMB) 5-26
Security Level 8-63
Security Precautions when Using Wireless LAN 1-10
Send and Forward
File format 8-36
PDF Encryption Functions 8-37
Send and Print 6-82
Send and Store 6-82
Send as E-mail 5-25, 11-36
Send Result Report 8-44
Send Settings 8-34
Broadcast 8-35
Color Type 8-34
Default Screen 8-34
Dest. Check before Send 8-34
Entry Check for New Dest. 8-34
HighCompressionPDF Mode 8-36
New Destination Entry 8-35
OCR Text Recognition Act. 8-36
Quick Setup Registration 8-34
Recall Destination 8-35
Send and Forward 8-35
Send to Me (E-mail) 5-41
Sending 5-24
Preparation for Sending a Document to a PC 3-20
Sending Document to Desired Shared Folder on a Computer 5-26
Sending Size 6-76
Setting Date and Time 2-29
Sharpness 6-38
Shortcuts 5-18
Adding 5-18
Deleting Shortcuts 5-19
Editing Shortcuts 5-19
Show Power Off Message 8-32
Side Feeder (3,000-sheet) 11-4
Loading Paper 3-16
Silent Mode 8-73
Simple Login 2-28
Simple Login Settings
Simple Login 9-28
Simple Login Setup 9-29
Skip Blank Page 6-74
Default 8-21
Sleep 2-39
Sleep Level 2-40, 8-70
Energy Saver 8-70
Quick Recovery 8-70
Sleep Rules 2-40, 8-70
Sleep Timer 8-69
Slit Glass 2-2
SMB Client (Transmission)
Protocol Settings 8-55

SMTP 11-36
SMTP (E-mail TX)
Protocol Settings 8-55
SNMPv1/v2c
Protocol Settings 8-58
SNMPv3
Protocol Settings 8-58
Software Verification 8-65
Solving Malfunctions 10-23
Sound 8-10
Specifications 11-20
1,000-Sheet Finisher 11-29
4,000-Sheet Finisher 11-29
Banner Tray 11-32
Copy Functions 11-23
Document Processor 11-26
Folding Unit 11-31
Inner Finisher 11-28
Job Separator Tray 11-31
Large Capacity Feeder (1,500-sheet×2) 11-27
Machine 11-20
Mailbox 11-30
Paper Feeder (500-sheet×2) 11-27
Printer Functions 11-25
Punch Unit (For 1,000-Sheet/4,000-Sheet Finisher) 11-30
Punch Unit (For Inner Finisher) 11-28
Scanner Functions 11-26
Side Feeder (3,000-sheet) 11-28
SSL
Security Settings 8-59
Stack Level Adjuster 3-19
Staple Jam
1,000-Sheet Finisher 10-110
4,000-Sheet Finisher 10-113
Folding Unit 10-115
Inner Finisher 10-108
Staple/Punch 6-26
Status Monitor 4-23
Accessing 4-23
Exiting 4-23
Notification Settings 4-26
Status Page 11-36
Status/Job Cancel 7-1
Storing Size 6-84
Subnet Mask 11-36
Settings 8-49, 8-53
Supplies
Checking the Remaining Amount 7-14
Support Tray Section of the Multi Purpose Tray 2-3
Symbols 1-2
System Initialization 8-73
System Menu 8-2
Adjustment/Maintenance 8-72
Application 8-75
Cassette/MP Tray Settings 8-7
Common Settings 8-10
Copy 8-33
Counter 2-58
Date/Timer/Energy Saver 8-68
Document Box/Removable Memory 8-39
Edit Destination 8-67
FAX 8-40
Home 2-14
Internet 8-75
Operation Method 8-2
Printer 8-40
Quick Setup Wizard 2-42
Report 8-43
Send 8-34
System/Network 8-48
User Login/Job Accounting 8-68
User Property 8-68, 9-13
System Stamp 8-22
System/Network 8-48
Bluetooth Settings 8-66
Data Security 8-64
Interface Block Setting 8-63
Network 8-48
NFC 8-66
Optional Function 8-66
Optional Network 8-60
Primary Network (Client) 8-62
Restart Entire Device 8-66
Security Level 8-63

T

TCP/IP 11-36
Settings 8-49, 8-53
TCP/IP (IPv4)
Settings 2-30, 8-49, 8-53
TCP/IP (IPv6) 11-34
Settings 8-50, 8-54
Text Stamp 6-63
Thick Paper 11-18
Thin Print over SSL
Protocol Settings 8-56
ThinPrint
Protocol Settings 8-56
ThinPrint Option 11-6
Time Zone 8-68
Tone Curve Adjustment 8-73, 10-54
Toner Container (Black) 2-4
Toner Container (Cyan) 2-4
Toner Container (Magenta) 2-4
Toner Container (Yellow) 2-4
Toner Container Replacement 10-4
Toner Waste Full Alert 8-29
Touch Panel 2-14
Transparencies 11-16
Trapping 6-40
Default 8-21

Tray 1 to 7 2-5
Tray A 2-5
Tray B 2-5
Troubleshooting 10-23
Color Printing Trouble 10-31
Machine Operation Trouble 10-23
Printed Image Trouble 10-28
Solving Malfunctions 10-23
TWAIN 11-37
Scanning 5-31
Setting TWAIN Driver 2-55

U

USB 11-37
USB Cable 2-6
Connecting 2-8
USB Interface 2-6
USB Interface Connector 2-4
USB Keyboard Type 8-21
USB Memory
Check the Information 5-70
Printing 5-67
Remove 5-70
Save 5-69
USB Memory Slot 2-2
USB Port 2-4
User Login Administration 9-2
Adding a User 9-8
Changing User Properties 9-12
Enabling User Login Administration 9-3
FAX Driver 9-18
Group Authorization Settings 9-20
Guest Authorization Set. 9-23
ID Card Settings 9-31
Local Authentication 9-19
Login 2-27
Logout 2-28
Obtain NW User Property 9-26
Overview of User Login Administration 9-2
Password Policy Settings 9-7
PIN Code Authentication 9-32
Printing 9-15
Simple Login Settings 9-28
TWAIN 9-16
User Account Lockout Setting 9-5
WIA 9-17
User Login/Job Accounting 8-68
Job Accounting 9-34
Unknown User Settings 9-55
User Login 9-2
User Property 8-68

W

Waste Toner Box 2-4
Waste Toner Box Cover 2-2, 2-4
Weekly Timer Settings 2-40, 8-71
White space 6-60
WIA 11-37
Scanning 5-31
Setting WIA Driver 2-57
Wide A4 8-42
Wi-Fi
Settings 2-32, 8-51
Wi-Fi Direct
Printing 4-16
Settings 2-36, 8-51
Wireless Connection 1-10
Wireless Network
Settings 2-32, 8-61
Wireless Network Interface Kit 11-6
WPS (Wi-Fi Protected Setup) 11-37
WSD Print
Protocol Settings 8-56
WSD Scan 5-34
Protocol Settings 8-56

X

XPS Fit to Page 6-85
Default 8-20

Z

Zoom 6-41
Default 8-19


QUALITY
CERTIFICATE
This machine has passed
all quality controls and
final inspection

KYOCERA Document Solutions America, Inc.

Headquarters
225 Sand Road,
Fairfield, New Jersey 07004-0008, USA
Phone: +1-973-808-8444
Fax: +1-973-882-6000

Latin America
8240 NW 52nd Terrace Dawson Building, Suite 100
Miami, Florida 33166, USA
Phone: +1-305-421-6640
Fax: +1-305-421-6666

KYOCERA Document Solutions Canada, Ltd.
6120 Kestrel Rd., Mississauga, ON L5T 1S8,
Canada
Phone: +1-905-670-4425
Fax: +1-905-670-8116

KYOCERA Document Solutions
Mexico, S.A. de C.V.
Calle Arquimedes No. 130, 4 Piso, Colonia Polanco
Chapultepec, Delegacion Miguel Hidalgo,
Distrito Federal, C.P. 11560, México
Phone: +52-555-383-2741
Fax: +52-555-383-7804

KYOCERA Document Solutions Brazil, Ltda.
Alameda África, 545, Pólo Empresarial Consbrás,
Tamboré, Santana de Parnaíba, State of São Paulo, CEP
06543-306, Brazil
Phone: +55-11-2424-5353
Fax: +55-11-2424-5304

KYOCERA Document Solutions Chile SpA
Jose Ananias 505, Macul. Santiago, Chile
Phone: +562-2350-7000
Fax: +562-2350-7150

KYOCERA Document Solutions
Australia Pty. Ltd.
Level 3, 6-10 Talavera Road North Ryde N.S.W, 2113,
Australia
Phone: +61-2-9888-9999
Fax: +61-2-9888-9588

KYOCERA Document Solutions
New Zealand Ltd.
Ground Floor, 19 Byron Avenue, Takapuna, Auckland,
New Zealand
Phone: +64-9-415-4517
Fax: +64-9-415-4597

KYOCERA Document Solutions Asia Limited
Unit 3 & 5, 16/F.,Mita Centre, 552-566, Castle Peak Road
Tsuen Wan, New Territories, Hong Kong
Phone: +852-2496-5678
Fax: +852-2610-2063

KYOCERA Document Solutions
(China) Corporation
8F, No. 288 Nanjing Road West, Huangpu District,
Shanghai,200003, China
Phone: +86-21-5301-1777
Fax: +86-21-5302-8300

KYOCERA Document Solutions
(Thailand) Corp., Ltd.
335 Ratchadapisek Road, Wongsawang, Bangsue,
Bangkok 10800,
Thailand
Phone: +66-2-586-0333
Fax: +66-2-586-0278

KYOCERA Document Solutions
Singapore Pte. Ltd.
12 Tai Seng Street #04-01A,
Luxasia Building, Singapore 534118
Phone: +65-6741-8733
Fax: +65-6748-3788

KYOCERA Document Solutions
Hong Kong Limited
Unit 1,2,4,6,8 & 10, 16/F.,Mita Centre, 552-566, Castle
Peak Road Tsuen Wan, New Territories, Hong Kong
Phone: +852-3582-4000
Fax: +852-3185-1399

KYOCERA Document Solutions
Taiwan Corporation
6F., No.37, Sec. 3, Minquan E. Rd.,
Zhongshan Dist., Taipei 104, Taiwan R.O.C.
Phone: +886-2-2507-6709
Fax: +886-2-2507-8432

KYOCERA Document Solutions Korea Co., Ltd.
#3F Daewoo Foundation Bldg 18, Toegye-ro, Jung-gu,
Seoul, Korea
Phone: +822-6933-4050
Fax: +822-747-0084

KYOCERA Document Solutions
India Private Limited
Second Floor, Centrum Plaza, Golf Course Road,
Sector-53, Gurgaon, Haryana 122002, India
Phone: +91-0124-4671000
Fax: +91-0124-4671001

KYOCERA Document Solutions Europe B.V.
Bloemlaan 4, 2132 NP Hoofddorp,
The Netherlands
Phone: +31-20-654-0000
Fax: +31-20-653-1256

KYOCERA Document Solutions Nederland B.V.
Beechavenue 25, 1119 RA Schiphol-Rijk,
The Netherlands
Phone: +31-20-5877200
Fax: +31-20-5877260

KYOCERA Document Solutions (U.K.) Limited
Eldon Court, 75-77 London Road,
Reading, Berkshire RG1 5BS,
United Kingdom
Phone: +44-118-931-1500
Fax: +44-118-931-1108

KYOCERA Document Solutions Italia S.p.A.
Via Monfalcone 15, 20132, Milano, Italy,
Phone: +39-02-921791
Fax: +39-02-92179-600

KYOCERA Document Solutions Belgium N.V.
Sint-Martinusweg 199-201 1930 Zaventem,
Belgium
Phone: +32-2-7209270
Fax: +32-2-7208748

KYOCERA Document Solutions France S.A.S.
Espace Technologique de St Aubin
Route de l'Orme 91195 Gif-sur-Yvette CEDEX,
France
Phone: +33-1-69852600
Fax: +33-1-69853409

KYOCERA Document Solutions Espana, S.A.
Edificio Kyocera, Avda. de Manacor No.2,
28290 Las Matas (Madrid), Spain
Phone: +34-91-6318392
Fax: +34-91-6318219

KYOCERA Document Solutions Finland Oy
Atomitie 5C, 00370 Helsinki,
Finland
Phone: +358-9-47805200
Fax: +358-9-47805390

KYOCERA Document Solutions Europe B.V., Amsterdam (NL) Zürich Branch
Hohlstrasse 614, 8048 Zürich,
Switzerland
Phone: +41-44-9084949
Fax: +41-44-9084950

KYOCERA Bilgitas Document Solutions Turkey A.S.
Gülbahar Mahallesi Otello Kamil Sk. No:6 Mecidiyeköy
34394 Şişli İstanbul, Turkey
Phone: +90-212-356-7000
Fax: +90-212-356-6725

KYOCERA Document Solutions Deutschland GmbH
Otto-Hahn-Strasse 12, 40670 Meerbusch,
Germany
Phone: +49-2159-9180
Fax: +49-2159-918100

KYOCERA Document Solutions Austria GmbH
Altmannsdorferstraße 91, Stiege 1, 2. OG, Top 1, 1120,
Wien, Austria
Phone: +43-1-863380
Fax: +43-1-86338-400

KYOCERA Document Solutions Nordic AB
Esbogatan 16B 164 75 Kista, Sweden
Phone: +46-8-546-550-00
Fax: +46-8-546-550-10

KYOCERA Document Solutions Norge Nuf
Olaf Helsetsv. 6, 0619 Oslo, Norway
Phone: +47-22-62-73-00
Fax: +47-22-62-72-00

KYOCERA Document Solutions Danmark A/S
Ejby Industrivej 60, DK-2600 Glostrup,
Denmark
Phone: +45-70223880
Fax: +45-45765850

KYOCERA Document Solutions Portugal Lda.
Rua do Centro Cultural, 41 (Alvalade) 1700-106 Lisboa,
Portugal
Phone: +351-21-843-6780
Fax: +351-21-849-3312

KYOCERA Document Solutions South Africa (Pty) Ltd.
KYOCERA House, Hertford Office Park,
90 Bekker Road (Cnr. Allandale), Midrand, South Africa
Phone: +27-11-540-2600
Fax: +27-11-466-3050

KYOCERA Document Solutions Russia LLC.
Building 2, 51/4, Schepkina St., 129110, Moscow,
Russia
Phone: +7(495)741-0004
Fax: +7(495)741-0018

KYOCERA Document Solutions Middle East
Dubai Internet City, Bldg. 17,
Office 157 P.O. Box 500817, Dubai,
United Arab Emirates
Phone: +971-04-433-0412

KYOCERA Document Solutions Inc.
2-28, 1-chome, Tamatsukuri, Chuo-ku
Osaka 540-8585, Japan
Phone: +81-6-6764-3555
http://www.kyoceradocumentsolutions.com

© 2018 KYOCERA Document Solutions Inc.
KYOCERA is a trademark of KYOCERA Corporation



KYOCERA
Document Solutions

Rev.4 2018.1
2NDKDEN204